UNITED STATES
DEPARTMENT OF THE INTERIOR

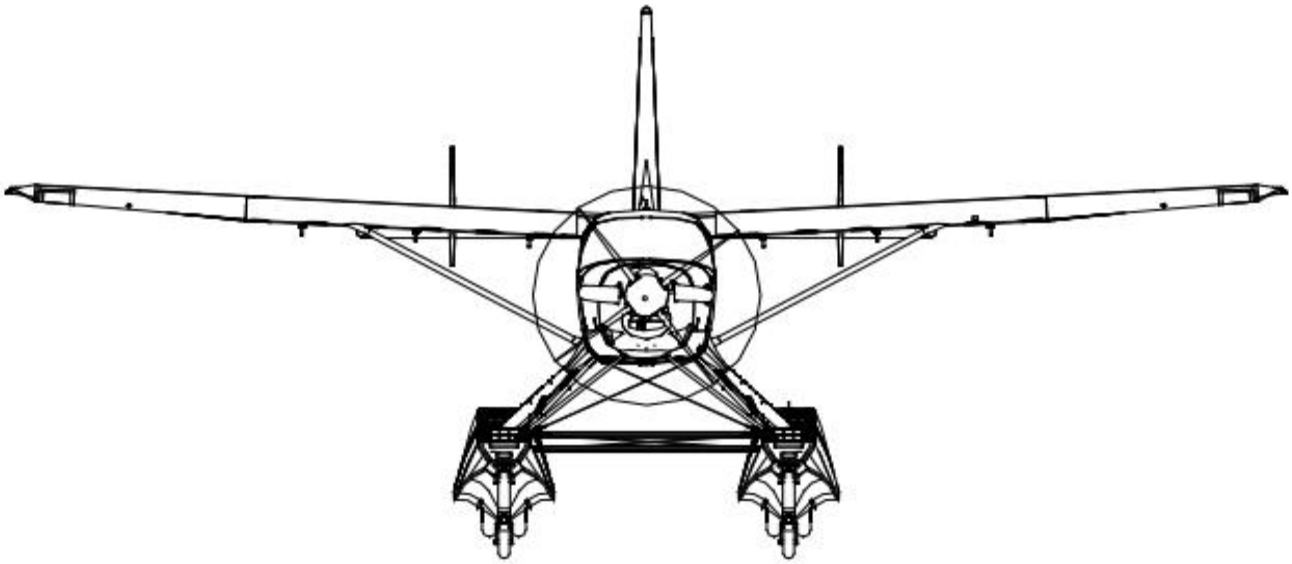

KODIAK 100 SERIES

SCHEDULED MAINTENANCE CHECKS

NOTE: THE INSPECTION WORK SHEETS / PACKAGES IN THIS DOCUMENT ARE FOR THE 'UNITED STATES DEPARTMENT OF THE INTERIOR' AIRCRAFT ONLY.

REV. 00
DATE: 20 JUNE 2016

UNITED STATES

DEPARTMENT OF THE INTERIOR

KODIAK 100 SERIES

SCHEDULED MAINTENANCE CHECKS

UNITED STATES

DEPARTMENT OF THE INTERIOR

KODIAK 100 SERIES

SCHEDULED MAINTENANCE CHECKS

UNITED STATES

DEPARTMENT OF THE INTERIOR

KODIAK 100 SERIES

SCHEDULED MAINTENANCE CHECKS

This Kodiak 100 Series inspection program document has been compiled to meet or exceed the requirements of the Department of the Interior - Departmental Manual (Aviation Policy) and Code of Federal Regulations, Title 14, Chapter 1, Subchapter C, Part 43 Appendix D. – 'Scope and detail of items (as applicable to the particular aircraft) to be included in Annual and 100 Hour Inspections'. FAR Part 43.15 (c) provides the authority for Dept. of the Interior as owner/operator to issue a checklist of its own design to comply with or exceed the contents of FAR Part 43 Appendix D. Dept. of the interior has incorporated and/or condensed all line items from the relevant Kodiak 100 Series Maintenance Manuals to include inspections based on hours, annual, and multi-year based structural inspections. Compilation of this document was carried out by Turbo Air Inc. of 4000 S. Orchard St. Boise Idaho 83705 for the Department of the Interior (Office of Aviation Services) 300 E Mallard Drive. Ste 200 Boise, Idaho 83705. Under the guidance of Part 91.403, 405, 409, 415 and Part 43.15(a) (1) & (c) FAA approval is not required (or offered) for issue of this document. This is a controlled document and amendment status shall be updated on the record of revisions page.

Personnel carrying out maintenance on Dept. of the Interior aircraft and using this inspection program must ensure that by signing for the listed tasks, they have complied with the latest revision of CFR Part 43 Appendix D.

This is to certify that the contents of this inspection program have been condensed from the relevant Kodiak 100 Series Inspection programs and meets or exceeds the requirements of CFR Part 43 Appendix D at the time of writing.

Date 6/20/2016

General Manager, Turbo Air Inc.

Date 6/20/2016

Fleet Manager, U.S. Dept. of the Interior (Office of Aviation Services)

DOI - KODIAK 100 SERIES
RECORD OF REVISIONS

REVISION No.	PAGE NUMBER	ISSUE DATE	INSERTION DATE	INSERTED BY	REMOVAL DATE	REMOVED BY

DOI - KODIAK 100 SERIES
RECORD OF TEMPORARY REVISIONS

REVISION No.	PAGE NUMBER	ISSUE DATE	INSERTION DATE	INSERTED BY	REMOVAL DATE	REMOVED BY

INSTRUCTIONS

DOI – KODIAK 100 SERIES – SCHEDULED MAINTENANCE CHECKS

THE INSPECTION WORK SHEETS / PACKAGES IN THIS DOCUMENT ARE FOR THE
'UNITED STATES DEPARTMENT OF THE INTERIOR' AIRCRAFT ONLY.

Explanation of Terms

Hourly Inspections

100 Hr. Inspection	100 Hrs. (Due at first 100 hours after an Annual)
200 Hr. Inspection	200 Hrs. (Due at second 100 hours after an Annual)
300 Hr. Inspection	300 Hrs. (Due at third 100 hours after an Annual)
400 Hr. Inspection	400 Hrs. (Due at fourth 100 hours after an Annual)
Annual Inspection	Every 12 Months

Inspection Intervals

Hourly: All required inspections may be completed up to +10% percent of their due time (i.e.: A 50 hour inspection may be completed between 50 and 55 hours time in service). Flight beyond the due time must be approved by the administrator. Flight beyond the 10 % limit is not permitted for any reason.

All inspections shall be done at the next standard interval (i.e.: 50hrs) from when the previous inspection was due provided that inspection was completed within the +10% time due. The 50 hr. check is due at 50 hrs. and the next is due at 100hrs. All inspections will be handled as described above. The +10% is to be used primarily for ferry flights to where maintenance can be performed.

Calendar: All required inspections may be completed up to their calendar due time. Flight beyond the calendar time is not permitted for any reason.

Note: Selected items that are normally controlled separately (on computer) (i.e.: overhauls, component function checks, etc.) have been omitted from this inspection work package and must be controlled separately. See computerized maintenance program for "Controlled Items".

Note: This inspection package must be updated as new revisions to the maintenance program are issued.

Inspections: To be completed in accordance with this manual.

Repairs: To be completed in accordance with the appropriate Kodiak Maintenance Manual.

Climate Zone Supplemental Inspections and Servicing

Before commencing inspection and servicing, it must be confirmed which climate zone the subject aircraft is operated in. If the aircraft is above the 49th parallel it is in the Arctic Zone. If the aircraft is below the 49th parallel it is in the Temperate zone. The extra line items listed for the appropriate climate zone shall be added to the servicing, the not applicable climate zone line items shall be noted as N/A in the sign-off block.

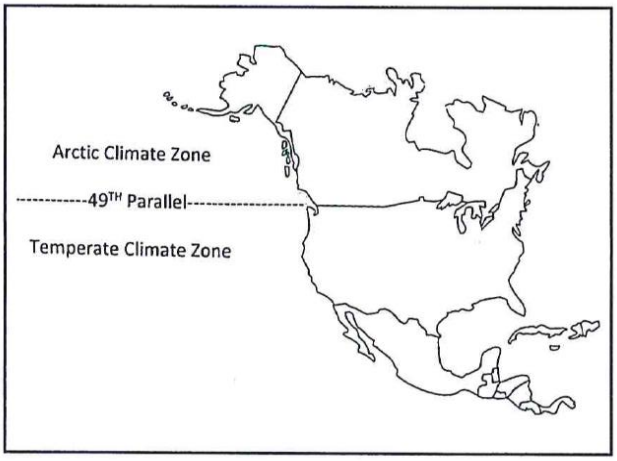

Dept. of the Interior Climate Zone Map

Acronyms in use

SID -	Supplemental Inspection Document	STC -	Supplemental Type Certificate
CPCP -	Corrosion Prevention and Control Program	PSE -	Principle Structural Element
NDI -	Non Destructive Inspection	N/A -	Not Applicable (see MECH Block D on next page)
ICA -	Inspection for Continued Airworthiness	OEM -	Original Equipment Manufacturer
		IAW -	In Accordance With

Inspection Sheet - Block Explanation

Example

ACFT TYPE		EXAMPLE INSPECTION REQUIREMENTS	MECH	INSP
ALL	1	PY and P3 Line Heater Check: Perform an operational check of PY and P3 heaters.		
ALL	2	Conduct engine run-up checks as described below.		
ALL	3	EPA and Oil Drain Sump Cans: (If Equipped) Inspect can for leakage, condition, and security of installation. Completely drain can.	N/A	
A	**B**	**C**	**D**	**E**

Block A All - All Kodiak 100 Series aircraft.

Block B Each inspection and task is given a line item number in the 2nd column.

Block C Describes inspection tasks.

Block D Mechanic sign-off block.
N/A (Not Applicable) - should be used if the inspection cannot or should not be carried out due to (but not limited to) -

1. Serial number range.
2. Unit or option not installed on aircraft.
3. Previously complied with.
4. Climate zone applicability.

A note beside the N/A to indicate the reason for it is recommended.

Block E
The (white) INSP block should be initialed by an inspector who witnessed the task carried out by the mechanic and completed a final inspection and/or functional check in accordance with the line item requirements and relevant technical publications. The inspector shall not initial the INSP block until after the mechanic has initialed the MECH block. In a block that requires a Maintenance Inspector, he shall initial the white INSP block whenever N/A has been entered in the MECH block.

INSPECTION MANUAL ORIGINAL

UNITED STATES DEPARTMENT OF THE INTERIOR

KODIAK 100 SERIES

100 HOUR SCHEDULED MAINTENANCE CHECKS

THE INSPECTION WORK SHEETS / PACKAGES IN THIS DOCUMENT ARE FOR THE 'UNITED STATES DEPARTMENT OF THE INTERIOR' AIRCRAFT ONLY.

Inspection Sheet - Block Explanation

Example

ACFT TYPE		EXAMPLE INSPECTION REQUIREMENTS	MECH	INSP
ALL	1	PY and P3 Line Heater Check: Perform an operational check of PY and P3 heaters.		
ALL	2	Conduct engine run-up checks as described below.		
ALL	3	EPA and Oil Drain Sump Cans: (If Equipped) Inspect can for leakage, condition, and security of installation. Completely drain can.	N/A	
A	**B**	**C**	**D**	**E**

Block A All - All Kodiak 100 Series aircraft.

Block B Each inspection and task is given a line item number in the 2nd column.

Block C Describes inspection tasks.

Block D Mechanic sign-off block.
N/A (Not Applicable) - should be used if the inspection cannot or should not be carried out due to (but not limited to) -

1. Serial number range.
2. Unit or option not installed on aircraft.
3. Previously complied with.
4. Climate zone applicability.

A note beside the N/A to indicate the reason for it is recommended.

Block E
The (white) INSP block should be initialed by an inspector who witnessed the task carried out by the mechanic and completed a final inspection and/or functional check in accordance with the line item requirements and relevant technical publications. The inspector shall not initial the INSP block until after the mechanic has initialed the MECH block. In a block that requires a Maintenance Inspector, he shall initial the white INSP block whenever N/A has been entered in the MECH block.

Climate Zone Supplemental Inspections and Servicing

Before commencing inspection and servicing, it must be confirmed which climate zone the subject aircraft is operated in. If the aircraft is above the 49th parallel it is in the Arctic Zone. If the aircraft is below the 49th parallel it is in the Temperate zone. The extra line items listed for the appropriate climate zone shall be added to the servicing, the not applicable climate zone line items shall be noted as N/A in the sign-off block.

Inspections: To be completed in accordance with this manual.

Repairs: To be completed in accordance with the appropriate Kodiak Maintenance Manual.

Acronyms in use

SID - Supplemental Inspection Document

CPCP - Corrosion Prevention and Control Program

NDI - Non Destructive Inspection

ICA - Inspection for Continued Airworthiness

STC - Supplemental Type Certificate

PSE - Principle Structural Element

N/A - Not Applicable (see MECH Block D above)

OEM - Original Equipment Manufacturer

IAW - In Accordance With

DOI - KODIAK 100 SERIES - 100 HOUR INSPECTION

'N' NUMBER:_____ MODEL: _____ AIRCRAFT S/N:_____

TACH HOURS:_____ AIRCRAFT TOTAL TIME:_____ ENG. SMOH:_____ PROP SMOH:_____

ACFT TYPE		100 HOUR INSPECTION REQUIREMENTS	MECH	INSP
ALL	1	Remove cowling, inspection plates, and all fairings as necessary to perform the inspections called for on this form. Thoroughly clean the aircraft and engine as instructed below.		

TITLE:	Window and Windshield Cleaning Procedures	MECH	INSP
INSPECTION INSTRUCTIONS	**CAUTION:** Windows and windshields are easily damaged if handled improperly.		
	1. Position the aircraft inside a hangar or another suitable location to allow the aircraft surface to remain cool and out of direct sunlight.		
	2. Flood the window with clean water and feel by hand (jewelry removed) for potentially abrasive materials on the window surface.		
	3. Remove any abrasive matter from window surface by hand.		
	4. Wash the window surface with mild soap or detergent mixed with water. A clean cotton cloth may be used to transfer the soapy solution to the window surface but use extreme care to prevent scratching of the window surface.		
	5. If the contaminants on the surface of the window cannot be removed by the solution of mild soap and water, Type II Aliphatic Naphtha may be used as a cleaning agent. Apply the Type II Aliphatic Naphtha with a soft clean cotton cloth, and frequently refold the cloth to avoid scratching the windshield with any abrasive particles.		
	6. Rinse the window surface thoroughly with clean water and dry with a clean cotton cloth.		
	7. Hard polishing wax may be applied to the acrylic window surfaces using a clean soft cotton cloth. The polishing wax will mask most shallow scratches on the window surface.		

TITLE:	Aluminum Surface Cleaning Procedures	MECH	INSP
INSPECTION INSTRUCTIONS	Aluminum surfaces do not require extensive maintenance, but should not be neglected. The aircraft should be washed with clean water in order to remove any collected dirt. Non-alkaline grease solvents may be used to aide in the removal of oil and grease. There are various commercial grade cleaners available for aluminum surfaces.		

TITLE:	External Painted Surface Cleaning Procedures	MECH	INSP
INSPECTION INSTRUCTIONS	A. The painted surfaces on the aircraft can normally be kept bright by washing with a solution of soap and water, followed by a water-rinsing and then dried off with a clean dry cloth or chamois. Abrasive soaps or detergents should never be used due to their tendency to cause corrosion. Stubborn oil or grease spots can be removed with a cloth moistened with Stoddard solvent. Follow any cleaning procedure with a thorough rinse of the aircraft.		
	CAUTION: If equipped with the TKS Ice Protection System, don't polish the surface of the porous panels. Polish on the porous panels impairs the wetting qualities of the TKS and may degrade ice protection efficiency. Polishing may also block pores in the panels. See the TKS Ice Protection System Instructions for Continued Airworthiness.		
	B. To seal any minor scratches or chips and to protect the aircraft skins against corrosion, the aircraft should be waxed on a regular basis. A quality grade automotive wax containing a carnauba base should be used, and should be applied in accordance with the manufacturer's instructions. If the aircraft is operated around coastal waters or other salt water environments, it must be washed and waxed on a more frequent basis to help fight corrosion. Special attention should be given to protect and seal around the rivet heads, skin laps, piano hinges, and any other area susceptible to corrosion. A heavier coating of wax should be applied on the wing and tail leading edges, the engine cowling nose area, and the propeller spinner to help reduce abrasive wear in these areas. However, don't polish or wax porous panels on the leading edges of airplanes equipped with the TKS Ice Protection System. (See caution above.) Wax should be reapplied after cleaning the aircraft.		

TITLE:	Engine Compartment Cleaning		
		MECH	INSP
INSPECTION INSTRUCTIONS	A. Washing of the engine and its accessories should be accomplished routinely in order to remove oil, grease, corrosive salts, and other residue. A periodic cleaning should be accomplished during inspection periods to aid in discovering defects.		
	B. Protective equipment and clothing such as, a face shield, coveralls, and chemically-resistant gloves should be worn when working with strong cleaning agents. Use the least toxic cleaning agent that will effectively accomplish the task at hand.		
	CAUTION: Cover the aircraft's propeller in order to prevent any alkaline cleaner from coming in contact with it during washing procedures.		
	CAUTION: Do not use gasoline or other highly flammable materials for washing the aircraft or any of its components.		
	CAUTION: Do not wash the engine while it is still hot or while it is running. Allow the engine to cool down prior to cleaning.		
	C. Cleaning procedures should be performed in a well-ventilated area and fire fighting equipment should be readily available. No smoking and no open flames should be allowed within a 100 foot radius of the cleaning area. Compressed air should be set at the lowest effective pressure for use in drying, or as a cleaning agent. Steel wire brushes should not be used for cleaning the aircraft; a stiff, nylon or similar bristle brush may be used if one is needed to remove grease and grime.		

ACFT TYPE		**100 HOUR INSPECTION REQUIREMENTS**	MECH	INSP
ALL	2	Conduct engine run-up checks as instructed below.		

TITLE:	Engine Run-up Checks and Tests		
		MECH	INSP
INSPECTION INSTRUCTIONS	A. The following checklist is provided for performing engine run-ups for routine maintenance and inspection procedures.		
	CAUTION: Start and operate the engine per the Pilot's Operating Handbook/FAA Approved Flight Manual. Observe all power plant operating limitations.		
	NOTE: Refer to applicable Kodiak Manual for the Ground Performance Check Chart for the PT6A-34 engine.		

Reservoir Fuel Low/Fuel Selectors OFF Warning Test						
Control	Position	X	Results			
Engine	Start (IAW POH/AFM)					
Aux Buss	OFF					
Power Lever	IDLE					
Propeller Lever	MAX RPM					
Condition Lever	LOW IDLE					
Auxiliary Fuel Pump	ON					
Fuel Selector Controls	BOTH OFF		and Check:	Y	N	Comments:
			Fuel Selectors OFF Warning light above PFD1 Illuminates			
			Audible Chime Heard			
			FUEL OFF annunciator shown on PFD			
			RESERVOIR FUEL annunciator shown on PFD when fuel level in reservoir decreases			Delay no more than 10 minutes. **NOTE:** Continue with checklist while waiting for annunciator to appear.
Fuel Selector Controls	BOTH ON					

	MECH	INSP
Initials:		

DOI - KODIAK 100 SERIES - 100 HOUR INSPECTION

Electrical Power Check						
Control/System	Position/Condition	X	Results			
Power Lever	IDLE					
Propeller Lever	MAX RPM					
Condition Lever	LOW IDLE					
Generator	ON					
Alternator	ON		and Check:	Y	N	Comments:
			Note Alternator Amps			
			Note Generator Amps			
Left Pitot Heat	ON		and Check:	Y	N	Comments:
			Alternator amps increase with applied load			
Right Pitot Heat	ON		and Check:	Y	N	Comments:
			Generator amps increase with applied load			
			Check M Bus: 27.0V-28.2V			
Control/System	Position/Condition	X	Results			
Generator	OFF		and Check:	Y	N	Comments:
			Alternator and batteries carry entire electrical load.			
			GEN FAIL annunciator shown on PFD			
			M Bus: 24-25.5V (Depending on battery voltage)			
			E Bus: 28.3-29.1 V			
Generator	ON					
Alternator	OFF		and Check:	Y	N	Comments:
			Generator carries entire electrical load.			
			ALTERNATOR FL annunciator shown on PFD			
			M Bus: 27.0-28.2 V			
			E Bus: Approx.. 1 V less than Bus M volts			
Generator & Alternator	OFF		and Check:	Y	N	Comments:
			Batteries carry entire electrical load			
			ALTERNATOR FL annunciator shown on PFD			
			GEN FAIL annunciator shown on PFD			
Generator	ON					
Alternator	ON					

	MECH	INSP
Initials:		

Engine Idle Check						
Control/System	Position/Condition	X	Results			
Power Lever	IDLE					
Propeller Lever	MAX RPM					
Condition Lever	LOW IDLE		and Check:	Y	N	Comments:
			Electrical Load approx. 50 amps			
			Ng speed 52.5-55.5%			
Condition Lever	HIGH IDLE		and Check:	Y	N	Comments:
			Ng speed 68-72%			

	MECH	INSP
Initials:		

DOI - KODIAK 100 SERIES - 100 HOUR INSPECTION

Propeller Governor Operational Check								
Control/System	Position/Condition	X	Results					
Propeller Lever	MAX RPM							
Condition Lever	LOW IDLE							
Power Lever	ADVANCE until Np stabilizes at 2200 RPM +0/-10 RPM							
Power Lever	ADVANCE 10% Ng		and Check:	Y	N	Comments:		
			Np stabilizes at 2200 RPM					
Power Lever	IDLE							
Propeller Lever	LOW RPM							
Power Lever	ADVANCE until Np stabilizes at approximately 1900-2030 RMP							
Power Lever	ADVANCE 10% Ng		and Check:	Y	N	Comments:		
			Np stabilizes at 1900-2030 RPM					
Power Lever	IDLE							
Propeller Lever	MAX RPM						MECH	INSP
						Initials:		

Propeller Overspeed Governor Operational Check								
Control/System	Position/Condition	X	Results					
Propeller Lever	MAX RPM							
Overspeed Governor Test Switch	Press and Hold							
Power Lever	ADVANCE until Np stabilizes at 2070 RPM +/- 50 RPM							
Power Lever	ADVANCE Ng 10%		and Check:	Y	N	Comments:		
			Np stabilizes at 1900-2030 RPM					
Power Lever	IDLE							
Overspeed Governor Test Switch	Release							
Power Lever	ADVANCE		and Check:	Y	N	Comments:		
			Governor Limits to 2200 RPM				MECH	INSP
						Initials:		

Power Lever Reverse Ng Speed Pickup Check								
Control/System	Position/Condition	X	Results					
Propeller Lever	MAX RPM							
Condition Lever	HIGH IDLE		and Check:	Y	N	Comments:		
			Note Np RPM					
			Note Ng %					
Power Lever	Move slowly to BETA Range		and Check:	Y	N	Comments:		
			Note Np RPM					
			Note Ng %					
Power Lever	MAX REVERSE		and Check:	Y	N	Comments:		
			Max reverse torque is a minimum of 700 ft. lbs.					
			Propeller RPM does not exceed 2100 RPM					
Power Lever	IDLE		and Check:	Y	N	Comments:	MECH	INSP
						Initials:		

DOI - KODIAK 100 SERIES - 100 HOUR INSPECTION

Emergency Power Lever Annunciator Test						
Control/System	Position/Condition	X	Results			
Power Lever	IDLE					
Propeller Lever	MAX RPM					
Condition Lever	LOW IDLE					
Emergency Power Lever	Slowly ADVANCE		and Check:	Y	N	Comments:
			ITT, TRQ, and Ng limits at all time			
			Keep Ng increase at less than 4% per sec.			
			EMER PWR LVR annunciator shown on PFD			
Emergency Power Lever	SLOWLY increase Ng to 67% Ng					
Emergency Power Lever	SLOWLY reduce to NORMAL (Full Aft)		and Check:	Y	N	Comments:
			Keep Ng decrease at less than 4% per sec.			
			EMER PWR LVR annunciator extinguishes			
						MECH / INSP
			Initials:			

ACFT TYPE		**100 HOUR INSPECTION REQUIREMENTS**	MECH	INSP
ALL	3	Engine Inlet and Inertial Air Particle Separator (as equipped, either with Single-actuated or Dual actuated): Inspect for security of installation, condition and proper freedom of movement while accomplishing an operational check. Inspect door pivot points for proper condition. Check actuator(s) and linkage for proper operation and freedom of movement. Check for full opening of bypass door through inlet duct. Lubricate the separator actuators with LPS 1.		
ALL	4	Engine Cowling - for cracks, and defects.		
ALL	5	PY and P3 Line Heater Check: Perform an operational check of PY and P3 heaters.		
ALL	6	Igniters: Perform an operational check by turning on the master switch and ignition switch while verifying illumination of the IGNITION ON annunciator and proper function of both igniters.		
ALL	7	Flaps - Trim Compensation Unit Check: Perform a Pitch Trim Compensation Unit Functional Check.		
ALL	8	Elevator Trim Wheel and Indicator: Inspect the trim wheel for proper condition and security of installation. Operate the trim wheel and electric trim to verify proper function, freedom of movement and full range of motion. Verify the indicator functions properly. Perform an electric trim operational check in accordance with the POH/AFM.		
ALL	9	Autopilot Unit and Control Switches: Check for security of installation and proper operation. Perform an operational check of the autopilot system.		
ALL	10	Flap System: Perform an operational check of the flaps through their full range of travel. Inspect for loose rivets, corrosion, cracks, wrinkles, and dents. If so equipped, inspect vortex generators for condition and security. Inspect flap attach points for proper security and condition. Check flap operation for any erratic movement, interference, or binding. Check for proper operation of the flap position indicator.		
ALL	11	Aileron Trim Tab: Perform an operational check of the electric aileron trim system. Inspect ram attaching hardware for unusual wear and security of installation. Perform an Aileron Trim Tab vertical free play inspection (maximum allowed is 0.085").		
ALL	12	Pitot/Static Tube Heat: Operate the pitot heat for approximately 30 seconds and verify proper operation of pitot heat. Turn pitot tube heat OFF.		
ALL	13	Stall Warning System (If Equipped with a Stall Warning Computer): Perform an operational check of the lift transducer, stall warning horn, stall warning horn relay, and stall warning test switch. (Ground Check.)		
ALL	14	Stall Warning System (if not equipped with a Stall Warning Computer): Perform an operational check of the warning vane and horn. (Ground Check.)		
ALL	15	Exterior Lighting: Check for proper operation of beacon, strobe, NAV, taxi, pulse, and landing.		

DOI - KODIAK 100 SERIES - 100 HOUR INSPECTION

ACFT TYPE		100 HOUR INSPECTION REQUIREMENTS	MECH	INSP
ALL	16	Cabin Electrical Heating Units: Inspect for security of installation, Foreign objects, and signs of overheating. Perform an operational check.		
ALL	17	Exterior Fuselage: Inspect the exterior of the fuselage for general condition. Inspect skins for damage, corrosion, and loose or working fasteners.		
ALL	18	Exterior Placards and Markings: Verify presence, legibility, and security of attachment. See appropriate Kodiak Manual for requirements.		
ALL	19	Interior Placards and Markings: Verify presence, legibility, and security of attachment. See appropriate Kodiak Manual for requirements.		
ALL	20	Propeller Blades: Wash the blades, inspect for nicks, gouges, scratches, depressions, looseness, cracks, security, and condition. Refer to Hartzel Propeller Owner's Manual and Logbook (Manual No. 149) for further Instruction.		
ALL	21	Propeller Spinner: Remove; inspect for cracks, security, condition, and wash.		
ALL	22	Propeller Spinner Bulkhead: Inspect for cracks, security, and condition.		
ALL	23	Propeller Hub: Inspect exposed area for wear, cracks, security, condition and loose/missing hardware.		
ALL	24	Propeller Mounting: Inspect for proper mounting and visually inspect for security of installation.		
ALL	25	Propeller: Inspect for grease and oil leaks. Perform a preload plate set screw inspection as instructed below.		

TITLE:	Preload Plate Set Screw Check	MECH	INSP
INSPECTION INSTRUCTIONS	1. Manually rotate the propeller and listen for possible noise caused by a broken set or jam nut that may be loose in the propeller hub.		
	2. With the propeller blades in the feathered position, make sure the feather (low) stop nuts are seated on the reverse adjustment sleeve. For more details, see Hartzell Owners Manual 149 Chapter 2, Figures 2-2 through 2-8 and Chapter 5, page 5-28.		
	3. If there is noise indicating a loose part or the propeller blades do not go completely to feather, remove the propeller. Send the propeller to a repair station for disassembly and inspection for a possible broken preload set screw.		
	NOTE: If a broken set screw is found, the propeller must be inspected for damage that may have been caused by the broken set screw, and the incident must be reported to the Hartzell Product Support Department.		

ACFT TYPE		100 HOUR INSPECTION REQUIREMENTS	MECH	INSP
ALL	26	Battery Cables: Inspect for security, condition, and routing. Inspect battery terminal boots for deterioration, overheating, or burning.		
ALL	27	Battery Boxes: Inspect for corrosion, security, and condition. Inspect battery hold-down mechanism for proper function.		
ALL	28	Sealed Lead Acid Batteries: Inspect batteries for general security and condition. Check battery terminals for evidence of overheating and burning.		
ALL	29	Firewall Mounted Fuel Filter: Inspect for leaks, corrosion, security of installation, and general condition. Inspect and clean filter.		
ALL	30	Brake System Reservoir: Check for security of installation, condition, and leaks. Check for proper fluid level and any contamination.		
ALL	31	Engine Mount - for cracks, looseness of mounting, and looseness of engine to mount.		
ALL	32	Engine Mount Elastomers - for poor condition and deterioration.		
ALL	33	Engine External Tubing, Wiring, Control Linkages, and Hose Assemblies: All accessible connections, clamps and brackets for attachment. **NOTE:** Inspect accessible lockwire and safety cable for security and installation. Check for wear, chafing, cracks and corrosion. **NOTE:** Visually inspect insulated air tubes for sign of swelling, cracking, bulging of rubber sheath material. Replace as necessary. Check fuel and oil lines for leaks.		
ALL	34	Pay particular attention to rear linkage cam box, fuel control unit arm, telescopic rod and rod end fittings. Disconnect rod ends and clean using solvent (PWC11-027) or (PWC11-031). Lubricate with light grease (PWC04-001) after engine external wash. Examine rod end for corrosion, roughness in rotation, side play and radial play. After lubrication reinstall rod ends and torque to specified value. Check free movement of linkage.		

	MECH	INSP
(1) Visually inspect the actuating levers, control cam, and control lever mounting bracket for cracks. Cracks are not permitted.		
(2) Visually inspect the reversing lever guide pin bracket assembly on both faces of the fillet weld area around the guide pin for cracks. If cracks are found and/or fillet weld is on one face only, replace the bracket assembly (Ref. SB1416).		
(3) Examine the parts for minor surface damage such as scores, nicks, scratches, and gouges. Minor surface defects may be cleaned up by local blending with a fine stone or crocus cloth (PWC05-061) making sure that all sharp edges and high spots are removed.		
(4) Inspect the pin and bolt holes in each part and the slot in the control cam, for burrs and/or chipped edges. Clean up minor damage with a suitable Swiss file or fine stone.		
(5) Examine the grooved pin for burrs, nicks, scores and similar defects on serrations which might interfere with the fit between mating parts. Clean up minor defects with a fine stone and check the fit of mating parts.		
(6) Inspect the flexible shaft (wire rope) casing for cuts, dents, cracks, kinks, and similar defects which might prevent free movement of the internal wire rope. Minor damage is acceptable, providing the wire rope will operate freely without binding.		
(7) Check the wire rope for breaks in the wires, twisting, kinking, and for separation of the reverse wound coils. Reject the wire rope if damaged. Repair is not permitted.		

ACFT TYPE		100 HOUR INSPECTION REQUIREMENTS	MECH	INSP
ALL	35	Air Inlet Screen: Check for cleanliness.		
		(1) Inspect the air inlet screen wire mesh for cleanliness and/or damage. Screens with broken wire mesh must be replaced. Clean undamaged screens.		
		(2) On early PT6A-34 engines Post-SB1191: Check the spacer (5, Fig. 201) for security; rebond as necessary.		
		(3) For PT6A-34AG engines with the bleed air case; inspect the case for general condition and surface damage. Check for security of the packing material.		

ACFT TYPE		100 HOUR INSPECTION REQUIREMENTS	MECH	INSP
ALL	36	Gas Generator Case: Inspect external surfaces, and fireseal mount ring brackets for cracks, distortion, and corrosion.		
		(a) Examine for general condition, including cracks, distortion, corrosion and evidence of overheating.		
		(b) Minor corrosion on exposed surface of gas generator case may be removed. **NOTE:** If condition of gas generator case indicates further inspection is required, remove fuel manifold adapters and spark igniters		
		1) Machined surfaces (bosses and pads) with corrosion pitting less than 0.010 inch deep and less than 75 percent of the surface is acceptable without repair.		
		(c) On engines INSTALLED in the airframe, examine the engine mounts for attachment and condition.		
		(d) On engines NOT INSTALLED in the airframe, examine the condition of the mounting pads and threaded holes. Damage to the threaded holes may be repaired .		

ACFT TYPE		100 HOUR INSPECTION REQUIREMENTS	MECH	INSP
ALL	37	Fireseal Mount Rings: Check for cracks and attachment of brackets and seals.		
		(1) Examine the mount ring halves (Pre-SB1445 or Post-SB1445) for attachment, damage and condition. **NOTE:** For the external tubes/lines passing through the mount rings, refer to relevant chapters in this manual.		
		(2) Examine the circumferential packing material for security (Pre-SB1445 or Post-SB1445). A loose strip may be rebonded.		
		(3) Examine the rear fireseal mount ring halves for attachment, damage and condition. **NOTE:** For the external tubes/lines passing through the mount rings, refer to the relevant chapters in this manual.		
		(4) Examine the circumferential insulating strips for attachment. Loosened strips may be rebonded.		
		(5) Inspect mount ring spacers (Post-SB1441) for damage and condition. Replace as necessary.		

ACFT TYPE		100 HOUR INSPECTION REQUIREMENTS	MECH	INSP
ALL	38	Exhaust Duct: Check for cracks and distortion.		

DOI - KODIAK 100 SERIES - 100 HOUR INSPECTION

	MECH	INSP
(1) For periodic, hot section, or unscheduled inspections such as engine sudden-stoppage or suspected aircraft heavy landing, examine the exhaust duct critically for evidence of the following:		
(a) Examine the outer surface condition for buckling, ripples or similar distortion.		
(b) Inspect exhaust port flanges for cracking. Cracks not exceeding 0.500 inch in length and do not progress into the stitch weld or cracks in a tangential direction not exceeding 1.000 inch long are acceptable provided they are stop drilled with a 1/16 (0.0625) inch drill.		
(c) Examine the outer surface, particularly in the vicinity of Flanges A and C and the exhaust ports, for cracking in the metal skin, welds or flange bolt holes. Check the T5 system exit tube for security. The presence of cracks requires the removal of the exhaust duct for overhaul.		
(d) Check for the integrity of internal structure through the exhaust ports. **NOTE:** Refer to the Aircraft Maintenance Manual for removal/installation of the exhaust stubs.		
(e) Using suitable lighting or a borescope, examine the internal structure as far as possible for cracks, looseness and distortion.		
(2) For engines that have incorporated SB1610 since the last overhaul and that exhibit inferior welds.		
(a) Inspect for cracks at each minor inspection and repeat the inspection at intervals not to exceed 150 hours of flight time.		
(b) If cracks are found, repeat the inspection at intervals not to exceed 25 hours flight time. All cracks will be marked with a suitable metal marking pencil (PWC05-018), and the length, location, duct hours and Time Since Overhaul recorded.		
(c) Using 5x magnification, visually inspect the forward area of the exhaust duct for cracks, from the propeller reduction gearbox mounting flange to 2 inches aft around the entire circumference of the duct.		
1) Exhaust ducts are considered serviceable provided; a) There are no more than 3 cracks. b) The total length of all cracks does not exceed 2 inches. c) No one crack exceeds 1 inch. d) When there are 2 or 3 cracks they must be separated by a minimum of 6x the length of the longest crack or 3 inches, whichever is greater. e) The growth rate of any crack does not exceed 0.015 inch/hour of operation.		
(3) With the power turbine vane ring and stator housing removed (Ref. Fig. 201):		
(a) Inspect the exhaust duct (1) for cracks at Flange D in the location shown in detail A. Close visual and dye penetrant inspection should be carried out. When cracks are indicated, remove the exhaust duct for overhaul.		

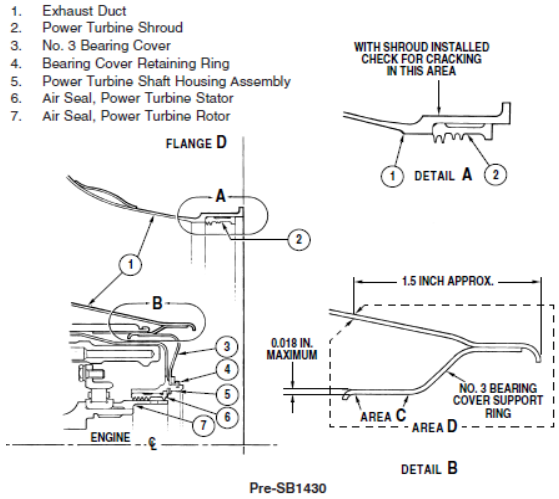

Removal/Installation of Exhaust Duct
Figure 201

			MECH	INSP
		(4) With the power turbine disk removed:		
		(a) Inspect the installed No. 3 bearing cover (3) Pre-SB1430. If evidence of looseness or rotation is present, Refer to applicable manual.		
		(b) Inspect the exhaust duct (1) area C where the bearing cover (3) Pre-SB1430 outside diameter mates with the exhaust duct. Light fretting may be polished out to the minimum material thickness of 0.018 inch. Evidence of the bearing cover rotation requires close visual and fluorescent dye penetrant inspection. The presence of cracks requires the removal of the exhaust duct for overhaul.		
		(c) Inspect the end of the ski jump Pre-SB1430 area D, Detail B, for cracks using fluorescent dye penetrant inspection. No cracks allowed.		

ACFT TYPE		100 HOUR INSPECTION REQUIREMENTS	MECH	INSP
ALL	39	Propeller Shaft Seal: Check for oil leaks.		
		A. Inspection of Oil Seal Retaining Ring or Ring Halves		
		(1) Examine oil seal retaining ring or ring halves for nicks, burrs and surface damage. Light stoning of damaged surfaces is acceptable.		
		(2) Check integrity of Post-SB1381/Post-SB1652 felt strip inserts in oil seal retaining ring halves . If worn or damaged, retaining ring halves must be shipped to an approved overhaul facility for felt strip insert replacement.		
		B. Inspection of Oil Seal Runner		
		(1) Examine visible area of seal runner for nicks, burrs and other surface damage caused by tools during removal of seal. No repair is acceptable. Ship power output section of engine to an approved overhaul facility for replacement of defective seal runner.		
		NOTE: If applicable, check the integrity of the sealant (PWC09-001) between the forward lip of the oil seal runner and propeller shaft. Replace if necessary.		
		(2) Examine the propeller shaft oil seal contact area on seal runner for wear (grooving). If concentrated wear is present, installation of an alternate offset propeller shaft oil seal should be considered. This offset seal will contact the runner at a different location (Ref. IPC).		

ACFT TYPE		100 HOUR INSPECTION REQUIREMENTS	MECH	INSP
ALL	40	Accessories: Inspect attachment and linkages, air, oil and fuel lines. **NOTE:** Visually inspect insulated air tubes for sign of swelling, cracking, bulging of rubber sheath material. Replace as necessary. Inspect for oil and fuel leaks as applicable. Check starter-generator gearshaft splines for wear (At starter-generator removal/replacement only)		
		(1) Insulated Tube Assemblies		
		(a) Examine flanged end fitting for elongated holes.		
		(b) Examine tube assemblies IAW applicable engine maintenance manual.		
		(c) Blend out damage that does not exceed specified limits. Replace tube assemblies damaged beyond limits.		
		(d) Examine the insulation on the pneumatic tube assemblies for cuts in the outer rubber sheath. Surface cuts up to three inches long may be repaired.		
		(e) If surface damage exceeds specified limits above, but depth is superficial, sheathing may be repaired by replacement of damaged portion.		
		(f) Examine the metal braid and electrical lead on heated tubes for cuts. Up to three broken wires per plait, or six broken wires per linear foot, are acceptable. Replace the tube assemblies where metal braid is chafed or worn through to the lead conductors.		
		(2) For Post-SB1495 Engines Air Filter Housing Drain Valve Assembly.		

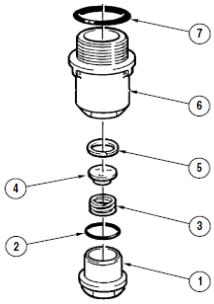

1. Drain Valve Adapter
2. Preformed Packing
3. Spring
4. Drain Valve
5. Retaining Ring
6. Filter Cover
7. Preformed Packing

Post-SB1495 Engines

Removal/Installation of Air Filter Housing Drain Valve
Figure 205

	MECH	INSP
(a) Filter Cover (6):		
1) Check lockwire holes for damage (tearing, cracks).		
2) Check threads for damage.		
3) Check that contact area is free of nicks and/or scratches.		
(b) Retaining Ring (5):		
1) Check for distortion. Replace if distorted.		
(c) Drain Valve (4):		
1) Check that contact area is free of nicks and/or scratches.		
2) Make sure drain holes are clear and unobstructed.		
(d) Valve Spring (3):		
1) Check for corrosion and/or damage. Reject if unsatisfactory.		
(e) Drain Valve Adapter (1):		
1) Check threads for damage.		
2) Check that contact area is free of nicks and/or scratches.		
3) Check flats and lockwire holes are free of damage.		
4) Check retaining ring groove. Reject if damaged or worn.		
A. Accessory Gearshaft Spline Wear Check.		

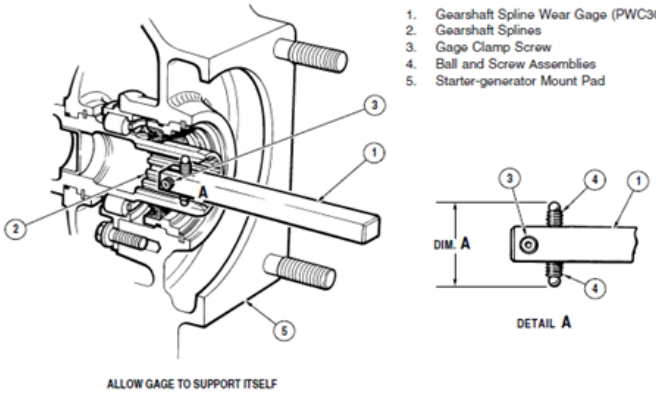

1. Gearshaft Spline Wear Gage (PWC30499-50)
2. Gearshaft Splines
3. Gage Clamp Screw
4. Ball and Screw Assemblies
5. Starter-generator Mount Pad

Accessory Gearshaft Spline Check
Figure 204

	MECH	INSP
NOTE: The accessory gearshaft must be checked for spline wear at related component removal/installation (Ref. Aircraft Maintenance Manual).		
(1) Release the clamp screw (3) and adjust the screw assemblies (4) to obtain the dimension of 0.660 inch over the ball ends. Tighten the clamp screws and recheck the dimension.		
(2) Tilt the gage (1), outer end uppermost, and insert the gage (PWC30499-50) into the shaft centerbore until the ball ends are approximately midway along vertically opposite splines.		
(3) Gradually release the gage, allowing it to support itself in the shaft. If the gage is self-supporting, the gearshaft is considered serviceable. If the gage extension falls below the horizontal, the gearshaft must be replaced.		
B. Oil Filler Cap, Dipstick/Gage Assembly and Oil Filler Tube.		

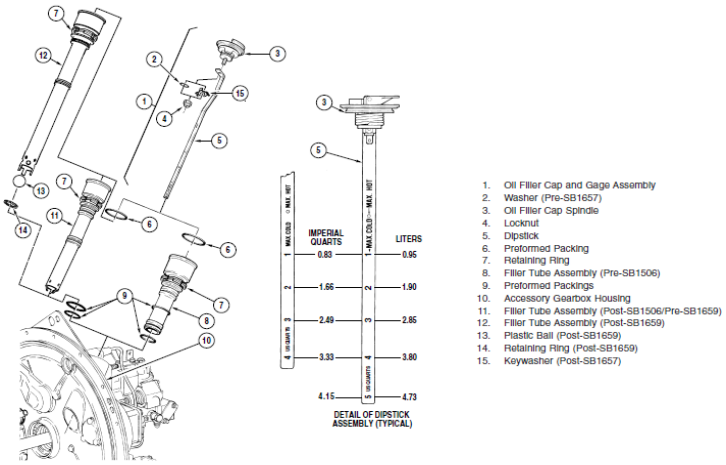

Removal/Installation of Oil Filler Cap, Dipstick/Gage Assembly and Oil Filler Tube
Figure 203

	MECH	INSP
(1) Examine the filler cap and level indicator assembly, and the oil filler tube for corrosion and signs of damage.		
(2) For Post-SB1506 Engines: Make sure the ball moves freely in the check valve of the filler tube.		
(3) Check the spring-loaded locking feature of the cap for serviceability. If the force required to depress/lift the handle is outside the limit (8 to 11 lbs.), remove the cap and tighten/loosen the self-locking nut to meet the required limit.		
NOTE: Ensure the self-locking nut is securely fastened (refer to SB1637 - Inspection of Oil Tank Filler Cap).		
(4) Check the gage blade for security and visible damage.		
(5) When the cap is locked, there should be no movement. If movement is found, replace the cap.		
C. Inspection of Scavenge Pump Inlet Screen		

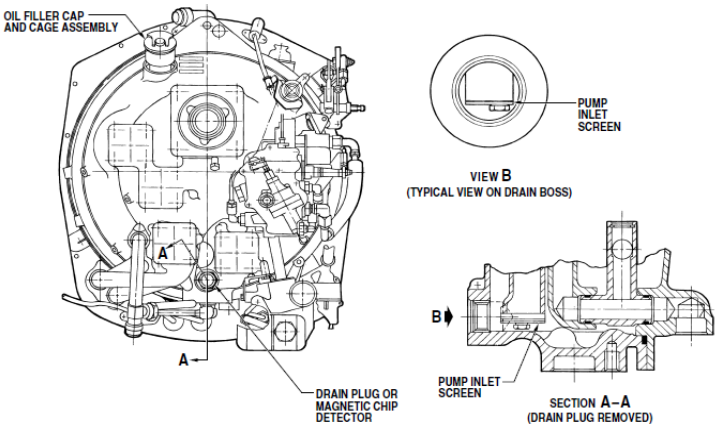

Scavenge Pump Inlet Screen Inspection
Figure 205

DOI - KODIAK 100 SERIES - 100 HOUR INSPECTION

	MECH	INSP
(1) Remove oil drain plug located on the AGB housing (Ref. Fig. 205).		
NOTE: For engine equipped with an AGB chip detector, remove the chip detector.		
(2) Collect drained oil in a clean container and check for any debris IAW maintenance manual.		
(3) Use a mirror and suitable light source (or borescope) and inspect the scavenge oil pump inlet screen for carbon or debris IAW appropriate maintenance manual.		
NOTE: Any foreign material found blocking the screen or contained in the oil should be identified. Look especially for paint flakes approximately 1/8 inch to 1/2 inch in diameter IAW appropriate manintenance manual.		
(4) If carbon or debris is present, clean the inlet screen (Ref. Cleaning/Painting, Fig. 205).		
(5) Install the drain plug on the AGB housing IAW appropriate maintenance manual.		
NOTE: For engine equipped with an AGB chip detector, install the chip detector.		
(6) Replenish the drained oil (if not contaminated by foreign material) in oil tank		

ACFT TYPE		**100 HOUR INSPECTION REQUIREMENTS**	MECH	INSP
ALL	41	First-stage Compressor Rotor: Do a visual inspection with a mirror or a borescope. **NOTE:** If any FOD has caused the engine to become prone to engine surges or causes unusual compressor whining, the large bent airfoil will make the whining sound. Remove the engine immediately.		
ALL	42	Hot Section: Examine with borescope. In conjunction with periodic fuel nozzle leak and function tests. For Post-SB1590 engines NOT incorporating SB1627 or SB1628: (1) Analyse engine condition trend monitoring system data on a weekly basis. No baseline HSI is required. (2) If the analysis indicates that the engine is deteriorating, then do a hot section inspection.		
		Hot Section Inspection (Ref. Fig. Appropriate HSI Sheets)		
		(1) For a normally scheduled HSI, do a ground performance run.		
		(2) Remove the RGB strainer, the main oil filter and the chip detector(s). Verify the debris.		
		(3) Verify Compressor for FOD.		
		(4) Remove power section/power section module.		
		(5) Measure the radial CT blade tip clearance and remove compressor turbine disk and blade assembly IAW appropriate manual.		
		(6) Remove combustion chamber liner IAW appropriate manual.		
		NOTE: Should it be necessary during HSI, to make a more detailed inspection of components which remain installed, those components should be removed IAW appropriate manual.		
		(7) Verify components as per Pratt and Whitney PT6 Maintinance Manual Table 603.		
		(8) If HSI is done due to over temperature, remove PT stator housing IAW appropriate manual.		
		(9) If necessary, calibrate and verify aircraft instrumentation after engine assembly.		
		(10) Do a ground performance run and inspect BOV closing point IAW appropriate manual.		
		(11) If a significant T5 increase is noted after ground performance run, borescope hot section for CT blade shroud rub.		

DOI - KODIAK 100 SERIES - 100 HOUR INSPECTION

ACFT TYPE		100 HOUR INSPECTION REQUIREMENTS	MECH	INSP
ALL	43	Oil System: Check oil level. **NOTE:** For oil change recommendations, refer to SB1001. Check condition and locking of oil filler cap. Oil filter elements and secondary screen (coarse hat-type screen attached to the inner end of the filter). Elements must be inspected and cleaned. Light traces of sediment only may be removed from the main filter screen. All other contamination requires replacement of filter element. Any foreign material found in main oil filter or on chip detector, should be identified before further inspection/operation. **NOTE:** Inspect initially at 100 hours with extension to relevant airframe zone inspection based on inspection results but not to exceed 200 hours. **NOTE:** If the engine has a recent history (within 200 flight hours) of generating carbon debris; do the inspection at 100 hours interval and replace the filter element at 300 hours interval. Refer to the appropriate manual for the instructions to start oil filter inspection again and for the oil filter replacement intervals. **NOTE:** If carbon like deposits are found, drain accessory gearbox oil into a clean container and examine debris. Varnish flakes are non metallic and are usually dark on one side and shiny, similar to bronze, on the other side. They are hard and will not form into paste when rubbed between fingers.		
ALL	44	Check magnetic chip detector(s) for continuity, open circuit must exist indicating no contamination at pole tips. If continuity is there, remove and examine for contamination. Any foreign material found on the chip detector or in the main oil filter must be identified before further inspection/operation. Refer to applicable manual. (See NOTE 3). **NOTE 1:** FOR SINGLE ENGINE AIRCRAFT, If the chip detector is connected to a cockpit indicating system, examine the chip detector initially at 100 hours with extension to relevant airframe zone inspection based on the inspection results, but not more then 200 hours. **NOTE 2:** FOR TWIN ENGINE AIRCRAFT, If the chip detector is connected to a cockpit indicating system, examine the chip detector initially at 100 hours with extension to relevant airframe zone inspection based on the inspection results, but not more than 400 hours. **NOTE 3:** While the chip detector is removed, examine with both poles bridged. With poles unbridged, inspect if continuity exists, and if no continuity exists, replace the chip detector.		
ALL	45	Bridge chip detector(s) magnetic pins with suitable jumper, and using a suitable ohmmeter, check continuity between connector pins. If continuity does not exist, replace chip detector. Any foreign material found on chip detector or in main oil filter should be identified before further inspection/operation. Refer to appropriate maintenance manual. **NOTE:** For aircraft equipped with an airframe supplied indicating device, the integrity of the complete indicating system can be checked by re-attaching the electrical connector to the removed chip detector and check for chip indication when magnetic poles are bridged. Closed circuit condition must exist.		
ALL	46	Check scavenge oil pump housing for leaks.		
ALL	47	Check the AGB internal scavenge oil pump inlet screen IAW appropriate maintenance manual. Collect drained oil. Using a mirror and a flashlight inspect the scavenge oil pump inlet screen. Any foreign material found blocking the screen or contained in the oil should be identified before further operation.		
		A. Cleaning of Scavenge Oil Pump Inlet Screen (Ref. Fig. 205)		

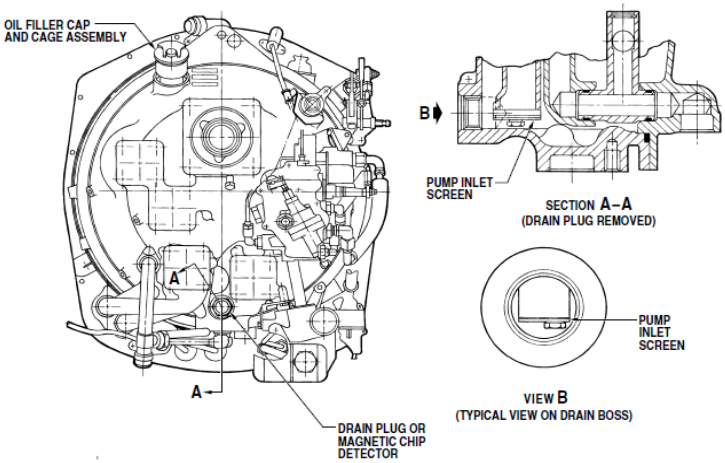

Scavenge Pump Inlet Screen Inspection
Figure 205

	MECH	INSP
(1) If carbon is present on the screen mesh, loosen with a suitable small plastic scraper or similar nonmetallic scraper. Do not deform the screen mesh.		
(2) Flush any carbon residue from the AGB as follows:		
(a) Remove the oil filler cap (Ref. Removal/Installation).		
(b) Remove the retaining ring and the oil filler tube (Ref. Removal/Installation)		
(c) Place a suitable container under the AGB drain, and pour approximately 34 fluid ounces (one liter) of new engine oil (PWC03-001) heated to 122°F (50°C), into the AGB filler tube opening. Make sure oil does not enter oil tank.		
(d) Let oil drain. Examine inlet screen and surrounding area to make sure carbon residue is removed. If not, repeat flushing procedure above.		
(3) Install oil filler tube (Ref. Removal/Installation).		
(4) Refill oil tank IAW appropriate maintenance manual.		

ACFT TYPE		100 HOUR INSPECTION REQUIREMENTS	MECH	INSP
ALL	48	Fuel System: Check fuel for water contamination. Check fuel pump for installation and leaks IAW appropriate manual. **NOTE:** If airframe fuel boost pump fails or is inadvertently left off for an accumulative time in excess of 10 hours, the engine driven fuel pump must be removed and replaced. The removed pump should be sent to an approved overhaul facility. **CAUTION:** ON NEW AIRCRAFT, CHECK FILTER AFTER EACH FLIGHT UNTIL NO CONTAMINATION IS EVIDENT. CHECK AFTER FIRST FLIGHT OR GROUND RUN WHENEVER ANY COMPONENT UPSTREAM OF FILTER IS REPLACED.		
ALL	49	Check outlet filter for foreign matter or distortion IAW appropriate manual. Install new filter as service conditions dictate, not to exceed 600 hours and when fuel system contamination is suspected.		
ALL	50	Check drain valve for installation and leaks IAW appropriate manual.		
ALL	51	Check FCU for installation, linkages and pneumatic tubes IAW appropriate manual.		
ALL	52	For Post-SB1568: Do a deceleration check IAW appropriate manual. **NOTE:** Not required for FCU identified with ‘‘RE52’’, ‘‘SB 73-3’’ or with a serial number that contains the letter F as prefix.		
ALL	53	For engines fitted with a manual override on the fuel control, check FCU Manual Override System for static operation.		
ALL	54	Check FCU for bearing wash-out, indicated by blue dye (grease and fuel mixed) at FCU vent .		
ALL	55	Check starting flow control/flow divider for installation and leaks IAW appropriate manual.		
ALL	56	Leak test and function test fuel manifold adapter and nozzle assemblies IAW appropriate manual. **NOTE 1:** Do the periodic borescope inspection of the hot section components in conjunction with the following tests (Ref. 2.B.). **NOTE 2:** Regular fuel nozzle maintenance is important for hot section durability. Inspection recommended at routine intervals according to: Engines ON fuel nozzle in-situ cleaning program, test fuel nozzles and repair as necessary. Where fuel quality is not sure, and for operators new to PT6A operation, inspection is recommended at 400 hours initially, with extension based on the operators experience and rejection rate, not more than 200 hours. For other operators, inspection is recommended at 600 hours initially, with extension based on the operators experience and rejection rate, not more than 200 hours. Engine NOT ON fuel nozzle in-situ cleaning program, test fuel manifold adapter. Where fuel quality is not sure, and for operators new to PT6A operation, cleaning/inspection is recommended at 200 hours initially, with extension, based on the operators experience and rejection rate, not more than 200 hours. For other operators, inspection is recommended at 400 hours initially, with extension based on the operators experience and rejection rate, not more than 200 hours.		
ALL	57	Check oil-to-fuel heater installation IAW appropriate manual.		
ALL	58	Ignition System: Check ignition exciter/current regulator for installation and condition IAW appropriate manual.		

DOI - KODIAK 100 SERIES - 100 HOUR INSPECTION

ACFT TYPE		100 HOUR INSPECTION REQUIREMENTS	MECH	INSP
ALL	59	Check ignition cables for chafing, wear and installation IAW appropriate manual.		
ALL	60	Check spark igniter/glow plugs for cleanliness and erosion. Check function IAW appropriate manual. **NOTE:** Inspect initially at 100 hours with extension to relevant airframe zone inspection based on inspection results but not to exceed 200 hours.		
ALL	61	Pneumatic System: Check P3 filter for installation IAW appropriate manual.		
ALL	62	Inspect pneumatic tubes and lines for cracks and damages especially at the end fittings and joints.		
ALL	63	Clean or replace filter, dependent on condition, service experience or environment IAW appropriate manual. **NOTE:** Visually inspect the P3 filter for corrosion. If the filter shows presence of corrosion, discard the filter and replace with a new filter.		
ALL	64	Clean and inspect Post-SB1495 P3 filter drain valve housing assembly IAW appropriate manual. **NOTE:** Filter contamination is greatly influenced by particular operating conditions and environment, inspection intervals may be modified accordingly.		
ALL	65	Propeller Governor and Overspeed Governor: Inspect for leaks, security, and condition. Inspect security of installation on electrical connections.		
ALL	66	Inspect fuel nozzles as instructed below. **Operation number and inspection interval may be determined based on the P&WC PT6A-34 MM, which allows extension of inspection interval based on operator qualifications.		
		CAUTION: USE EXTREME CARE WHEN HANDLING FUEL NOZZLE ASSEMBLIES SINCE EVEN FINGERPRINTS ON THE ORIFICE MAY PRODUCE POOR SPRAY PATTERN. CLEAN, LINT FREE GLOVES SHOULD BE WORN AT ALL TIMES WHEN HANDLING PARTS.		
		A. Fuel Nozzle Assembly		
		(1) Check the nozzle assembly for burrs and similar defects. Threads and hexagon may be lightly stoned to remove nicks and burrs.		
		B. Nozzle Sheath (Ref. Fig. 206)		
		(1) Erosion, any loss of coating is acceptable provided any loose coating is removed by light buffing and 0.040 inch minimum dome thickness is retained .		
		(2) Fretting wear, maximum permissible depth is 0.010 inch; deburr raised material.		
		C. Manifold Adapter		
		(1) Check the locating pin for security in the adapter and for burrs and similar defects. Check threads for damage.		
		D. Transfer Tubes (Ref. Fig. 207)		
		(1) Examine for general condition and check preformed packing grooves and lands for damage. Minor surface damage in the form of burrs and scratches, may be removed by blending.		
		(2) Inspect for bent transfer tubes (1) as follows:		
		(a) Put the transfer tube on flat surface and roll the transfer tube. If an elliptical motion is produced at any point along the tube, reject the tube.		
		(3) Inspect condition of external anodic finish.		
		(4) Examine the bore of each tube is free from blockage. Install the cap on the transfer tube (1) after inspection.		

DOI - KODIAK 100 SERIES - 100 HOUR INSPECTION

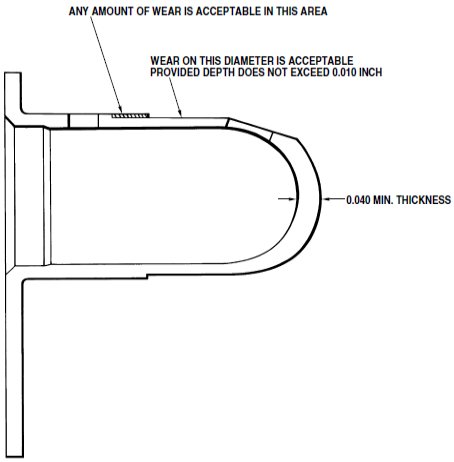

Nozzle Sheath Wear Limits
Figure 206

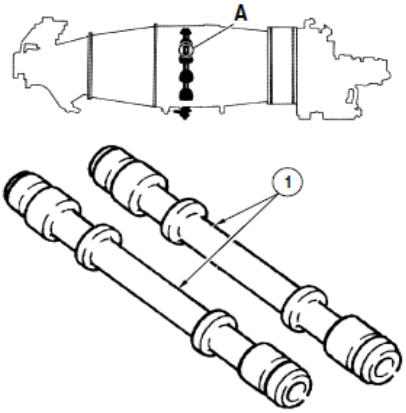

DETAIL A
(TYPICAL)

Fuel Manifold Transfer Tube
Figure 207

ACFT TYPE		100 HOUR INSPECTION REQUIREMENTS	MECH	INSP
ALL	67	EPA and Oil Drain Sump Cans: (If Equipped) Inspect can for leakage, condition, and security of installation. Completely drain can.		
ALL	68	EPA Can/Ejector Assembly: (If Equipped) Inspect assembly for leakage, condition, and security of installation. Completely drain can. Ensure that the alternate vent at the top of the ejector assembly is clean and free from debris.		
ALL	69	Engine System Drain Lines: Inspect the engine oil and fuel drain lines for proper routing of lines, deterioration of hoses, security of installation, and signs of leaks or damage.		
ALL	70	Drain Vents: Inspect vents on lower portion of cowlings for cleanliness and obstructions.		
ALL	71	Engine Fuel Lines: Inspect motive flow and fuel supply lines for chafing, deterioration, fuel leaks, and security of installation.		
ALL	72	Inspect engine fuel pump mounting lugs visually for cracks and other defects. Cracks are not permissible; minor surface damage may be repaired.		
ALL	73	Inspect engine fuel pump machined mounting faces for gouges, nicks, scores, scratches, and similar surface defects which can damage the gasket between the pump and accessory gearbox and/or prevent proper mating of the fuel control unit to the pump. Particular attention should be paid to the seal recess at the bypass port between the studs in mounting face for the fuel control unit.		
ALL	74	Inspect engine fuel pump bore of the inlet port for damage on the sealing surface.		
ALL	75	Check engine fuel pump studs for security and for damage to the threads.		
ALL	76	Inspect engine fuel pump seal seepage drain port and fuel outlet port adapter for damage to the threads.		
ALL	77	Check for leakage from engine fuel pump seal drain port:		
		(a) Coupling drive oil leaks from fuel pump drain should not exceed 3 cc per hour. If limits are exceeded, replace plain seal on accessory gearbox pad. If leaks are still present and exceed limits, ship unit for overhaul.		
		(b) Fuel leaks should not exceed 20 cc per hour. If leakage exceeds limit, ship fuel pump for overhaul. **NOTE:** If limit is exceeded, inspect FCU driveshaft bearing area for fuel contamination.		
		(1) Examine mounting flange, housing and components of lever mechanism for cracks and other surface defects. Cracks are not permissible; minor defects may be repaired.		
		(2) Examine ports for damage to internal threads and, if evident, send unit for rectification at an overhaul facility.		
		(3) Examine elbow fittings for damage to threads.		
		(4) Examine external surfaces for corrosion and for general condition of anodic treatment.		

	MECH	INSP
(5) Traces of blue grease on the driveshaft bearing face and retaining plate are acceptable. Presence of grease, with a hard or jelly-like consistency, indicates that the area has not been contaminated by excess fuel or oil and the driveshaft bearing stays lubricated.		
(6) Check that the drive shaft turns smoothly by spinning with light finger force. The driveshaft should stop turning when finger force is released.		
NOTE: A free spinning driveshaft indicates that the bearing has been subjected to lubricant wash-out and this is cause for rejection. Send the unit for rectification to an approved overhaul facility.		
(7) Check the drive couplings and FCU driveshaft for worn splines. Reject unit if any wear is found.		
(8) Brinelling of the driveshaft bearing is cause for rejection. Send the unit for rectification to an approved overhaul facility.		

ACFT TYPE		100 HOUR INSPECTION REQUIREMENTS	MECH	INSP
ALL	78	Inspect engine fuel pump splines on the drive coupling for nicks, gouges and chips.		
ALL	79	Examine engine fuel pump external surfaces of the pump for corrosion and for the general condition of the anodic treatment.		
ALL	80	Check for signs of leakage from the joint between the engine fuel pump cover and pump housing. If leakage is evident, return the pump for overhaul.		
ALL	81	Examine engine fuel pump inlet filter element for damage and/or breaks in the screen mesh.		
ALL	82	The engine fuel pump discharge filter is disposable and should be subjected only to visual examination for defects if the life of the part has not expired.		
ALL	83	Check that flexible hoses are fitted to avoid interference with the operation of the reversing linkage mechanism.		
ALL	84	Sundstrand Fuel Pump Coupling In-Situ Inspection - Remove the drain line and fitting from the fuel pump drain port (2, Fig. 202). **CAUTION:** IF A COTTON SWAB OR SIMILAR DEVICE IS USED FOR THIS INSPECTION, CARE MUST BE TAKEN TO MAKE SURE NO FOREIGN MATTER REMAINS IN THE DRAIN PORT OR ASSOCIATED FITTINGS AND LINES.		

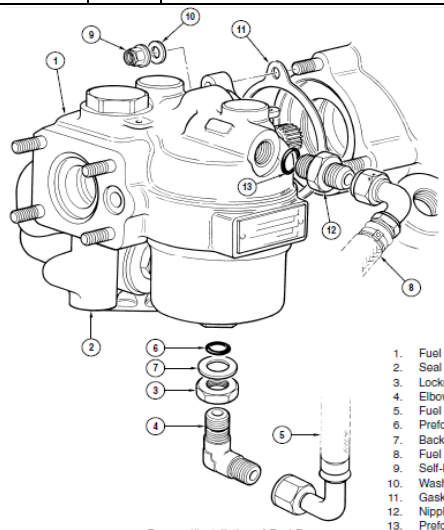

1. Fuel Pump
2. Seal Seepage Drain Port
3. Locknut
4. Elbow
5. Fuel Inlet Hose (from heater)
6. Preformed Packing
7. Back-up Ring
8. Fuel Outlet Hose (to FCU)
9. Self-locking Nut
10. Washer
11. Gasket
12. Nipple
13. Preformed Packing

Removal/Installation of Fuel Pump
Figure 202

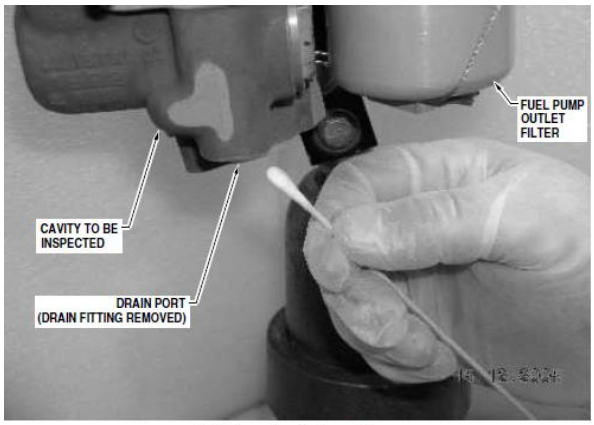

Fuel Pump In-situ Inspection
Figure 203

ACFT TYPE		100 HOUR INSPECTION REQUIREMENTS	MECH	INSP
ALL	85	Insert a cotton swab, or equivalent, 1.0 to 1.5 in. deep into the drain port of the fuel pump (Ref. Fig. 203).		
ALL	86	Angle the cotton swab (Ref. Fig. 203) and roll it inside the drain port to collect evidence of a possible reddish-brown deposit (iron oxide).		
ALL	87	If no reddish-brown (iron oxide) stain is evident, the fuel pump may remain in service. CAUTION: DO NOT REMOVE THE FUEL PUMP COUPLING. REMOVAL MAY CAUSE CHIPPING OF THE SPLINES AND/OR LOSS OF THE CIRCLIP RETENTION. THE CIRCLIP ALLOWS VERY LIMITED MOVEMENT OF THE PUMP COUPLING.		

ACFT TYPE		100 HOUR INSPECTION REQUIREMENTS	MECH	INSP
ALL	88	If a reddish-brown (iron oxide) stain is evident:		
		Remove fuel pump.		
		(b) Examine the input coupling shaft area of the pump face (Ref. Fig. 201) for residue from fretting corrosion (iron oxide deposit). If none is present, the pump may remain in service.		
		(c) Evidence of corrosion residue indicates possible spline wear. Return the fuel pump to an approved overhaul facility.		
		(d) Install a replacement fuel pump.		

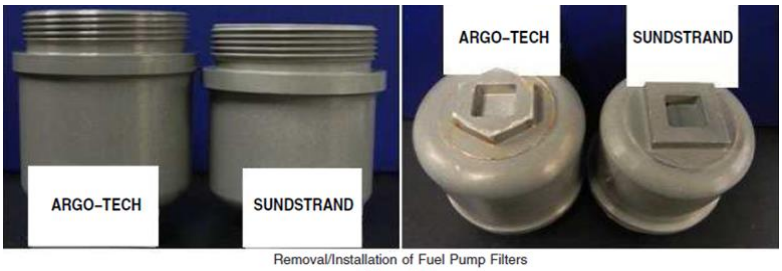

Removal/Installation of Fuel Pump Filters
Figure 201

ACFT TYPE		100 HOUR INSPECTION REQUIREMENTS	MECH	INSP
ALL	89	Fuel Manifold: Inspect for evidence of fuel leaks and security of installation.		
ALL	90	Flow Divider: Inspect for fuel leaks and security of installation.		
ALL	91	Firewall Fuel Shutoff Control: Perform an operational check as instructed below.		
TITLE:		Firewall Fuel Shutoff Control Operational Check Procedure		
			MECH	INSP
INSPECTION INSTRUCTIONS		1. Operate the control to check for freedom of movement and positive engagement of the shutoff valve at the firewall.		
		2. With the firewall shutoff valve closed, open the drain valve on the firewall mounted fuel filter. Verify proper operation of the shutoff valve by checking that only a small amount of fuel flows from the filter drain valve.		

ACFT TYPE		100 HOUR INSPECTION REQUIREMENTS	MECH	INSP
ALL	92	P3 Filter: Clean and inspect for general condition.		
ALL	93	Fuel Control Unit: Inspect for fuel leaks and security of installation.		
ALL	94	Fuel Control Unit: Inspect for bearing washout (indicated by leakage of a mixture of blue dyed grease and fuel) at the FCU vent.		
ALL	95	FCU Manual Override: Perform FCU Manual Override System static check.		
ALL	96	Fuel Flow Transducer: Inspect for fuel leaks, evidence of damage and security of installation.		
ALL	97	Inspect spark igniters as instructed below.		
		(1) Inspect the exterior cylindrical area of the firing end of the igniter shell for chafing wear. Wear is acceptable to a depth of 0.015 inch.		
		(2) Inspect the igniter shell and electrode for erosion (Ref. Fig. 204 and Table 202). If erosion equals or exceeds amounts shown, reject the spark igniter.		
		(3) Do a functional test on acceptable and replacement spark igniters.		

CAUTION:

SHOULD AN IGNITER PLUG BE DROPPED, INTERNAL DAMAGE, POSSIBLY NOT DETECTABLE BY TEST, CAN OCCUR. RECOMMENDATION IS TO REPLACE THE IGNITER PLUG.

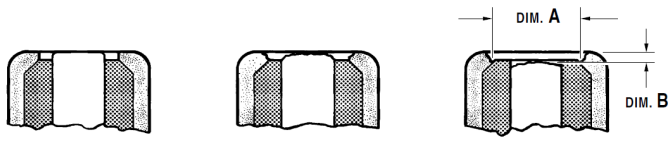

TABLE 202, Spark Igniter Erosion Limits

P&WC PART NO.	VENDOR NAME AND PART NO.	DIM. A (IN)	DIM. B (IN)
* 3014986	Champion: FHE-182	0.3437	0.0312
* 3024706	A.C.: 5611760	0.2750	0.1000
** 3027280	Champion: CH34055	0.3000	N/A
** 3031213	Bendix: 10-390667-1	0.3000	N/A

* Earlier parts supplied under ordering Part No. 3014981.

** Later parts supplied under ordering Part No. 3032096. Igniters eroded beyond limits should be replaced by latest part(s), if available.

ACFT TYPE		100 HOUR INSPECTION REQUIREMENTS	MECH	INSP
ALL	98	Engine Controls: Check for proper operation, freedom of movement and that full range of motion is attained. Check that component stops are reached prior to the cockpit control stops. Inspect for security of installation, corrosion, wear, evidence of damage, proper routing and any deterioration.		
ALL	99	Engine and Propeller Control Linkages and Attach Brackets: Inspect for wear, corrosion, freedom of movement, security of installation and general condition.		
ALL	100	Engine Control Rod Ends: Inspect for corrosion, freedom of movement, and radial play. Lubricate the rod ends with LPS-1. * Engine Control Rod Ends must also be lubricated following each external engine wash.		
ALL	101	Engine Exhaust: Inspect ducts for cracks, distortion, evidence of damage, and security of installation.		
ALL	102	Oil Filter Element: Remove filter element and inspect for damage and debris. Clean filter.		
ALL	103	Oil Filler Cap and Dipstick: Inspect for proper condition and security of installation.		
ALL	104	Chip Detector Annunciation: Perform annunciation test (If Equipped).		
ALL	105	Oil Pressure Sensors: Inspect plumbing for leakage, condition and security of installation. Inspect the electrical connections for evidence of damage, condition and security of installation.		
ALL	106	Autopilot Cutoff Relay (If Equipped): Inspect relay for security of installation, signs of electrical damage or other damage, and proper operation.		
ALL	107	Pilot, Copilot, and Passenger Restraints: Inspect pilot and copilot inertia reels for proper operation. Inspect pilot, copilot and passenger seat belts and shoulder harnesses for condition, frayed edges, signs of damage, and proper operation.		
ALL	108	Pilot, Copilot, and Passenger Seats: Inspect seat brackets, guides, and stops for security and condition. Inspect controls for security, condition and proper operation. Inspect the seat structure and seat cushions for proper condition and security. Service the seat position adjusting screws, bearings and locking mechanisms.		
ALL	109	Pilot and Copilot Seat Back Stop Mechanism: Inspect for loose or missing hardware and proper condition.		
ALL	110	Seat Rails: Inspect seat rails and stops for proper condition and security of installation. Inspect seat rail stops for proper location, security and installation. Clean and lubricate the crew seat rails with LPS 1.		
ALL	111	Portable Fire Extinguishers: Inspect for proper pressure, condition, and security of installation. Check required service date.		
ALL	112	Stall Warning Horn and Stall Warning Horn Relay: Inspect the warning horn and relay for proper condition, security of installation, and signs of damage. Inspect horn grill cover for proper condition and security of installation. (Ground check only.)		
ALL	113	Squat Switch (If Equipped): Inspect squat switch for proper operation, condition, security, and signs of damage.		
ALL	114	Stall Warning Computer (If Equipped): Inspect for security of attachment, damage, and proper operation.		
ALL	115	Control Column: Inspect control column assembly forward and aft of the instrument panel for condition and security of installation. Operate the control wheel in all directions while inspecting all moving components to verify proper operation and freedom of movement. Inspect bearing and wear surfaces for proper condition. Replace as needed.		
ALL	116	Rudder Pedals and Rudder Pedal Linkage: Inspect for proper condition and security of installation. Operate rudder pedals to verify freedom of movement and full range of travel.		
ALL	117	Electric Rudder Trim and Indicator: Inspect the trim system for proper condition and security of installation. Operate the trim to verify proper operation, freedom of movement and full range of motion. Check that the trim system contacts the limit switches prior to hitting the hard stops on the bungee collar. Verify the indicator functions properly.		

DOI - KODIAK 100 SERIES - 100 HOUR INSPECTION

ACFT TYPE		100 HOUR INSPECTION REQUIREMENTS	MECH	INSP
ALL	118	Flap Control System: Inspect the flap control lever for proper condition, security of installation, travel, and signs of damage.		
ALL	119	Instrument Panel Mounted Avionics Units: Clean as outlined in Section 8 of the POH/AFM.		
ALL	120	Radio and electronic equipment - for improper installation and insecure mounting.		
ALL	121	Wiring and conduits - for improper routing, insecure mounting, and obvious defects.		
ALL	122	Bonding and shielding - for improper installation and pooor condition.		
ALL	123	Antenna including trailing antenna - for poor condition, insecure mounting, and improper operation.		
ALL	124	Pitot and Static Drain Valves: Inspect for proper operation, security and signs of damage. Visually inspect for leaks and presence of water in valve. Drain any accumulated water.		
ALL	125	Cargo Door Entrance Steps: Inspect for proper condition and security of installation. Lubricate the cargo door step hinge points with LPS 1.		
ALL	126	Windshield and Windows: Inspect for proper condition, security of installation and debond areas. Inspect pilot's storm window for proper operation and sealing.		
ALL	127	ELT: Inspect for security of installation, condition of electrical components and position of the function switch. Inspect the ELT structure for corrosion. Check cumulative time and useful life of battery IAW 14 CFR Part 91.207.		
ALL	128	Rudder: Inspect the rudder hinges for cracks, proper condition, and security of installation. Inspect the hinge bolts, hinge bearings, hinge attach fittings, and bonding jumpers for evidence of damage or unusual wear. Inspect for failed fasteners and proper safetying of nuts with cotter pins. Inspect the rudder skins for cracks and loose rivets. Inspect balance weight for security and condition.		
ALL	129	Elevator: Inspect elevator skins for cracks, condition, and loose rivets; elevator hinges for condition, security, and cracks; and hinge bolts, hinge bearings, torque tube horn, attach fittings, and bonding jumpers for evidence of damage or unusual wear, failed fasteners, and security of installation. Inspect elevator hinge bolts for proper safetying of nut with cotter pins. Inspect supporting structure for signs of damage. Inspect balance weights for security and condition.		
ALL	130	Elevator Trim Tabs: Inspect the trim tab skins for cracks, loose rivets, and security of installation. Inspect the trim tab hinge for security, cracks, and corrosion. Inspect the hinge pin for properly centered installation. Inspect the pushrods for security and any signs of damage. Inspect the pushrod bolts for proper condition and safetying of nuts with cotter pins. Lubricate the trim tab piano hinges with LPS 1.		
ALL	131	Vertical and Horizontal Stabilizers: Inspect the structures and their attach points for security and condition. Inspect vortex generators for condition and security.		
ALL	132	Flight Control Systems Rod End Connections: Check for proper condition and freedom of movement. Lubricate with LPS 1.		
ALL	133	Ailerons: Inspect aileron hinges for proper condition, cracks, and security of installation. Inspect the hinge bolts, hinge bearings, hinge attach fittings, and bonding jumpers for evidence of damage, unusual wear, failed fasteners, and security of installation. Inspect the aileron skins for cracks and loose rivets. Inspect balance weights for security and condition.		
ALL	134	Aileron Trim Tab: Inspect the trim tab skin for cracks, loose rivets, and security of installation; trim tab hinges for security of installation and signs of damage; hinge pin for proper installation in hinge pin retainer; horn and pushrod for signs of damage and security of installation; pushrod bolts for proper condition and proper safetying of nuts with cotter pins.		
ALL	135	Flap Actuator Assemblies and Flap Gap Seals (Wing): Inspect for proper condition and security of installation of the wing flexible shafts. Inspect the flap actuator support structures for proper condition and security of installation. Inspect the fuselage gap seal assemblies for security and condition.		
ALL	136	Wing Fuel Tanks: Inspect for fuel stains or any evidence of fuel leaks. Check drain/vent holes in the lower wing skins just outboard of the wing tanks for signs of leakage and for cleanliness.		
ALL	137	Fuel Tank Filler Caps and Flapper Valves: Inspect for broken components or other damage. Check filler cap locking position and security of installation.		
ALL	138	Fuel Drain Valves: Check for proper operation and inspect for corrosion, leakage and proper sealing action.		
ALL	139	Fuel Selector Valves and Linkages: In the wing root area, inspect shutoff valves, controls and linkages for security, condition and signs of damage.		
ALL	140	Fuel Vent Lines (Wings): Inspect for signs of damage, obstructions, and cleanliness.		

DOI - KODIAK 100 SERIES - 100 HOUR INSPECTION

ACFT TYPE		100 HOUR INSPECTION REQUIREMENTS	MECH	INSP
ALL	141	Pitot/Static Tubes: Visually inspect tubes and static ports for obstructions. Inspect pitot masts for damage, security, and general condition.		
ALL	142	Stall Warning Lift Sensor (Vane-type or Lift Transducer, as equipped): Inspect for proper condition and security of installation.		
ALL	143	Wing Access Panels: Inspect for signs of damage and security of installation.		
ALL	144	Main Landing Gear Fairings: Inspect for proper condition and security of installation. Check for interference between the brake lines and fairings.		
ALL	145	Main Landing Gear System: Inspect for general condition and security. Check that there is no freeplay between the landing gear legs and trunnion. Check for security of nuts and cotter pin placement on trunnion mounting studs. Check for proper condition and any signs of damage at trunnion and gear legs. Lubricate the trunnion assemblies with Aeroshell Grease 22. Complete as instructed below. ****Caution** DO NOT** pump more than three (3) pumps of grease in the end caps. Inserting excessive amounts of grease into the end caps will pressurize the end caps which can damage the surrounding structure.		
TITLE:		Main Landing Gear Free-Play Check		

		MECH	INSP
INSPECTION INSTRUCTIONS	**NOTE:** If any free play occurs between a landing gear leg and the main gear trunnion, the landing gear may need to be replaced. To confirm any movement between the gear leg and the trunnion accomplished the following inspection:		
	1. Jack the aircraft as instructed in the appropriate Kodiak Manual.		
	2. If any free-play is detected, the landing gear leg/trunnion assembly must be replaced.		

ACFT TYPE		100 HOUR INSPECTION REQUIREMENTS	MECH	INSP
ALL	146	Nose Gear Fork: Inspect for proper condition and security of installation.		
ALL	147	Nose Gear Shock Strut: Inspect for evidence of leakage and proper extension. Service as necessary. Inspect strut barrel for pitting and corrosion. Inspect for general condition and cleanliness. Wipe the nose strut chrome tube with a cloth lightly damp with MIL-H-5606 hydraulic fluid.		
ALL	148	Brake Lines and Plumbing: Inspect all lines for leaks. Inspect flexible hoses for bulges, deterioration, twists and kinks. Inspect rigid tubing for proper condition, security of installation and routing.		
ALL	149	Brake Assemblies: Check brake lining wear, check disk for proper condition and any warping. Inspect for signs of leakage as instructed below.		
TITLE:		Brake Inspection		

		MECH	INSP
INSPECTION INSTRUCTIONS	1. Disassemble the brake as instructed in applicable Kodiak Manual.		
	2. Inspect the brake linings for deterioration. Ensure the wear is within the limits.		
	3. Replace the brake linings if worn to 0.100 inch or less.		
	4. Inspect the brake cylinder bores for signs of scoring and deterioration. Replace the cylinder assembly if the cylinders are scored.		
	5. Replace all packings, back-up rings, and O-rings when reassembling the brakes.		
	6. Reassemble the brake as instructed in applicable Kodiak Manual.		

ACFT TYPE		100 HOUR INSPECTION REQUIREMENTS	MECH	INSP
ALL	150	Nose Landing Gear Tire and Wheel: Inspect for proper inflation pressure, wear and condition of tire. Inspect wheel for security of installation and condition.		
ALL	151	Main Landing Gear Tires and Wheels: Inspect for proper inflation pressure, wear, and condition of tire. Inspect wheel for security of installation and condition.		
ALL	152	Nose Gear Steering Bellcrank: Inspect for proper condition and security of installation.		
ALL	153	Nose Gear Steering Stop Mechanism: Inspect for cracks, proper installation, security, and condition. Verify steering limits have not been exceeded.		

DOI - KODIAK 100 SERIES - 100 HOUR INSPECTION

ACFT TYPE		100 HOUR INSPECTION REQUIREMENTS	MECH	INSP
ALL	154	Shimmy Damper: Inspect for proper condition, security, and signs of leakage (if applicable). Lubricate the shimmy damper pivot points with LPS 1.		
ALL	155	Steering Bungee: Check for the security of threaded rod end into the bungee housing. Check for the security of the band clamp securing the steering bungee and the bungee adjuster. Lubricate the rod end with LPS 1.		
ALL	156	Perform a transient voltage suppressor inspection (if GFC 700 equipped) as instructed below.		
TITLE:		Transient Voltage Suppressor Inspection		

		MECH	INSP
INSPECTION INSTRUCTIONS	**WARNING:** Damage can occur to the GRS or GMU if insulation resistance voltage is applied to the GRS or GMU.		
	A. Place the master switch in the OFF position.		
	B. Disconnect the following connectors from the associated equipment.		
	1. 1P771 from GRS77 #1		
	2. 2P771 from GRS77 #2		
	3. P501 from RH wing root		
	4. P601 from LH wing root		
	5. 1P441 from GMU44 #1		
	6. 2P441 from GMU44 #2		
	C. Conduct insulation resistance tests.		
	1. Configure the insulation tester for a 50 volt test and measure the insulation resistance between the following pins. Measured insulation resistance must be greater than 40 Meg Ohms.		
	a. GRS77 #1, connector 1P771 pins 9 and 40		
	b. GRS77 #2, connector 2P771 pins 9 and 40		
	c. GMU44 #1, connector 1P441 pins 9 and 6		
	d. GMU44 #2, connector 2P441 pins 9 and 6		
	2. Configure the insulation tester for a 100 volt test and measure the insulation resistance between the following pins. Measured insulation resistance must be less than 0.200 Meg Ohms.		
	a. GRS77 #1, connector 1P771 pins 9 and 40		
	b. GRS77 #2, connector 2P771 pins 9 and 40		
	c. GMU44 #1, connector 1P441 pins 9 and 6		
	d. GMU44 #2, connector 2P441 pins 9 and 6		
	D. Replace any TVS units that fail either resistance test. See appropriate Kodiak Manual.		
	E. After all TVS devices satisfy the inspection requirements, reconnect the following connectors to the associated equipment.		
	1. 1P771 to GRS77 #1		
	2. 2P771 to GRS77 #2		
	3. P501 to RH wing root		
	4. P601 to LH wing root		

	MECH	INSP
5. 1P441 to GMU44 #1		
6. 2P441 to GMU44 #2		

ACFT TYPE		100 HOUR INSPECTION REQUIREMENTS	MECH	INSP
ALL	157	Perform a lightening protection resistor inspection (if GFC 700 equipped) as instructed below.		
TITLE:		Lightning Protection Resistor Inspection		

		MECH	INSP
INSPECTION INSTRUCTIONS	A. Place the Master switch in the OFF position		
	B. Disconnect the following connectors from the associated equipment		
	1. 1P771 from GRS 77 #1		
	2. P601 from J601		
	3. 2P771 from GRS 77 #2		
	4. P501 from J501		
	5. 1P603 from GIA #1		
	6. 2P603 from GIA #2		
	7. 4P801 from Pitch Trim Servo		
	8. 2P801 from Roll Servo		
	9. 1P441 from GMU #1		
	10. 2P441 from GMU #2		
	C. Conduct resistance tests.		
	NOTE: Subtract out the resistance of the test leads.		
	1. Measure resistance between GRS #1 connector 1P771 pin 10 and connector P601 pin M. Resistance should be between 2.2 ohms and 3.4 ohms.		
	2. Measure resistance between GRS #2 connector 2P771 pin 10 and P501 pin D (SN 100-0120 and up) or pin 4 (SN 100-0001 - SN 100-0119). Resistance should be between 2.2 ohms and 3.4 ohms.		
	3. Measure resistance between connector 1P603 pin 4 and connector P601 pin U. Resistance should be between 3.2 ohms and 4.5 ohms.		
	4. Measure resistance between connector 1P603 pin 6 and connector P601 pin Y. Resistance should be between 3.2 ohms and 4.5 ohms.		
	5. Measure resistance between connector 2P603 pin 4 and connector P601 pin GG. Resistance should be between 3.2 ohms and 4.5 ohms.		
	6. Measure resistance between connector 2P603 pin 6 and connector P601 pin HH. Resistance should be between 3.2 ohms and 4.5 ohms.		
	7. Measure resistance between connector 4P801 pin J and connector P601 pin U. Resistance should be between 3.4 ohms and 4.7 ohms.		
	8. Measure resistance between connector 4P801 pin T and connector P601 pin Y. Resistance should be between 3.4 ohms and 4.7 ohms.		
	9. Measure resistance between connector 4P801 pin S and connector P601 pin GG. Resistance should be between 3.4 ohms and 4.7 ohms.		
	10. Measure resistance between connector 4P801 pin E and connector P601 pin HH. Resistance should be between 3.4 ohms and 4.7 ohms.		
	11. Measure resistance between connector 2P801 pin J and connector J601 pin U. Resistance should be between 3.1 ohms and 4.4 ohms.		
	12. Measure resistance between connector 2P801 pin T and connector J601 pin Y. Resistance should be between 3.1 ohms and 4.4 ohms.		

	MECH	INSP
13. Measure resistance between connector 2P801 pin S and connector J601 pin GG. Resistance should be between 3.1 ohms and 4.4 ohms.		
14. Measure resistance between connector 2P801 pin E and connector J601 pin HH. Resistance should be between 3.1 ohms and 4.4 ohms.		
15. Measure resistance between connector 1P441 pin 4 and connector J601 pin L. Resistance should be between 2.2 ohms and 3.4 ohms.		
16. Measure resistance between connector 1P441 pin 2 and connector J601 pin S. Resistance should be between 2.2 ohms and 3.4 ohms.		
17. Measure resistance between connector 1P441 pin 8 and connector J601 pin M. Resistance should be between 2.2 ohms and 3.4 ohms.		
18. Measure resistance between connector 2P441 pin 4 and connector J501 pin L. Resistance should be between 2.2 ohms and 3.4 ohms.		
19. Measure resistance between connector 2P441 pin 2 and connector J501 pin S. Resistance should be between 2.2 ohms and 3.4 ohms.		
20. Measure resistance between connector 2P441 pin 8 and connector J501 pin D (SN 100-0120 and up) or pin 4 (SN 100-0001 - SN 100-0119). Resistance should be between 2.2 ohms and 3.4 ohms.		

ACFT TYPE		100 HOUR INSPECTION REQUIREMENTS	MECH	INSP
ALL	158	Inspect each installed miscellaneous item that is not otherwise covered by this listing for improper installation and improper operation.		

ACFT TYPE		100 HOUR INSPECTION REQUIREMENTS TKS ICE PROTECTION SYSTEM INSPECTION	MECH	INSP
ALL	159	Porous Panels and Windshield Nozzles - Inspect for proper condition and security.		
ALL	160	Porous Panels and Windshield Nozzles - Operate system to check for even flow from all panels. Inspect for leaks from sealed areas.		
ALL	161	Propeller Slinger - Inspect for proper condition and security of installation. Check fluid lines for leaks with the system operating. Check for proper routing/aim of nozzles. Ensure the fluid is discharging into ring from nozzle fitted at front of engine.		
ALL	162	Propeller Nozzle (Aircraft to Propeller Slinger) - Inspect that nozzle is positioned to direct a stream of fluid into propeller slinger with system operating on HIGH.		
ALL	163	Ice Inspection Lights - Inspect lights and electrical connections for proper operation and security of installation. Ensure that the orientation of the ice lights provide adequate illumination of the wings' leading edge.		
ALL	164	Stall Warning Lift Transducer Heat Check - Perform inspection as instructed below.		
TITLE:		Lift Transducer Functional Heat Test		

		MECH	INSP
INSPECTION INSTRUCTIONS	**CAUTION:** On airplanes equipped with a heated lift transducer, the lift transducer and the area around the lift transducer may be hot enough to instantly burn skin, burn or melt clothing and or objects touching it. Do not touch the lift transducer or surrounding area until it has cooled.		
	CAUTION: The heaters will quickly overheat in "Air" mode. Only allow five seconds MAX to perform the test.		
	1. Ensure left pitot cover is removed.		
	2. Apply ground power to the airplane.		
	3. Move the MASTER switch to ON.		
	4. Move the left Pitot Heat switch to ON.		
	5. Allow 5 minutes for heating element to reach equilibrium.		
	6. Use an infrared thermometer to verify the lift transducer vane and mounting plate are hot and mounting plate measures > 100º.		
	7. Set the aircraft in "Air" mode.		
	NOTE: Set the aircraft in "Air" mode by removing the floorboards and depressing the Weight-On-Wheels plunger.		
	NOTE: Set the aircraft in "Air" mode by removing the floorboards and depressing the Weight-On-Wheels plunger.		

	MECH	INSP
8. Allow 5 seconds only for heating element to show temperature increase.		
CAUTION: The heaters will quickly overheat in “Air” mode. Only allow five seconds MAX to perform the test.		
9. Use an infrared thermometer to verify the lift transducer vane and mounting plate increase in temperature.		
10. Remove aircraft from “Air” mode.		
11. Move the left Pitot Heat switch to OFF.		
12. Move the MASTER switch to OFF.		
13. Remove ground power to the airplane.		
14. Replace left pitot cover.		

ACFT TYPE		SUPPLEMENTAL 100 HOUR INSPECTION REQUIREMENTS EXTERNAL CARGO COMPARTMENT INSPECTION	MECH	INSP
ALL	165	EPA and Oil Drain Sump Cans: (If Equipped) Inspect can for leakage, condition, and security of installation. Completely drain can.		
ALL	166	External Cargo Compartment Fuel Drain Lines - Check drain lines and valves for evidence of leakage and proper operation.		

ACFT TYPE		SUPPLEMENTAL 100 HOUR INSPECTION REQUIREMENTS GARMIN GWX 68 WEATHER RADAR 100 HOUR INSPECTION	MECH	INSP
ALL	167	Radome and Radome/Wing Attachment (If Equipped): Inspect for security of installation and proper condition. Ensure that there are no cracks in the dome, mount, or reinforcement.		
ALL	168	Wing Skin at attach Point (If Equipped): Inspect for security of installation and proper condition. Ensure that the UHMW tape is installed between the mount/wing skin and reinforcement/wing skin.		

ACFT TYPE		100 HOUR INSPECTION REQUIREMENTS	MECH	INSP
ALL	169	Conduct aircraft lubrication as specified in table below.		

Interval	Item	Location	Lubricant
100 hr	AFT Door Piano Hinges	AFT Door	LPS 1® Greaseless Lubricant
100 hr	Aileron Control Rod End Connections	Ailerons	LPS 1® Greaseless Lubricant
100 hr	Cargo Door Steps	AFT Door	LPS 1® Greaseless Lubricant
100 hr	External Cargo Compartment Door Hinges (If Equipped)	External Cargo Compartment Access Doors	LPS 1® Greaseless Lubricant
100 hr	Cowling Hinge Points	Engine Cowling	LPS 1® Greaseless Lubricant
100 hr	Cargo Door Hinge Points	Cargo Doors	LPS 1® Greaseless Lubricant
100 hr	Cargo Door Locking Mechanisms	Cargo Doors	LPS 1® Greaseless Lubricant
100 hr	Cargo Door Locking Pivots	Cargo Doors	LPS 1® Greaseless Lubricant
100 hr	Crew Door Hinge Points	Crew Doors	LPS 1® Greaseless Lubricant
100 hr	Crew Door Locking Mechanisms	Crew Doors	LPS 1® Greaseless Lubricant
100 hr	Crew Door Locking Pivots	Crew Doors	LPS 1® Greaseless Lubricant
100 hr	FCU/DIPS/SIPS Control Rod Ends	Engine Compartment	LPS 1® Greaseless Lubricant
100 hr	Flight Control Cable Rod End Connections	Nose wheel steering, pedal torque tube and flight control rod ends	LPS 1® Greaseless Lubricant
100 hr	Inertial Air Particle Separator Actuators	Engine Compartment	LPS 1® Greaseless Lubricant
100 hr	Main Landing Gear Trunnion	Main Landing Gear	Aeroshell 22 Grease
100 hr	Reverse Cam	Engine Compartment	Lubriplate Multi-Purpose Grease 630AA
100 hr	Shimmy Damper Pivot Points	Nose Gear	LPS 1® Greaseless Lubricant
100 hr	Steering Bungee	Nose Gear	LPS 1® Greaseless Lubricant
100 hr	Trim Tab Piano Hinges	Elevator	LPS 1® Greaseless Lubricant

DOI - KODIAK 100 SERIES - 100 HOUR INSPECTION

ACFT TYPE		100 HOUR INSPECTION REQUIREMENTS	MECH	INSP
ALL	170	Compressor Wash: Inspect wash ring for condition and security of installation. Perform a compressor wash.		
TITLE:		Turbine Blade Wash Procedures		

		MECH	INSP
INSPECTION INSTRUCTIONS	**NOTE:** Adhere to the following starter limitations for motoring the engine.		

Starter Options	Time ON	Time OFF
Lo/Motor	30 seconds	60 seconds
Lo/Motor	30 seconds	60 seconds
Lo/Motor	30 seconds	30 minutes

	MECH	INSP
NOTE: A minimum cool-down period of 40 minutes is recommended after engine running before injecting rinse fluid.		
NOTE: Compressor turbine blade washing is to be accomplished using potable water only at an ambient temperature of above 36°F. A potable water/methanol solution may be used with ambient temperatures below 36°F. See the P&W Maintenance Manual for appropriate solution strengths with varying ambient temperatures.		
1. Remove upper and lower forward cowlings.		
2. Place a suitable pan beneath the engine to recover wash solution.		
3. Remove one of the two igniter plugs.		
4. Install spray tube P/N PWC32271 in the igniter plug boss and tighten spray tube finger tight. Make sure the arrow on the tab of the spray tube is directed toward the propeller reduction gearbox and is parallel with the engine centerline.		
CAUTION: The cleaning solution supply hose should be supported in order to prevent damage to the spray tube.		
5. Connect a hose from a suitable cleaning rig to the spray adapter. The water/solution mixture should be delivered to the engine at 40 psi.		
6. Verify the engine ignition switch and engine bleed air is in the OFF position.		
7. Begin motoring the engine with the starter for 30 seconds; when the NG reaches 5%, introduce the wash solution to the engine.		
NOTE: Approximately ½ gallon of rinse solution will be consumed through the compressor turbine during a 30-second cycle.		
CAUTION: When using a water/methanol solution, perform an additional 30 seconds of dry motoring after each washing cycle to purge the engine of the volatile methanol fumes. Make sure recommended starter cooling periods of 40 minutes is observed.		
8. Repeat the washing cycle as required to remove contaminants from the turbine blades.		
9. Remove the spray tube assembly and reinstall the igniter plug.		
10. Perform two consecutive dry motoring runs while making sure the starter motoring limitations are not exceeded.		
11. Reinstall all engine cowlings.		

DOI - KODIAK 100 SERIES - 100 HOUR INSPECTION

ZONE	ACFT TYPE		SUPPLEMENTAL 100 HOUR INSPECTION REQUIREMENTS	MECH	INSP
ARCTIC	ALL	171	Floats - Inspect as required by OEM ICAs.		
ARCTIC	ALL	172	Skis - Inspect as required by OEM ICAs.		
ARCTIC	ALL	173	De-ice/Anti-ice System - Inspect as required by OEM ICAs.		
ARCTIC		174			
ARCTIC		175			
ARCTIC		176			
ARCTIC		177			
ARCTIC		178			
ARCTIC		179			
ARCTIC		180			
ARCTIC		181			
ARCTIC		182			
ARCTIC		183			
ARCTIC		184			
TEMPERATE	ALL	185	Floats - Inspect as required by OEM ICAs.		
TEMPERATE	ALL	186	Skis - Inspect as required by OEM ICAs.		
TEMPERATE	ALL	187	De-ice/Anti-ice System - Inspect as required by OEM ICAs.		
TEMPERATE		188			
TEMPERATE		189			
TEMPERATE		190			
TEMPERATE		191			
TEMPERATE		192			
TEMPERATE		193			
TEMPERATE		194			
TEMPERATE		195			
TEMPERATE		196			
TEMPERATE		197			
TEMPERATE		198			
	ALL	199	All panels opened for the inspection are closed and secure.		
	ALL	200	Run aircraft engine and leak check.		

DOI - KODIAK 100 SERIES - 100 HOUR INSPECTIONS

NOTES:

ASSURE PROPER MAINTENANCE RECORD ENTRIES HAVE BEEN MADE IAW 14 CFR 43.9

THE AIRCRAFT RECORDS CONSIST OF THE FOLLOWING;

1. AIRCRAFT, ENGINE & PROPELLER HARD LOGS.
2. ALL FORM 337'S, MAJOR REPAIR & ALTERATION.
3. COMPLIANCE LIST OF ALL PERTINENT AIRWORTHINESS DIRECTIVES.
4. MAINTENANCE SCHEDULE- LIST OF REQUIRED SPECIAL INSPECTIONS, COMPONENT OVERHAUL & TIME-LIFE LIMITS.
5. CURRENT & HISTORICAL WEIGHT & BALANCE STATUS & EQUIPMENT LIST
7. MINIMUM EQUIPMENT LIST AS REQUIRED.
8. SPECIAL FLIGHT AUTHORIZATIONS AND/OR SUPPLEMENTS

UNITED STATES DEPARTMENT OF THE INTERIOR

KODIAK 100 SERIES

200 HOUR SCHEDULED MAINTENANCE CHECKS

THE INSPECTION WORK SHEETS / PACKAGES IN THIS DOCUMENT ARE FOR THE 'UNITED STATES DEPARTMENT OF THE INTERIOR' AIRCRAFT ONLY.

Inspection Sheet - Block Explanation

Example

ACFT TYPE		EXAMPLE INSPECTION REQUIREMENTS	MECH	INSP
ALL	1	PY and P3 Line Heater Check: Perform an operational check of PY and P3 heaters.		
ALL	2	Conduct engine run-up checks as described below.		
ALL	3	EPA and Oil Drain Sump Cans: (If Equipped) Inspect can for leakage, condition, and security of installation. Completely drain can.	N/A	
A	**B**	**C**	**D**	**E**

Block A All - All Kodiak 100 Series aircraft.

Block B Each inspection and task is given a line item number in the 2nd column.

Block C Describes inspection tasks.

Block D Mechanic sign-off block.
N/A (Not Applicable) - should be used if the inspection cannot or should not be carried out due to (but not limited to) -

1. Serial number range.
2. Unit or option not installed on aircraft.
3. Previously complied with.
4. Climate zone applicability.

A note beside the N/A to indicate the reason for it is recommended.

Block E
The (white) INSP block should be initialed by an inspector who witnessed the task carried out by the mechanic and completed a final inspection and/or functional check in accordance with the line item requirements and relevant technical publications. The inspector shall not initial the INSP block until after the mechanic has initialed the MECH block. In a block that requires a Maintenance Inspector, he shall initial the white INSP block whenever N/A has been entered in the MECH block.

Climate Zone Supplemental Inspections and Servicing

Before commencing inspection and servicing, it must be confirmed which climate zone the subject aircraft is operated in. If the aircraft is above the 49th parallel it is in the Arctic Zone. If the aircraft is below the 49th parallel it is in the Temperate zone. The extra line items listed for the appropriate climate zone shall be added to the servicing, the not applicable climate zone line items shall be noted as N/A in the sign-off block.

Inspections: To be completed in accordance with this manual.

Repairs: To be completed in accordance with the appropriate Kodiak Maintenance Manual.

Acronyms in use

SID - Supplemental Inspection Document

CPCP - Corrosion Prevention and Control Program

NDI - Non Destructive Inspection

ICA - Inspection for Continued Airworthiness

STC - Supplemental Type Certificate

PSE - Principle Structural Element

N/A - Not Applicable (see MECH Block D above)

OEM - Original Equipment Manufacturer

IAW - In Accordance With

DOI - KODIAK 100 SERIES - 200 HOUR INSPECTION

'N' NUMBER:_____ MODEL: _____ AIRCRAFT S/N:_____

TACH HOURS:_____ AIRCRAFT TOTAL TIME:_____ ENG. SMOH:_____ PROP SMOH:_____

ACFT TYPE		200 HOUR INSPECTION REQUIREMENTS	MECH	INSP
ALL	1	Remove cowling, inspection plates, and all fairings as necessary to perform the inspections called for on this form. Thoroughly clean the aircraft and engine as instructed below.		

TITLE:	Window and windshield Cleaning Procedures	MECH	INSP
INSPECTION INSTRUCTIONS	**CAUTION:** Windows and windshields are easily damaged if handled improperly.		
	1. Position the aircraft inside a hangar or another suitable location to allow the aircraft surface to remain cool and out of direct sunlight.		
	2. Flood the window with clean water and feel by hand (jewelry removed) for potentially abrasive materials on the window surface.		
	3. Remove any abrasive matter from window surface by hand.		
	4. Wash the window surface with mild soap or detergent mixed with water. A clean cotton cloth may be used to transfer the soapy solution to the window surface but use extreme care to prevent scratching of the window surface.		
	5. If the contaminants on the surface of the window cannot be removed by the solution of mild soap and water, Type II Aliphatic Naphtha may be used as a cleaning agent. Apply the Type II Aliphatic Naphtha with a soft clean cotton cloth, and frequently refold the cloth to avoid scratching the windshield with any abrasive particles.		
	6. Rinse the window surface thoroughly with clean water and dry with a clean cotton cloth.		
	7. Hard polishing wax may be applied to the acrylic window surfaces using a clean soft cotton cloth. The polishing wax will mask most shallow scratches on the window surface.		

TITLE:	Aluminum Surface Cleaning Procedures	MECH	INSP
INSPECTION INSTRUCTIONS	Aluminum surfaces do not require extensive maintenance, but should not be neglected. The aircraft should be washed with clean water in order to remove any collected dirt. Non-alkaline grease solvents may be used to aide in the removal of oil and grease. There are various commercial grade cleaners available for aluminum surfaces.		

TITLE:	External Painted Surface Cleaning Procedures	MECH	INSP
INSPECTION INSTRUCTIONS	A. The painted surfaces on the aircraft can normally be kept bright by washing with a solution of soap and water, followed by a water-rinsing and then dried off with a clean dry cloth or chamois. Abrasive soaps or detergents should never be used due to their tendency to cause corrosion. Stubborn oil or grease spots can be removed with a cloth moistened with Stoddard solvent. Follow any cleaning procedure with a thorough rinse of the aircraft.		
	CAUTION: If equipped with the TKS Ice Protection System, don't polish the surface of the porous panels. Polish on the porous panels impairs the wetting qualities of the TKS and may degrade ice protection efficiency. Polishing may also block pores in the panels. See the TKS Ice Protection System Instructions for Continued Airworthiness.		
	B. To seal any minor scratches or chips and to protect the aircraft skins against corrosion, the aircraft should be waxed on a regular basis. A quality grade automotive wax containing a carnauba base should be used, and should be applied in accordance with the manufacturer's instructions. If the aircraft is operated around coastal waters or other salt water environments, it must be washed and waxed on a more frequent basis to help fight corrosion. Special attention should be given to protect and seal around the rivet heads, skin laps, piano hinges, and any other area susceptible to corrosion. A heavier coating of wax should be applied on the wing and tail leading edges, the engine cowling nose area, and the propeller spinner to help reduce abrasive wear in these areas. However, don't polish or wax porous panels on the leading edges of airplanes equipped with the TKS Ice Protection System. (See caution above.) Wax should be reapplied after cleaning the aircraft.		

TITLE:	Engine Compartment Cleaning	MECH	INSP
INSPECTION INSTRUCTIONS	A. Washing of the engine and its accessories should be accomplished routinely in order to remove oil, grease, corrosive salts, and other residue. A periodic cleaning should be accomplished during inspection periods to aid in discovering defects.		

	MECH	INSP
B. Protective equipment and clothing such as, a face shield, coveralls, and chemically-resistant gloves should be worn when working with strong cleaning agents. Use the least toxic cleaning agent that will effectively accomplish the task at hand.		
CAUTION: Cover the aircraft's propeller in order to prevent any alkaline cleaner from coming in contact with it during washing procedures.		
CAUTION: Do not use gasoline or other highly flammable materials for washing the aircraft or any of its components.		
CAUTION: Do not wash the engine while it is still hot or while it is running. Allow the engine to cool down prior to cleaning.		
C. Cleaning procedures should be performed in a well-ventilated area and fire fighting equipment should be readily available. No smoking and no open flames should be allowed within a 100 foot radius of the cleaning area. Compressed air should be set at the lowest effective pressure for use in drying, or as a cleaning agent. Steel wire brushes should not be used for cleaning the aircraft; a stiff, nylon or similar bristle brush may be used if one is needed to remove grease and grime.		

ACFT TYPE		**200 HOUR INSPECTION REQUIREMENTS**	MECH	INSP
ALL	2	Conduct engine run-up checks as instructed below.		
TITLE:		Engine Run-up Checks and Tests		

		MECH	INSP
INSPECTION INSTRUCTIONS	A. The following checklist is provided for performing engine run-ups for routine maintenance and inspection procedures.		
	CAUTION: Start and operate the engine per the Pilot's Operating Handbook/FAA Approved Flight Manual. Observe all power plant operating limitations.		
	NOTE: Refer to applicable Kodiak Manual for the Ground Performance Check Chart for the PT6A-34 engine.		

Reservoir Fuel Low/Fuel Selectors OFF Warning Test						
Control	Position	X	Results			
Engine	Start (IAW POH/AFM)					
Aux Buss	OFF					
Power Lever	IDLE					
Propeller Lever	MAX RPM					
Condition Lever	LOW IDLE					
Auxiliary Fuel Pump	ON					
Fuel Selector Controls	BOTH OFF		and Check:	Y	N	Comments:
			Fuel Selectors OFF Warning light above PFD1 Illuminates			
			Audible Chime Heard			
			FUEL OFF annunciator shown on PFD			
			RESERVOIR FUEL annunciator shown on PFD when fuel level in reservoir decreases			Delay no more than 10 minutes. **NOTE:** Continue with checklist while waiting for annunciator to appear.
Fuel Selector Controls	BOTH ON					

	MECH	INSP
Initials:		

DOI - KODIAK 100 SERIES - 200 HOUR INSPECTION

Electrical Power Check						
Control/System	Position/Condition	X	Results			
Power Lever	IDLE					
Propeller Lever	MAX RPM					
Condition Lever	LOW IDLE					
Generator	ON					
Alternator	ON		and Check:	Y	N	Comments:
			Note Alternator Amps			
			Note Generator Amps			
Left Pitot Heat	ON		and Check:	Y	N	Comments:
			Alternator amps increase with applied load			
Right Pitot Heat	ON		and Check:	Y	N	Comments:
			Generator amps increase with applied load			
			Check M Bus: 27.0V-28.2V			

Electrical Power Check						
Control/System	Position/Condition	X	Results			
Generator	OFF		and Check:	Y	N	Comments:
			Alternator and batteries carry entire electrical load.			
			GEN FAIL annunciator shown on PFD			
			M Bus: 24-25.5V (Depending on battery voltage)			
			E Bus: 28.3-29.1 V			
Generator	ON					
Alternator	OFF		and Check:	Y	N	Comments:
			Generator carries entire electrical load.			
			ALTERNATOR FL annunciator shown on PFD			
			M Bus: 27.0-28.2 V			
			E Bus: Approx.. 1 V less than Bus M volts			
Generator & Alternator	OFF		and Check:	Y	N	Comments:
			Batteries carry entire electrical load			
			ALTERNATOR FL annunciator shown on PFD			
			GEN FAIL annunciator shown on PFD			
Generator	ON					
Alternator	ON					

	MECH	INSP
Initials:		

DOI - KODIAK 100 SERIES - 200 HOUR INSPECTION

Engine Idle Check								
Control/System	Position/Condition	X	Results					
Power Lever	IDLE							
Propeller Lever	MAX RPM							
Condition Lever	LOW IDLE		and Check:	Y	N	Comments:		
			Electrical Load approx. 50 amps					
			Ng speed 52.5-55.5%					
Condition Lever	HIGH IDLE		and Check:	Y	N	Comments:		
			Ng speed 68-72%				MECH	INSP
						Initials:		

Propeller Governor Operational Check								
Control/System	Position/Condition	X	Results					
Propeller Lever	MAX RPM							
Condition Lever	LOW IDLE							
Power Lever	ADVANCE until Np stabilizes at 2200 RPM +0/-10 RPM							
Power Lever	ADVANCE 10% Ng		and Check:	Y	N	Comments:		
			Np stabilizes at 2200 RPM					
Power Lever	IDLE							
Propeller Lever	LOW RPM							
Power Lever	ADVANCE until Np stabilizes at approximately 1900-2030 RMP							
Power Lever	ADVANCE 10% Ng		and Check:	Y	N	Comments:		
			Np stabilizes at 1900-2030 RPM					
Power Lever	IDLE							
Propeller Lever	MAX RPM						MECH	INSP
						Initials:		

Propeller Overspeed Governor Operational Check								
Control/System	Position/Condition	X	Results					
Propeller Lever	MAX RPM							
Overspeed Governor Test Switch	Press and Hold							
Power Lever	ADVANCE until Np stabilizes at 2070 RPM +/- 50 RPM							
Power Lever	ADVANCE Ng 10%		and Check:	Y	N	Comments:		
			Np stabilizes at 1900-2030 RPM					
Power Lever	IDLE							
Overspeed Governor Test Switch	Release							
Power Lever	ADVANCE		and Check:	Y	N	Comments:		
			Governor Limits to 2200 RPM				MECH	INSP
						Initials:		

DOI - KODIAK 100 SERIES - 200 HOUR INSPECTION

Power Lever Reverse Ng Speed Pickup Check								
Control/System	Position/Condition	X	Results					
Propeller Lever	MAX RPM							
Condition Lever	HIGH IDLE		and Check:	Y	N	Comments:		
			Note Np RPM					
			Note Ng %					
Power Lever	Move slowly to BETA Range		and Check:	Y	N	Comments:		
			Note Np RPM					
			Note Ng %					
Power Lever	MAX REVERSE		and Check:	Y	N	Comments:		
			Max reverse torque is a minimum of 700 ft. lbs.					
			Propeller RPM does not exceed 2100 RPM					
Power Lever	IDLE		and Check:	Y	N	Comments:	MECH	INSP
						Initials:		

Emergency Power Lever Annunciator Test								
Control/System	Position/Condition	X	Results					
Power Lever	IDLE							
Propeller Lever	MAX RPM							
Condition Lever	LOW IDLE							
Emergency Power Lever	Slowly ADVANCE		and Check:	Y	N	Comments:		
			ITT, TRQ, and Ng limits at all time					
			Keep Ng increase at less than 4% per sec.					
			EMER PWR LVR annunciator shown on PFD					
Emergency Power Lever	SLOWLY increase Ng to 67% Ng							
Emergency Power Lever	SLOWLY reduce to NORMAL (Full Aft)		and Check:	Y	N	Comments:		
			Keep Ng decrease at less than 4% per sec.					
			EMER PWR LVR annunciator extinguishes				MECH	INSP
						Initials:		

ACFT TYPE		**200 HOUR INSPECTION REQUIREMENTS**	MECH	INSP
ALL	3	Engine Inlet and Inertial Air Particle Separator (as equipped, either with Single-actuated or Dual actuated): Inspect for security of installation, condition and proper freedom of movement while accomplishing an operational check. Inspect door pivot points for proper condition. Check actuator(s) and linkage for proper operation and freedom of movement. Check for full opening of bypass door through inlet duct. Lubricate the separator actuators with LPS 1.		
ALL	4	Engine Cowling - for cracks, and defects.		
ALL	5	Inspect Engine AGB Oil Scavenge Screen IAW Pratt & Whittney Manual.		
ALL	6	PY and P3 Line Heater Check: Perform an operational check of PY and P3 heaters.		
ALL	7	Igniters: Perform an operational check by turning on the master switch and ignition switch while verifying illumination of the IGNITION ON annunciator and proper function of both igniters.		
ALL	8	Flaps - Trim Compensation Unit Check: Perform a Pitch Trim Compensation Unit Functional Check.		

DOI - KODIAK 100 SERIES - 200 HOUR INSPECTION

ACFT TYPE		200 HOUR INSPECTION REQUIREMENTS	MECH	INSP
ALL	9	Elevator Trim Wheel and Indicator: Inspect the trim wheel for proper condition and security of installation. Operate the trim wheel and electric trim to verify proper function, freedom of movement and full range of motion. Verify the indicator functions properly. Perform an electric trim operational check in accordance with the POH/AFM.		
ALL	10	Autopilot Unit and Control Switches: Check for security of installation and proper operation. Perform an operational check of the autopilot system.		
ALL	11	Flap System: Perform an operational check of the flaps through their full range of travel. Inspect for loose rivets, corrosion, cracks, wrinkles, and dents. If so equipped, inspect vortex generators for condition and security. Inspect flap attach points for proper security and condition. Check flap operation for any erratic movement, interference, or binding. Check for proper operation of the flap position indicator.		
ALL	12	Aileron Trim Tab: Perform an operational check of the electric aileron trim system. Inspect ram attaching hardware for unusual wear and security of installation. Perform an Aileron Trim Tab vertical free play inspection (maximum allowed is 0.085").		
ALL	13	Pitot/Static Tube Heat: Operate the pitot heat for approximately 30 seconds and verify proper operation of pitot heat. Turn pitot tube heat OFF.		
ALL	14	Stall Warning System (If Equipped with a Stall Warning Computer): Perform an operational check of the lift transducer, stall warning horn, stall warning horn relay, and stall warning test switch. (Ground Check.)		
ALL	15	Stall Warning System (if not equipped with a Stall Warning Computer): Perform an operational check of the warning vane and horn. (Ground Check.)		
ALL	16	Exterior Lighting: Check for proper operation of beacon, strobe, NAV, taxi, pulse, and landing.		
ALL	17	Cabin Electrical Heating Units: Inspect for security of installation, Foreign objects, and signs of overheating. Perform an operational check.		
ALL	18	Exterior Fuselage: Inspect the exterior of the fuselage for general condition. Inspect skins for damage, corrosion, and loose or working fasteners.		
ALL	19	Interior Fuselage: Inspect the interior fuselage for corrosion, loose or working fasteners, deformation, and general condition.		
ALL	20	Exterior Placards and Markings: Verify presence, legibility, and security of attachment. See appropriate Kodiak Manual for requirements.		
ALL	21	Interior Placards and Markings: Verify presence, legibility, and security of attachment. See appropriate Kodiak Manual for requirements.		
ALL	22	Propeller Blades: Wash the blades, inspect for nicks, gouges, scratches, depressions, looseness, cracks, security, and condition.		
ALL	23	Propeller Spinner: Remove; inspect for cracks, security, condition, and wash.		
ALL	24	Propeller Spinner Bulkhead: Inspect for cracks, security, and condition.		
ALL	25	Propeller Hub: Inspect exposed area for wear, cracks, security, condition and loose/missing hardware.		
ALL	26	Propeller Mounting: Inspect for proper mounting and visually inspect for security of installation.		
ALL	27	Propeller Beta Feedback Ring: Inspect ring for security of installation, condition, and any warping. Inspect the carbon block for excessive wear and any possible damage (carbon block side clearance must be 0.001" to 0.010"). Inspect the beta linkage for security and condition.		
ALL	28	Propeller: Inspect for grease and oil leaks. Perform a preload plate set screw inspection.		

TITLE:	Preload Plate Set Screw Check		
		MECH	INSP
INSPECTION INSTRUCTIONS	1. Manually rotate the propeller and listen for possible noise caused by a broken set or jam nut that may be loose in the propeller hub.		
	2. With the propeller blades in the feathered position, make sure the feather (low) stop nuts are seated on the reverse adjustment sleeve.		
	3. If there is noise indicating a loose part or the propeller blades do not go completely to feather, remove the propeller. Send the propeller to a repair station for disassembly and inspection for a possible broken preload set screw.		
	NOTE: If a broken set screw is found, the propeller must be inspected for damage that may have been caused by the broken set screw, and the incident must be reported to the Hartzell Product Support Department.		

DOI - KODIAK 100 SERIES - 200 HOUR INSPECTION

ACFT TYPE		200 HOUR INSPECTION REQUIREMENTS	MECH	INSP
ALL	29	Battery Cables: Inspect for security, condition, and routing. Inspect battery terminal boots for deterioration, overheating, or burning.		
ALL	30	Battery Boxes: Inspect for corrosion, security, and condition. Inspect battery hold-down mechanism for proper function.		
ALL	31	Alternator: Inspect mounting for proper security, condition, and leaks. Check terminal boot for security and condition. Inspect electrical leads for damage and security.		
ALL	32	Sealed Lead Acid Batteries: Inspect batteries for general security and condition. Check battery terminals for evidence of overheating and burning.		
ALL	33	Firewall Mounted Fuel Filter: Inspect for leaks, corrosion, security of installation, and general condition. Inspect and clean filter.		
ALL	34	Brake System Reservoir: Check for security of installation, condition, and leaks. Check for proper fluid level and any contamination		
ALL	35	Engine Mount - for cracks, looseness of mounting, and looseness of engine to mount.		
ALL	36	Engine Mount Elastomers - for poor condition and deterioration.		
ALL	37	Engine External Tubing, Wiring, Control Linkages, and Hose Assemblies: All accessible connections, clamps and brackets for attachment. **NOTE:** Inspect accessible lockwire and safety cable for security and installation. Check for wear, chafing, cracks and corrosion. **NOTE:** Visually inspect insulated air tubes for sign of swelling, cracking, bulging of rubber sheath material. Replace as necessary. Check fuel and oil lines for leaks.		
ALL	38	Pay particular attention to rear linkage cam box, fuel control unit arm, telescopic rod and rod end fittings. Disconnect rod ends and clean using solvent (PWC11-027) or (PWC11-031). Lubricate with light grease (PWC04-001) after engine external wash. Examine rod end for corrosion, roughness in rotation, side play and radial play. After lubrication reinstall rod ends and torque to specified value. Check free movement of linkage.		
		(1) Visually inspect the actuating levers, control cam, and control lever mounting bracket for cracks. Cracks are not permitted.		
		(2) Visually inspect the reversing lever guide pin bracket assembly on both faces of the fillet weld area around the guide pin for cracks. If cracks are found and/or fillet weld is on one face only, replace the bracket assembly (Ref. SB1416).		
		(3) Examine the parts for minor surface damage such as scores, nicks, scratches, and gouges. Minor surface defects may be cleaned up by local blending with a fine stone or crocus cloth (PWC05-061) making sure that all sharp edges and high spots are removed.		
		(4) Inspect the pin and bolt holes in each part and the slot in the control cam, for burrs and/or chipped edges. Clean up minor damage with a suitable Swiss file or fine stone.		
		(5) Examine the grooved pin for burrs, nicks, scores and similar defects on serrations which might interfere with the fit between mating parts. Clean up minor defects with a fine stone and check the fit of mating parts.		
		(6) Inspect the flexible shaft (wire rope) casing for cuts, dents, cracks, kinks, and similar defects which might prevent free movement of the internal wire rope. Minor damage is acceptable, providing the wire rope will operate freely without binding.		
		(7) Check the wire rope for breaks in the wires, twisting, kinking, and for separation of the reverse wound coils. Reject the wire rope if damaged. Repair is not permitted.		

ACFT TYPE		200 HOUR INSPECTION REQUIREMENTS	MECH	INSP
ALL	39	Air Inlet Screen: Check for cleanliness.		
		(1) Inspect the air inlet screen wire mesh for cleanliness and/or damage. Screens with broken wire mesh must be replaced. Clean undamaged screens (Ref. Cleaning/Painting).		
		(2) On early PT6A-34 engines Post-SB1191: Check the spacer (5, Fig. 201) for security; rebond as necessary.		
		(3) For PT6A-34AG engines with the bleed air case; inspect the case for general condition and surface damage. Check for security of the packing material.		

ACFT TYPE		200 HOUR INSPECTION REQUIREMENTS	MECH	INSP
ALL	40	Gas Generator Case: Inspect external surfaces, and fireseal mount ring brackets for cracks, distortion, and corrosion.		
		(a) Examine for general condition, including cracks, distortion, corrosion and evidence of overheating.		

	MECH	INSP
(b) Minor corrosion on exposed surface of gas generator case may be removed. **NOTE:** If condition of gas generator case indicates further inspection is required, remove fuel manifold adapters and spark igniters.		
1) Machined surfaces (bosses and pads) with corrosion pitting less than 0.010 inch deep and less than 75 percent of the surface is acceptable without repair.		
(c) On engines INSTALLED in the airframe, examine the engine mounts for attachment and condition (Ref. Aircraft Maintenance Manual).		
(d) On engines NOT INSTALLED in the airframe, examine the condition of the mounting pads and threaded holes. Damage to the threaded holes may be repaired.		

ACFT TYPE		200 HOUR INSPECTION REQUIREMENTS	MECH	INSP
ALL	41	Fireseal Mount Rings: Check for cracks and attachment of brackets and seals.		
		(1) Examine the mount ring halves (Pre-SB1445 or Post-SB1445) for attachment, damage and condition. **NOTE:** For the external tubes/lines passing through the mount rings, refer to relevant chapters the maintenance manual.		
		(2) Examine the circumferential packing material for security (Pre-SB1445 or Post-SB1445). A loose strip may be rebonded.		
		(3) Examine the rear fireseal mount ring halves for attachment, damage and condition. **NOTE:** For the external tubes/lines passing through the mount rings, refer to the relevant chapters in this manual.		
		(4) Examine the circumferential insulating strips for attachment. Loosened strips may be rebonded.		
		(5) Inspect mount ring spacers (Post-SB1441) for damage and condition. Replace as necessary.		

ACFT TYPE		200 HOUR INSPECTION REQUIREMENTS	MECH	INSP
ALL	42	Exhaust Duct: Check for cracks and distortion.		
		(1) For periodic, hot section, or unscheduled inspections such as engine sudden-stoppage or suspected aircraft heavy landing, examine the exhaust duct critically for evidence of the following:		
		(a) Examine the outer surface condition for buckling, ripples or similar distortion.		
		(b) Inspect exhaust port flanges for cracking. Cracks not exceeding 0.500 inch in length and do not progress into the stitch weld or cracks in a tangential direction not exceeding 1.000 inch long are acceptable provided they are stop drilled with a 1/16 (0.0625) inch drill.		
		(c) Examine the outer surface, particularly in the vicinity of Flanges A and C and the exhaust ports, for cracking in the metal skin, welds or flange bolt holes. Check the T5 system exit tube for security. The presence of cracks requires the removal of the exhaust duct for overhaul.		
		(d) Check for the integrity of internal structure through the exhaust ports. **NOTE:** Refer to the Aircraft Maintenance Manual for removal/installation of the exhaust stubs.		
		(e) Using suitable lighting or a borescope, examine the internal structure as far as possible for cracks, looseness and distortion.		
		(2) For engines that have incorporated SB1610 since the last overhaul and that exhibit inferior welds.		
		(a) Inspect for cracks at each minor inspection and repeat the inspection at intervals not to exceed 150 hours of flight time.		
		(b) If cracks are found, repeat the inspection at intervals not to exceed 25 hours flight time. All cracks will be marked with a suitable metal marking pencil (PWC05-018), and the length, location, duct hours and Time Since Overhaul recorded.		
		(c) Using 5x magnification, visually inspect the forward area of the exhaust duct for cracks, from the propeller reduction gearbox mounting flange to 2 inches aft around the entire circumference of the duct.		

	MECH	INSP
1) Exhaust ducts are considered serviceable provided; a) There are no more than 3 cracks. b) The total length of all cracks does not exceed 2 inches. c) No one crack exceeds 1 inch. d) When there are 2 or 3 cracks they must be separated by a minimum of 6x the length of the longest crack or 3 inches, whichever is greater. e) The growth rate of any crack does not exceed 0.015 inch/hour of operation.		
(3) With the power turbine vane ring and stator housing removed (Ref. Fig. 201):		
(a) Inspect the exhaust duct (1) for cracks at Flange D in the location shown in detail A. Close visual and dye penetrant inspection should be carried out. When cracks are indicated, remove the exhaust duct for overhaul.		

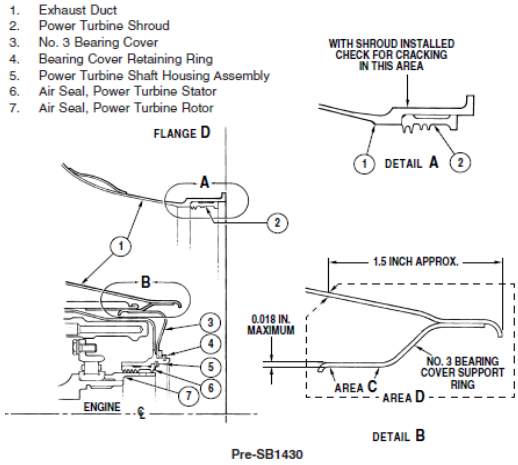

Removal/Installation of Exhaust Duct
Figure 201

	MECH	INSP
(4) With the power turbine disk removed:		
(a) Inspect the installed No. 3 bearing cover (3) Pre-SB1430. If evidence of looseness or rotation is present, refer to appropriate manual.		
(b) Inspect the exhaust duct (1) area C where the bearing cover (3) Pre-SB1430 outside diameter mates with the exhaust duct. Light fretting may be polished out to the minimum material thickness of 0.018 inch. Evidence of the bearing cover rotation requires close visual and fluorescent dye penetrant inspection. The presence of cracks requires the removal of the exhaust duct for overhaul.		
(c) Inspect the end of the ski jump Pre-SB1430 area D, Detail B, for cracks using fluorescent dye penetrant inspection. No cracks allowed.		

ACFT TYPE		200 HOUR INSPECTION REQUIREMENTS	MECH	INSP
ALL	43	Propeller Shaft Seal: Check for oil leaks.		
		A. Inspection of Oil Seal Retaining Ring or Ring Halves		
		(1) Examine oil seal retaining ring or ring halves for nicks, burrs and surface damage. Light stoning of damaged surfaces is acceptable.		
		(2) Check integrity of Post-SB1381/Post-SB1652 felt strip inserts in oil seal retaining ring halves . If worn or damaged, retaining ring halves must be shipped to an approved overhaul facility for felt strip insert replacement.		
		B. Inspection of Oil Seal Runner		
		(1) Examine visible area of seal runner for nicks, burrs and other surface damage caused by tools during removal of seal. No repair is acceptable. Ship power output section of engine to an approved overhaul facility for replacement of defective seal runner.		

	MECH	INSP
NOTE: If applicable, check the integrity of the sealant (PWC09-001) between the forward lip of the oil seal runner and propeller shaft. Replace if necessary.		
(2) Examine the propeller shaft oil seal contact area on seal runner for wear (grooving). If concentrated wear is present, installation of an alternate offset propeller shaft oil seal should be considered. This offset seal will contact the runner at a different location (Ref. IPC).		

ACFT TYPE		200 HOUR INSPECTION REQUIREMENTS	MECH	INSP
ALL	44	Accessories: Inspect attachment and linkages, air, oil and fuel lines. **NOTE:** Visually inspect insulated air tubes for sign of swelling, cracking, bulging of rubber sheath material. Replace as necessary. Inspect for oil and fuel leaks as applicable. Check starter-generator gearshaft splines for wear (At starter-generator removal/replacement only)		
		(1) Insulated Tube Assemblies		
		(a) Examine flanged end fitting for elongated holes.		
		(b) Examine tube assemblies IAW applicable engine maintenance manual.		
		(c) Blend out damage that does not exceed specified limits. Replace tube assemblies damaged beyond limits.		
		(d) Examine the insulation on the pneumatic tube assemblies for cuts in the outer rubber sheath. Surface cuts up to three inches long may be repaired.		
		(e) If surface damage exceeds specified limits above, but depth is superficial, sheathing may be repaired by replacement of damaged portion.		
		(f) Examine the metal braid and electrical lead on heated tubes for cuts. Up to three broken wires per plait, or six broken wires per linear foot, are acceptable. Replace the tube assemblies where metal braid is chafed or worn through to the lead conductors.		
		(2) For Post-SB1495 Engines Air Filter Housing Drain Valve Assembly.		

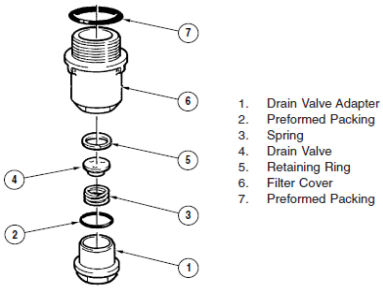

Post-SB1495 Engines

Removal/Installation of Air Filter Housing Drain Valve
Figure 205

	MECH	INSP
(a) Filter Cover (6):		
1) Check lockwire holes for damage (tearing, cracks).		
2) Check threads for damage.		
3) Check that contact area is free of nicks and/or scratches.		
(b) Retaining Ring (5):		
1) Check for distortion. Replace if distorted.		
(c) Drain Valve (4):		
1) Check that contact area is free of nicks and/or scratches.		
2) Make sure drain holes are clear and unobstructed.		

	MECH	INSP
(d) Valve Spring (3):		
1) Check for corrosion and/or damage. Reject if unsatisfactory.		
(e) Drain Valve Adapter (1):		
1) Check threads for damage.		
2) Check that contact area is free of nicks and/or scratches.		
3) Check flats and lockwire holes are free of damage.		
4) Check retaining ring groove. Reject if damaged or worn.		
A. Accessory Gearshaft Spline Wear Check.		

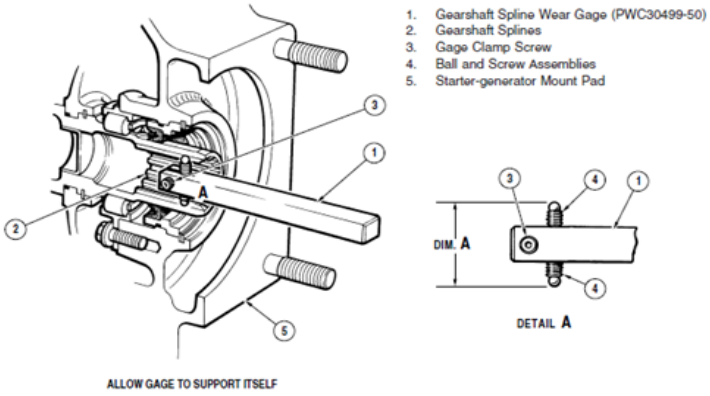

Accessory Gearshaft Spline Check
Figure 204

	MECH	INSP
NOTE: The accessory gearshaft must be checked for spline wear at related component removal/installation (Ref. Aircraft Maintenance Manual).		
(1) Release the clamp screw (3) and adjust the screw assemblies (4) to obtain the dimension of 0.660 inch over the ball ends. Tighten the clamp screws and recheck the dimension.		
(2) Tilt the gage (1), outer end uppermost, and insert the gage (PWC30499-50) into the shaft centerbore until the ball ends are approximately midway along vertically opposite splines.		
(3) Gradually release the gage, allowing it to support itself in the shaft. If the gage is self-supporting, the gearshaft is considered serviceable. If the gage extension falls below the horizontal, the gearshaft must be replaced.		
B. Oil Filler Cap, Dipstick/Gage Assembly and Oil Filler Tube.		

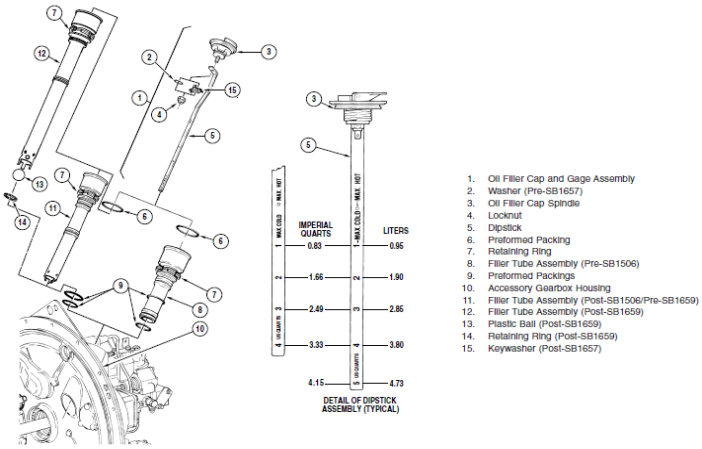

Removal/Installation of Oil Filler Cap, Dipstick/Gage Assembly and Oil Filler Tube
Figure 203

	MECH	INSP
(1) Examine the filler cap and level indicator assembly, and the oil filler tube for corrosion and signs of damage.		
(2) For Post-SB1506 Engines: Make sure the ball moves freely in the check valve of the filler tube.		
(3) Check the spring-loaded locking feature of the cap for serviceability. If the force required to depress/lift the handle is outside the limit (8 to 11 lbs.), remove the cap and tighten/loosen the self-locking nut to meet the required limit.		
NOTE: Ensure the self-locking nut is securely fastened (refer to SB1637 - Inspection of Oil Tank Filler Cap).		
(4) Check the gage blade for security and visible damage.		
(5) When the cap is locked, there should be no movement. If movement is found, replace the cap.		
C. Inspection of Scavenge Pump Inlet Screen		

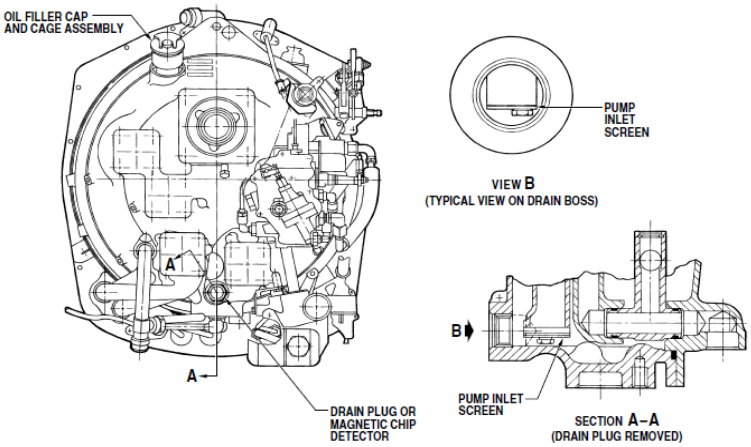

Scavenge Pump Inlet Screen Inspection
Figure 205

	MECH	INSP
(1) Remove oil drain plug located on the AGB housing (Ref. Fig. 205).		
NOTE: For engine equipped with an AGB chip detector, remove the chip detector.		
(2) Collect drained oil in a clean container and check for any debris IAW maintenance manual.		
(3) Use a mirror and suitable light source (or borescope) and inspect the scavenge oil pump inlet screen for carbon or debris IAW appropriate maintenance manual.		
NOTE: Any foreign material found blocking the screen or contained in the oil should be identified. Look especially for paint flakes approximately 1/8 inch to 1/2 inch in diameter IAW appropriate manintenance manual.		
(4) If carbon or debris is present, clean the inlet screen (Fig. 205).		
(5) Install the drain plug on the AGB housing IAW appropriate maintenance manual.		
NOTE: For engine equipped with an AGB chip detector, install the chip detector.		
(6) Replenish the drained oil (if not contaminated by foreign material) in oil tank.		

ACFT TYPE		200 HOUR INSPECTION REQUIREMENTS	MECH	INSP
ALL	45	First-stage Compressor Rotor: Do a visual inspection with a mirror or a borescope. **NOTE:** If any FOD has caused the engine to become prone to engine surges or causes unusual compressor whining, the large bent airfoil will make the whining sound. Remove the engine immediately.		

ACFT TYPE		200 HOUR INSPECTION REQUIREMENTS	MECH	INSP
ALL	46	Hot Section: Examine with borescope. In conjunction with periodic fuel nozzle leak and function tests. For Post-SB1590 engines NOT incorporating SB1627 or SB1628: (1) Analyse engine condition trend monitoring system data on a weekly basis. No baseline HSI is required. (2) If the analysis indicates that the engine is deteriorating, then do a hot section inspection.		
		Hot Section Inspection (Ref. Fig. Appropriate HSI Sheets)		
		(1) For a normally scheduled HSI, do a ground performance run.		
		(2) Remove the RGB strainer, the main oil filter and the chip detector(s). Verify the debris.		
		(3) Verify Compressor for FOD.		
		(4) Remove power section/power section module.		
		(5) Measure the radial CT blade tip clearance and remove compressor turbine disk and blade assembly IAW appropriate manual.		
		(6) Remove combustion chamber liner IAW appropriate manual.		
		NOTE: Should it be necessary during HSI, to make a more detailed inspection of components which remain installed, those components should be removed IAW appropriate manual.		
		(7) Verify components as per Pratt and Whitney PT6 Maintinance Manual Table 603.		
		(8) If HSI is done due to over temperature, remove PT stator housing IAW appropriate manual.		
		(9) If necessary, calibrate and verify aircraft instrumentation after engine assembly.		
		(10) Do a ground performance run and inspect BOV closing point IAW appropriate manual.		
		(11) If a significant T5 increase is noted after ground performance run, borescope hot section for CT blade shroud rub.		

ACFT TYPE		200 HOUR INSPECTION REQUIREMENTS	MECH	INSP
ALL	47	Oil System: Check oil level. **NOTE:** For oil change recommendations, refer to SB1001. Check condition and locking of oil filler cap. Oil filter elements and secondary screen (coarse hat-type screen attached to the inner end of the filter). Elements must be inspected and cleaned. Light traces of sediment only may be removed from the main filter screen. All other contamination requires replacement of filter element. Any foreign material found in main oil filter or on chip detector, should be identified before further inspection/operation. **NOTE:** Inspect initially at 100 hours with extension to relevant airframe zone inspection based on inspection results but not to exceed 200 hours. **NOTE:** If the engine has a recent history (within 200 flight hours) of generating carbon debris; do the inspection at 100 hours interval and replace the filter element at 300 hours interval. Refer to appropriate manual for the instructions to start oil filter inspection again and for the oil filter replacement intervals. **NOTE:** If carbon like deposits are found, drain accessory gearbox oil into a clean container and examine debris. Varnish flakes are non metallic and are usually dark on one side and shiny, similar to bronze, on the other side. They are hard and will not form into paste when rubbed between fingers.		
ALL	48	Check magnetic chip detector(s) for continuity, open circuit must exist indicating no contamination at pole tips. If continuity is there, remove and examine for contamination. Any foreign material found on the chip detector or in the main oil filter must be identified before further inspection/operation. Refer to applicable manual. (See NOTE 3). **NOTE 1:** FOR SINGLE ENGINE AIRCRAFT, If the chip detector is connected to a cockpit indicating system, examine the chip detector initially at 100 hours with extension to relevant airframe zone inspection based on the inspection results, but not more then 200 hours. **NOTE 2:** FOR TWIN ENGINE AIRCRAFT, If the chip detector is connected to a cockpit indicating system, examine the chip detector initially at 100 hours with extension to relevant airframe zone inspection based on the inspection results, but not more than 400 hours. **NOTE 3:** While the chip detector is removed, examine with both poles bridged. With poles unbridged, inspect if continuity exists, and if no continuity exists, replace the chip detector.		

ACFT TYPE		200 HOUR INSPECTION REQUIREMENTS	MECH	INSP
ALL	49	Bridge chip detector(s) magnetic pins with suitable jumper, and using a suitable ohmmeter, check continuity between connector pins. If continuity does not exist, replace chip detector. Any foreign material found on chip detector or in main oil filter should be identified before further inspection/operation. Refer to appropriate maintenance manual. **NOTE:** For aircraft equipped with an airframe supplied indicating device, the integrity of the complete indicating system can be checked by re-attaching the electrical connector to the removed chip detector and check for chip indication when magnetic poles are bridged. Closed circuit condition must exist.		
ALL	50	Check scavenge oil pump housing for leaks.		
ALL	51	Check the AGB internal scavenge oil pump inlet screen IAW appropriate maintenance manual. Collect drained oil. Using a mirror and a flashlight inspect the scavenge oil pump inlet screen. Any foreign material found blocking the screen or contained in the oil should be identified before further operation.		
		A. Cleaning of Scavenge Oil Pump Inlet Screen (Ref. Fig. 205)		

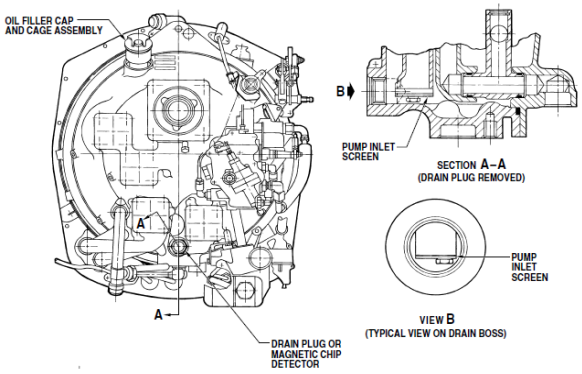

Scavenge Pump Inlet Screen Inspection
Figure 205

	MECH	INSP
(1) If carbon is present on the screen mesh, loosen with a suitable small plastic scraper or similar nonmetallic scraper. Do not deform the screen mesh.		
(2) Flush any carbon residue from the AGB as follows:		
(a) Remove the oil filler cap.		
(b) Remove the retaining ring and the oil filler tube.		
(c) Place a suitable container under the AGB drain, and pour approximately 34 fluid ounces (one liter) of new engine oil (PWC03-001) heated to 122°F (50°C), into the AGB filler tube opening. Make sure oil does not enter oil tank.		
(d) Let oil drain. Examine inlet screen and surrounding area to make sure carbon residue is removed. If not, repeat flushing procedure above.		
(3) Install oil filler tube.		
(4) Refill oil tank IAW appropriate maintenance manual.		

ACFT TYPE		200 HOUR INSPECTION REQUIREMENTS	MECH	INSP
ALL	52	Fuel System: Check fuel for water contamination. Check fuel pump for installation and leaks IAW appropriate manual. **NOTE:** If airframe fuel boost pump fails or is inadvertently left off for an accumulative time in excess of 10 hours, the engine driven fuel pump must be removed and replaced. The removed pump should be sent to an approved overhaul facility. **CAUTION:** ON NEW AIRCRAFT, CHECK FILTER AFTER EACH FLIGHT UNTIL NO CONTAMINATION IS EVIDENT. CHECK AFTER FIRST FLIGHT OR GROUND RUN WHENEVER ANY COMPONENT UPSTREAM OF FILTER IS REPLACED.		
ALL	53	Check outlet filter for foreign matter or distortion IAW appropriate manual. Install new filter as service conditions dictate, not to exceed 600 hours and when fuel system contamination is suspected.		

DOI - KODIAK 100 SERIES - 200 HOUR INSPECTION

ACFT TYPE		200 HOUR INSPECTION REQUIREMENTS	MECH	INSP
ALL	54	Check drain valve for installation and leaks IAW appropriate manual.		
ALL	55	Check FCU for installation, linkages and pneumatic tubes IAW appropriate manual.		
ALL	56	For Post-SB1568: Do a deceleration check IAW appropriate manual. **NOTE:** Not required for FCU identified with ‘‘RE52’’, ‘‘SB 73-3’’ or with a serial number that contains the letter F as prefix.		
ALL	57	For engines fitted with a manual override on the fuel control, check FCU Manual Override System for static operation.		
ALL	58	Check FCU for bearing wash-out, indicated by blue dye (grease and fuel mixed) at FCU vent .		
ALL	59	Check starting flow control/flow divider for installation and leaks IAW appropriate manual.		
ALL	60	Leak test and function test fuel manifold adapter and nozzle assemblies IAW appropriate manual. **NOTE 1:** Do the periodic borescope inspection of the hot section components in conjunction with the following tests. **NOTE 2:** Regular fuel nozzle maintenance is important for hot section durability. Inspection recommended at routine intervals according to: Engines ON fuel nozzle in-situ cleaning program, test fuel nozzles and repair as necessary. Where fuel quality is not sure, and for operators new to PT6A operation, inspection is recommended at 400 hours initially, with extension based on the operators experience and rejection rate, not more than 200 hours. For other operators, inspection is recommended at 600 hours initially, with extension based on the operators experience and rejection rate, not more than 200 hours. Engine NOT ON fuel nozzle in-situ cleaning program, test fuel manifold adapter. Where fuel quality is not sure, and for operators new to PT6A operation, cleaning/inspection is recommended at 200 hours initially, with extension, based on the operators experience and rejection rate, not more than 200 hours. For other operators, inspection is recommended at 400 hours initially, with extension based on the operators experience and rejection rate, not more than 200 hours.		
ALL	61	Check oil-to-fuel heater installation IAW appropriate manual.		
ALL	62	Ignition System: Check ignition exciter/current regulator for installation and condition IAW appropriate manual.		
ALL	63	Check ignition cables for chafing, wear and installation IAW appropriate manual.		
ALL	64	Check spark igniter/glow plugs for cleanliness and erosion. Check function IAW appropriate manual. **NOTE:** Inspect initially at 100 hours with extension to relevant airframe zone inspection based on inspection results but not to exceed 200 hours.		
ALL	65	Pneumatic System: Check P3 filter for installation IAW appropriate manual.		
ALL	66	Inspect pneumatic tubes and lines for cracks and damages especially at the end fittings and joints.		
ALL	67	Clean or replace filter, dependent on condition, service experience or environment IAW appropriate manual. **NOTE:** Visually inspect the P3 filter for corrosion. If the filter shows presence of corrosion, discard the filter and replace with a new filter.		
ALL	68	Clean and inspect Post-SB1495 P3 filter drain valve housing assembly IAW appropriate manual. **NOTE:** Filter contamination is greatly influenced by particular operating conditions and environment, inspection intervals may be modified accordingly.		
ALL	69	Propeller Governor and Overspeed Governor: Inspect for leaks, security, and condition. Inspect security of installation on electrical connections.		
ALL	70	Engine Compartment: Inspect for leakage, general condition, damage, and security.		
ALL	71	Induction Air Plenum: Remove access shroud, inspect for condition, security of installation, and cracks.		
ALL	72	Engine Air Inlet Screen: Inspect for security of installation, condition, and cleanliness. (If inlet screen is dirty the compressor section is likely to also be dirty, and a compressor wash is recommended).		
ALL	73	Gas Generator Case: Inspect for corrosion, distortion, and cracks.		
ALL	74	Engine Accessories: Inspect for leakage, condition, and security of installation.		
ALL	75	Inspect fuel nozzles as instructed below.		

	MECH	INSP
CAUTION: USE EXTREME CARE WHEN HANDLING FUEL NOZZLE ASSEMBLIES SINCE EVEN FINGERPRINTS ON THE ORIFICE MAY PRODUCE POOR SPRAY PATTERN. CLEAN, LINT FREE GLOVES SHOULD BE WORN AT ALL TIMES WHEN HANDLING PARTS.		
A. Fuel Nozzle Assembly		
(1) Check the nozzle assembly for burrs and similar defects. Threads and hexagon may be lightly stoned to remove nicks and burrs.		
B. Nozzle Sheath (Ref. Fig. 206)		
(1) Erosion, any loss of coating is acceptable provided any loose coating is removed by light buffing and 0.040 inch minimum dome thickness is retained .		
(2) Fretting wear, maximum permissible depth is 0.010 inch; deburr raised material.		
C. Manifold Adapter		
(1) Check the locating pin for security in the adapter and for burrs and similar defects. Check threads for damage.		
D. Transfer Tubes (Ref. Fig. 207)		
(1) Examine for general condition and check preformed packing grooves and lands for damage. Minor surface damage in the form of burrs and scratches, may be removed by blending.		
(2) Inspect for bent transfer tubes (1) as follows:		
(a) Put the transfer tube on flat surface and roll the transfer tube. If an elliptical motion is produced at any point along the tube, reject the tube.		
(3) Inspect condition of external anodic finish.		
(4) Examine the bore of each tube is free from blockage. Install the cap on the transfer tube (1) after inspection.		

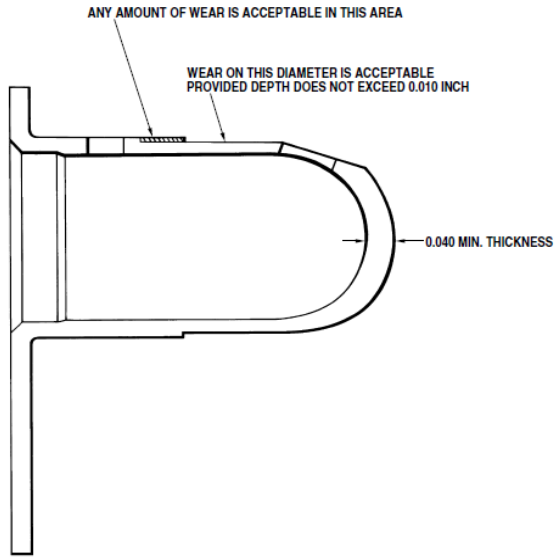

Nozzle Sheath Wear Limits
Figure 206

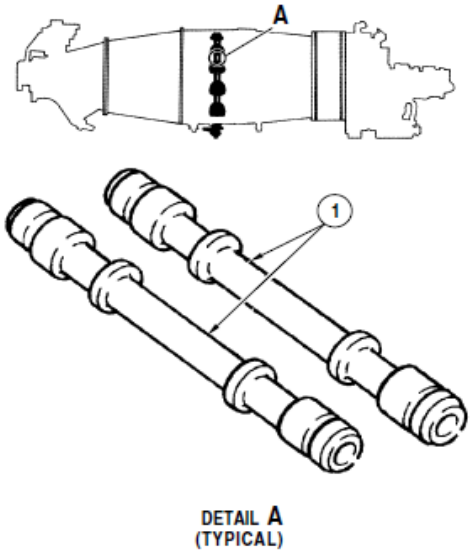

Fuel Manifold Transfer Tube
Figure 207

ACFT TYPE		200 HOUR INSPECTION REQUIREMENTS	MECH	INSP
ALL	76	EPA and Oil Drain Sump Cans: (If Equipped) Inspect can for leakage, condition, and security of installation. Completely drain can.		
ALL	77	EPA Can/Ejector Assembly: (If Equipped) Inspect assembly for leakage, condition, and security of installation. Completely drain can. Ensure that the alternate vent at the top of the ejector assembly is clean and free from debris.		
ALL	78	Engine System Drain Lines: Inspect the engine oil and fuel drain lines for proper routing of lines, deterioration of hoses, security of installation, and signs of leaks or damage.		

DOI - KODIAK 100 SERIES - 200 HOUR INSPECTION

ACFT TYPE		200 HOUR INSPECTION REQUIREMENTS	MECH	INSP
ALL	79	Drain Vents: Inspect vents on lower portion of cowlings for cleanliness and obstructions.		
ALL	80	Engine Fuel Lines: Inspect motive flow and fuel supply lines for chafing, deterioration, fuel leaks, and security of installation.		
ALL	81	Inspect the mounting lugs visually for cracks and other defects. Cracks are not permissible; minor surface damage may be repaired.		
ALL	82	Inspect the machined mounting faces for gouges, nicks, scores, scratches, and similar surface defects which can damage the gasket between the pump and accessory gearbox and/or prevent proper mating of the fuel control unit to the pump. Particular attention should be paid to the seal recess at the bypass port between the studs in mounting face for the fuel control unit.		
ALL	83	Inspect the bore of the inlet port for damage on the sealing surface.		
ALL	84	Check the studs for security and for damage to the threads.		
ALL	85	Inspect the seal seepage drain port and fuel outlet port adapter for damage to the threads.		
ALL	86	Check for leakage from seal drain port:		
		(a) Coupling drive oil leaks from fuel pump drain should not exceed 3 cc per hour. If limits are exceeded, replace plain seal on accessory gearbox pad. If leaks are still present and exceed limits, ship unit for overhaul.		
		(b) Fuel leaks should not exceed 20 cc per hour. If leakage exceeds limit, ship fuel pump for overhaul. **NOTE:** If limit is exceeded, inspect FCU driveshaft bearing area for fuel contamination.		
		(1) Examine mounting flange, housing and components of lever mechanism for cracks and other surface defects. Cracks are not permissible; minor defects may be repaired.		
		(2) Examine ports for damage to internal threads and, if evident, send unit for rectification at an overhaul facility.		
		(3) Examine elbow fittings for damage to threads.		
		(4) Examine external surfaces for corrosion and for general condition of anodic treatment.		
		(5) Traces of blue grease on the driveshaft bearing face and retaining plate are acceptable. Presence of grease, with a hard or jelly-like consistency, indicates that the area has not been contaminated by excess fuel or oil and the driveshaft bearing stays lubricated.		
		(6) Check that the drive shaft turns smoothly by spinning with light finger force. The driveshaft should stop turning when finger force is released.		
		NOTE: A free spinning driveshaft indicates that the bearing has been subjected to lubricant wash-out and this is cause for rejection. Send the unit for rectification to an approved overhaul facility.		
		(7) Check the drive couplings and FCU driveshaft for worn splines. Reject unit if any wear is found.		
		(8) Brinelling of the driveshaft bearing is cause for rejection. Send the unit for rectification to an approved overhaul facility.		

ACFT TYPE		200 HOUR INSPECTION REQUIREMENTS	MECH	INSP
ALL	87	Inspect the splines on the drive coupling for nicks, gouges and chips.		
ALL	88	Examine the external surfaces of the pump for corrosion and for the general condition of the anodic treatment.		
ALL	89	Check for signs of leakage from the joint between the pump cover and pump housing. If leakage is evident, return the pump for overhaul.		
ALL	90	Examine the inlet filter element for damage and/or breaks in the screen mesh.		
ALL	91	The discharge filter is disposable and should be subjected only to visual examination for defects if the life of the part has not expired.		
ALL	92	Check that flexible hoses are fitted to avoid interference with the operation of the reversing linkage mechanism.		

ACFT TYPE		200 HOUR INSPECTION REQUIREMENTS	MECH	INSP
ALL	93	Sundstrand Fuel Pump Coupling In-Situ Inspection - Remove the drain line and fitting from the fuel pump drain port (2, Fig. 202). **CAUTION:** IF A COTTON SWAB OR SIMILAR DEVICE IS USED FOR THIS INSPECTION, CARE MUST BE TAKEN TO MAKE SURE NO FOREIGN MATTER REMAINS IN THE DRAIN PORT OR ASSOCIATED FITTINGS AND LINES.		

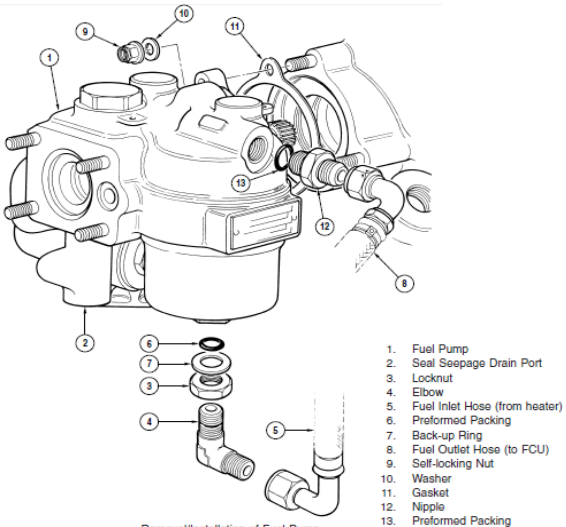

Removal/Installation of Fuel Pump
Figure 202

ACFT TYPE		200 HOUR INSPECTION REQUIREMENTS	MECH	INSP
ALL	94	Insert a cotton swab, or equivalent, 1.0 to 1.5 in. deep into the drain port of the fuel pump (Ref. Fig. 203).		
ALL	95	Angle the cotton swab (Ref. Fig. 203) and roll it inside the drain port to collect evidence of a possible reddish-brown deposit (iron oxide).		

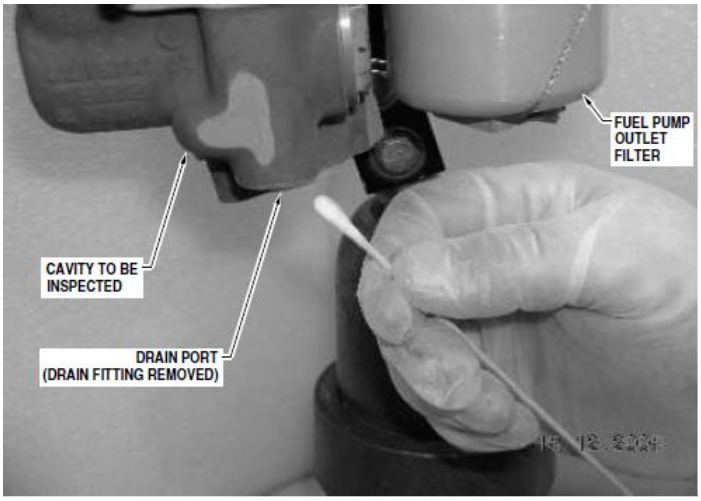

Fuel Pump In-situ Inspection
Figure 203

ACFT TYPE		200 HOUR INSPECTION REQUIREMENTS	MECH	INSP
ALL	96	If no reddish-brown (iron oxide) stain is evident, the fuel pump may remain in service. **CAUTION:** DO NOT REMOVE THE FUEL PUMP COUPLING. REMOVAL MAY CAUSE CHIPPING OF THE SPLINES AND/OR LOSS OF THE CIRCLIP RETENTION. THE CIRCLIP ALLOWS VERY LIMITED MOVEMENT OF THE PUMP COUPLING.		
ALL	97	If a reddish-brown (iron oxide) stain is evident:		
		Remove fuel pump.		
		(b) Examine the input coupling shaft area of the pump face (Ref. Fig. 201) for residue from fretting corrosion (iron oxide deposit). If none is present, the pump may remain in service.		

	MECH	INSP
(c) Evidence of corrosion residue indicates possible spline wear. Return the fuel pump to an approved overhaul facility.		
(d) Install a replacement fuel pump.		

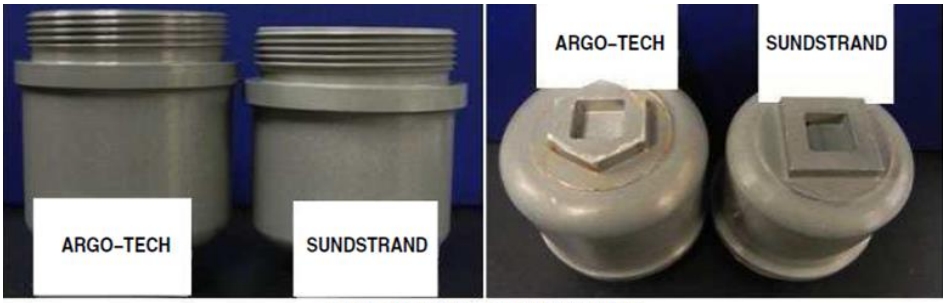

Removal/Installation of Fuel Pump Filters
Figure 201

ACFT TYPE		200 HOUR INSPECTION REQUIREMENTS	MECH	INSP
ALL	98	Fuel Manifold: Inspect for evidence of fuel leaks and security of installation.		
ALL	99	Flow Divider: Inspect for fuel leaks and security of installation.		
ALL	100	Firewall Fuel Shutoff Control: Perform an operational check as instructed below.		
TITLE:		Firewall Fuel Shutoff Control Operational Check Procedure		

		MECH	INSP
INSPECTION INSTRUCTIONS	1. Operate the control to check for freedom of movement and positive engagement of the shutoff valve at the firewall.		
	2. With the firewall shutoff valve closed, open the drain valve on the firewall mounted fuel filter. Verify proper operation of the shutoff valve by checking that only a small amount of fuel flows from the filter drain valve.		

ACFT TYPE		200 HOUR INSPECTION REQUIREMENTS	MECH	INSP
ALL	101	P3 Filter: Clean and inspect for general condition.		
ALL	102	Fuel Control Unit: Inspect for fuel leaks and security of installation.		
ALL	103	Fuel Control Unit: Inspect for bearing washout (indicated by leakage of a mixture of blue dyed grease and fuel) at the FCU vent.		
ALL	104	FCU Manual Override: Perform FCU Manual Override System static check.		
ALL	105	Fuel Flow Transducer: Inspect for fuel leaks, evidence of damage and security of installation.		
ALL	106	Inspect spark igniters as instructed below.		
		(1) Inspect the exterior cylindrical area of the firing end of the igniter shell for chafing wear. Wear is acceptable to a depth of 0.015 inch.		
		(2) Inspect the igniter shell and electrode for erosion (Ref. Fig. 204 and Table 202). If erosion equals or exceeds amounts shown, reject the spark igniter.		
		(3) Do a functional test on acceptable and replacement spark igniters.		

CAUTION:

SHOULD AN IGNITER PLUG BE DROPPED, INTERNAL DAMAGE, POSSIBLY NOT DETECTABLE BY TEST, CAN OCCUR. RECOMMENDATION IS TO REPLACE THE IGNITER PLUG.

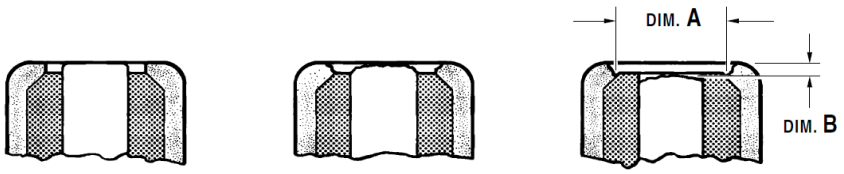

NEW IGNITER ACCEPTABLE WEAR WORN OUT

TABLE 202, Spark Igniter Erosion Limits

P&WC PART NO.	VENDOR NAME AND PART NO.	DIM. A (IN)	DIM. B (IN)
* 3014986	Champion: FHE-182	0.3437	0.0312
* 3024706	A.C.: 5611760	0.2750	0.1000
** 3027280	Champion: CH34055	0.3000	N/A
** 3031213	Bendix: 10-390667-1	0.3000	N/A

* Earlier parts supplied under ordering Part No. 3014981.

** Later parts supplied under ordering Part No. 3032096. Igniters eroded beyond limits should be replaced by latest part(s), if available.

ACFT TYPE		200 HOUR INSPECTION REQUIREMENTS	MECH	INSP
ALL	107	Engine Controls: Check for proper operation, freedom of movement and that full range of motion is attained. Check that component stops are reached prior to the cockpit control stops. Inspect for security of installation, corrosion, wear, evidence of damage, proper routing and any deterioration.		
ALL	108	Engine and Propeller Control Linkages and Attach Brackets: Inspect for wear, corrosion, freedom of movement, security of installation and general condition.		
ALL	109	Engine Control Rod Ends: Inspect for corrosion, freedom of movement, and radial play. Lubricate the rod ends with LPS-1. * Engine Control Rod Ends must also be lubricated following each external engine wash.		
ALL	110	Propeller Reversing Cam: Check for proper operation, clean and lubricate with Lubriplate 630AA.		
ALL	111	Engine Exhaust: Inspect ducts for cracks, distortion, evidence of damage, and security of installation.		
ALL	112	Oil Filter Element: Remove filter element and inspect for damage and debris. Clean filter.		
ALL	113	Oil Filler Cap and Dipstick: Inspect for proper condition and security of installation.		
ALL	114	Chip Detector Annunciation: Perform annunciation test (If Equipped).		
ALL	115	Oil Pressure Sensors: Inspect plumbing for leakage, condition and security of installation. Inspect the electrical connections for evidence of damage, condition and security of installation.		
ALL	116	Oil Temperature Sensor: Inspect for leakage, proper condition and security of installation. Inspect electrical connection for evidence of damage, condition and security of installation.		
ALL	117	Starter-Generator: Inspect terminal block, boots, and electrical connections for security of installation, cleanliness, signs of overheating or arcing, and other damage.		
ALL	118	Starter-Generator: Inspect the electrical cables for proper routing, condition and support. Inspect connector hardware for security of installation and condition.		
ALL	119	Autopilot Actuation System (If Equipped): Inspect bridle cables for chafing, fraying, general cleanliness, and proper routing. Inspect drive pulleys and guard pins for proper condition, abnormal wear, security of installation and signs of corrosion. Inspect electrical components for proper operation, condition, and security of installation.		
ALL	120	Autopilot Cutoff Relay (If Equipped): Inspect relay for security of installation, signs of electrical damage or other damage, and proper operation.		
ALL	121	Main Fuselage Wiring: Inspect for chafing, overheating, proper condition, and security of installation at electrical connections and support clamps.		
ALL	122	Pilot, Copilot, and Passenger Restraints: Inspect pilot and copilot inertia reels for proper operation. Inspect pilot, copilot and passenger seat belts and shoulder harnesses for condition, frayed edges, signs of damage, and proper operation.		
ALL	123	Pilot and Copilot Inertia Reels: Inspect for proper security of installation, proper routing, and security of release cable housing.		
ALL	124	Pilot, Copilot, and Passenger Seats: Inspect seat brackets, guides, and stops for security and condition. Inspect controls for security, condition and proper operation. Inspect the seat structure and seat cushions for proper condition and security. Service the seat position adjusting screws, bearings and locking mechanisms.		
ALL	125	Pilot and Copilot Seat Back Stop Mechanism: Inspect for loose or missing hardware and proper condition.		
ALL	126	Portable Fire Extinguishers: Inspect for proper pressure, condition, and security of installation. Check required service date.		
ALL	127	Stall Warning Horn and Stall Warning Horn Relay: Inspect the warning horn and relay for proper condition, security of installation, and signs of damage. Inspect horn grill cover for proper condition and security of installation. (Ground check only.)		
ALL	128	Squat Switch (If Equipped): Inspect squat switch for proper operation, condition, security, and signs of damage.		

DOI - KODIAK 100 SERIES - 200 HOUR INSPECTION

ACFT TYPE		200 HOUR INSPECTION REQUIREMENTS	MECH	INSP
ALL	129	Stall Warning Computer (If Equipped): Inspect for security of attachment, damage, and proper operation.		
ALL	130	Control Column: Inspect control column assembly forward and aft of the instrument panel for condition and security of installation. Operate the control wheel in all directions while inspecting all moving components to verify proper operation and freedom of movement. Inspect bearing and wear surfaces for proper condition. Replace as needed.		
ALL	131	Aileron Control Cables (Fuselage and Control Column Section): Inspect the cables for chafing, fraying, cleanliness, turnbuckle safetying, and proper routing. Inspect pulleys and cable guards for wear, corrosion, proper condition, and security of installation.		
ALL	132	Electric Rudder Trim and Indicator: Inspect the trim system for proper condition and security of installation. Operate the trim to verify proper operation, freedom of movement and full range of motion. Check that the trim system contacts the limit switches prior to hitting the hard stops on the bungee collar. Verify the indicator functions properly.		
ALL	133	Flap Control System: Inspect the flap control lever for proper condition, security of installation, travel, and signs of damage.		
ALL	134	Flap Gearbox/Controller: Inspect the gearbox controller unit for security of installation and signs of exterior damage. Inspect electrical connections for security and condition.		
ALL	135	Instrument Panel Mounted Avionics Units: Clean as outlined in Section 8 of the POH/AFM.		
ALL	136	Radio and electronic equipment - for improper installation and insecure mounting.		
ALL	137	Wiring and conduits - for improper routing, insecure mounting, and obvious defects.		
ALL	138	Bonding and shielding - for improper installation and pooor condition.		
ALL	139	Antenna including trailing antenna - for poor condition, insecure mounting, and improper operation.		
ALL	140	Pitot and Static Drain Valves: Inspect for proper operation, security and signs of damage. Visually inspect for leaks and presence of water in valve. Drain any accumulated water.		
ALL	141	Oxygen Control System: Inspect the pressure regulator and its control panel for proper condition security of installation and operation. Check oxygen flow from each outlet.		
ALL	142	Cargo Door Entrance Steps: Inspect for proper condition and security of installation. Lubricate the cargo door step hinge points with LPS 1.		
ALL	143	Windshield and Windows: Inspect for proper condition, security of installation and debond areas. Inspect pilot’s storm window for proper operation and sealing.		
ALL	144	ELT: Inspect for security of installation, condition of electrical components and position of the function switch. Inspect the ELT structure for corrosion. Check cumulative time and useful life of battery in accordance with 14 CFR Part 91.207.		
ALL	145	Elevator Trim Tab Cables (Fuselage): Inspect the cables in the fuselage for chafing, fraying, cleanliness, proper routing, and safetying of turnbuckles. Inspect pulleys and cable guards for wear, corrosion, proper condition, and security of installation.		
ALL	146	Oxygen System: Inspect components for proper condition and security of installation. Inspect the shutoff valve and regulator for proper condition, security of installation, and operation.		
ALL	147	Rudder: Inspect the rudder hinges for cracks, proper condition, and security of installation. Inspect the hinge bolts, hinge bearings, hinge attach fittings, and bonding jumpers for evidence of damage or unusual wear. Inspect for failed fasteners and proper safetying of nuts with cotter pins. Inspect the rudder skins for cracks and loose rivets. Inspect balance weight for security and condition.		
ALL	148	Rudder Sector: Inspect the sector stop bolts for corrosion, signs of damage, and security of installation. Inspect the nuts attached to the sector for proper safetying with cotter pins.		
ALL	149	Aft Elevator Sector: Inspect aft sector, bearings, pushrod, stop bolts, and brackets for corrosion, failed fasteners, evidence of damage, and security of installation. Inspect the pushrod bolts for proper safetying of nuts with cotter pins. Lubricate the lower rod end connection with LPS 1. Inspect for presence of the elevator down stop rubber bumper on the elevator bellcrank.		
ALL	150	Elevator: Inspect elevator skins for cracks, condition, and loose rivets; elevator hinges for condition, security, and cracks; and hinge bolts, hinge bearings, torque tube horn, attach fittings, and bonding jumpers for evidence of damage or unusual wear, failed fasteners, and security of installation. Inspect elevator hinge bolts for proper safetying of nut with cotter pins. Inspect supporting structure for signs of damage. Inspect balance weights for security and condition.		
ALL	151	Elevator Control System: Check pushrod joints for security of installation. Check fasteners for proper security.		

DOI - KODIAK 100 SERIES - 200 HOUR INSPECTION

ACFT TYPE		200 HOUR INSPECTION REQUIREMENTS	MECH	INSP
ALL	152	Elevator Trim Tabs: Inspect the trim tab skins for cracks, loose rivets, and security of installation. Inspect the trim tab hinge for security, cracks, and corrosion. Inspect the hinge pin for properly centered installation. Inspect the pushrods for security and any signs of damage. Inspect the pushrod bolts for proper condition and safetying of nuts with cotter pins. Lubricate the trim tab piano hinges with LPS 1.		
ALL	153	Elevator Trim Tab Actuators: Inspect for proper condition and security of installation. Inspect attaching hardware for excessive wear and security. Perform elevator trim tab free-play inspection (maximum play allowed is 0.080”).		
ALL	154	Vertical and Horizontal Stabilizers: Inspect the structures and their attach points for security and condition. Inspect vortex generators for condition and security.		
ALL	155	Static Discharge Wicks and Control Surface Bonding Straps: Inspect for proper condition and security of installation. Perform High Resistance Check.		
ALL	156	Wing Electrical Wiring: Inspect for chafing, overheating, proper condition, and security of installation at electrical connections and support clamps.		
ALL	157	Flight Control Systems Rod End Connections: Check for proper condition and freedom of movement. Lubricate with LPS 1.		
ALL	158	Ailerons: Inspect aileron hinges for proper condition, cracks, and security of installation. Inspect the hinge bolts, hinge bearings, hinge attach fittings, and bonding jumpers for evidence of damage, unusual wear, failed fasteners, and security of installation. Inspect the aileron skins for cracks and loose rivets. Inspect balance weights for security and condition.		
ALL	159	Aileron Wing Cables: Inspect wing cables for chafing, fraying, cleanliness, turnbuckle safetying, and proper routing. Inspect pulleys and guards for wear, corrosion, proper condition and security of installation. Reposition pulleys in relation to cable to allow even wear of the pulley.		
ALL	160	Aileron Bellcranks: Inspect bellcranks for security of installation, corrosion, cleanliness, and signs of damage to cable guards. Inspect cable attach points and attaching hardware for proper wear, condition and security of installation.		
ALL	161	Aileron Control (Wings): Inspect pushrod joints for security of installation and proper installation of fasteners.		
ALL	162	Aileron Trim Tab: Inspect the trim tab skin for cracks, loose rivets, and security of installation; trim tab hinges for security of installation and signs of damage; hinge pin for proper installation in hinge pin retainer; horn and pushrod for signs of damage and security of installation; pushrod bolts for proper condition and proper safetying of nuts with cotter pins.		
ALL	163	Flap Tracks: Inspect the flap tracks and rollers for flat spots, excessive wear, deformation, cracks, corrosion, and worn bearings. Lubricate the flap tracks using LPS 1.		
ALL	164	Flap Operating Mechanisms: Inspect cabin flexible drive shafts for proper condition, routing and security of installation.		
ALL	165	Flap Actuator Assemblies and Flap Gap Seals (Wing): Inspect for proper condition and security of installation of the wing flexible shafts. Inspect the flap actuator support structures for proper condition and security of installation. Inspect the fuselage gap seal assemblies for security and condition.		
ALL	166	Wing Fuel Tanks: Inspect for fuel stains or any evidence of fuel leaks. Check drain/vent holes in the lower wing skins just outboard of the wing tanks for signs of leakage and for cleanliness.		
ALL	167	Fuel Tank Filler Caps and Flapper Valves: Inspect for broken components or other damage. Check filler cap locking position and security of installation.		
ALL	168	Fuel Drain Valves: Check for proper operation and inspect for corrosion, leakage and proper sealing action.		
ALL	169	Fuel Selector Valves and Linkages: In the wing root area, inspect shutoff valves, controls and linkages for security, condition and signs of damage.		
ALL	170	Fuel Vent Lines (Wings): Inspect for signs of damage, obstructions, and cleanliness.		
ALL	171	Fuel Lines (Cabin): Check lines for security of installation, proper condition and evidence of leakage.		
ALL	172	Magnetometers (Wings): Check units for security of installation, proper condition, and signs of damage. Check electrical connections for proper installation and proper routing of wires.		
ALL	173	Pitot/Static Tubes: Visually inspect tubes and static ports for obstructions. Inspect pitot masts for damage, security, and general condition.		
ALL	174	Stall Warning Lift Sensor (Vane-type or Lift Transducer, as equipped): Inspect for proper condition and security of installation.		
ALL	175	Wings: Inspect for loose rivets and fasteners, corrosion, cracks, wrinkles, and dents. If so equipped, inspect vortex generators for condition and security. Inspect attach points for proper security and condition.		
ALL	176	Wing Strut: Inspect for security, condition, and signs of damage.		

DOI - KODIAK 100 SERIES - 200 HOUR INSPECTION

ACFT TYPE		200 HOUR INSPECTION REQUIREMENTS	MECH	INSP
ALL	177	Wing Access Panels: Inspect for signs of damage and security of installation.		
ALL	178	Wing Spar Attach Fittings: Inspect bolts for proper security and installation.		
ALL	179	Wing Strut Fittings: Inspect attach bolts for security and condition.		
ALL	180	Main Landing Gear System: Inspect for general condition and security. Check that there is no freeplay between the landing gear legs and trunnion. Check for security of nuts and cotter pin placement on trunnion mounting studs. Check for proper condition and any signs of damage at trunnion and gear legs. Lubricate the trunnion assemblies with Aeroshell Grease 22. See appropriate manual for further details. ****Caution** DO NOT** pump more than three pumps of grease in the end caps. Inserting excessive amounts of grease into the end caps will pressurize the end caps which can damage the surrounding structure.		
ALL	181	Nose Gear Shock Strut: Inspect for evidence of leakage and proper extension. Service as necessary. Inspect strut barrel for pitting and corrosion. Inspect for general condition and cleanliness. Wipe the nose strut chrome tube with a cloth lightly damp with MIL-H-5606 hydraulic fluid.		
ALL	182	Brake Assemblies: Check brake lining wear, check disk for proper condition and any warping. Inspect for signs of leakage as instructed below.		

TITLE:	Brake Inspection	MECH	INSP
INSPECTION INSTRUCTIONS	1. Disassemble the brake as instructed in applicable Kodiak Manual.		
	2. Inspect the brake linings for deterioration. Ensure the wear is within the limits.		
	3. Replace the brake linings if worn to 0.100 inch or less.		
	4. Inspect the brake cylinder bores for signs of scoring and deterioration. Replace the cylinder assembly if the cylinders are scored.		
	5. Replace all packings, back-up rings, and O-rings when reassembling the brakes.		
	6. Reassemble the brake as instructed in applicable Kodiak Manual.		

ACFT TYPE		200 HOUR INSPECTION REQUIREMENTS	MECH	INSP
ALL	183	Nose Landing Gear Tire and Wheel: Inspect for proper inflation pressure, wear and condition of tire. Inspect wheel for security of installation and condition.		
ALL	184	Main Landing Gear Tires and Wheels: Inspect for proper inflation pressure, wear, and condition of tire. Inspect wheel for security of installation and condition.		
ALL	185	Nose Landing Gear Wheel Bearings: Inspect for proper condition and repack. Lubricate the bearings with Mobil SHC 100 as instructed below.		

TITLE:	Brake Disk Inspection and Servicing	MECH	INSP
INSPECTION INSTRUCTIONS	**NOTE:** Under normal operations the brake disc should provide years of trouble-free service, however, operations in and out of unimproved strips, standing water, heavy industrial pollution, or infrequent use of the aircraft will require more frequent inspection of the brake discs in an effort to prolong the life of the brake linings.		
	A. Brake Disc Inspection: Check the disc for warping, disc faces for unusual wear beyond the minimum thickness of 0.537 inch. Check for grooves, deep scratches, excessive pitting corrosion, and coning of the brake disc. Coning in excess of 0.015 in either direction is cause for replacement. Isolated groves are considered allowable up to 0.030 inch deep. Heat checking is considered to be just superficial surface cracks and not hinder brake performance. However, break replacement is necessary if any single crack is longer than 0.50 inch, or deeper than 0.25 inch. Replace the brake disc if more than three cracks are discovered on a disc. Replace the brake disc if more than one crack is found in a 90 degree quadrant of the disc.		
	B. Brake Servicing: Rust will occur on the disc surfaces to a certain degree, and this is allowable. If powdery rust appears on the disk, normal taxiing and braking operation will remove this from the surface. If the rust is allowed to progress beyond the point where braking operation will remove it, it may be necessary to remove and clean both surfaces. Wire brushing by hand, followed by an application of 220 grit sandpaper can restore the brake disk surfaces to proper condition for use.		

DOI - KODIAK 100 SERIES - 200 HOUR INSPECTION

ACFT TYPE		200 HOUR INSPECTION REQUIREMENTS	MECH	INSP
ALL	186	Main Landing Gear Wheel Bearings: Inspect for proper condition and repack. Lubricate the bearings with Mobil SHC 100 as instructed below.		
TITLE:		Wheel Bearings		

		MECH	INSP
INSPECTION INSTRUCTIONS	A. Wheel Bearings Removal:		
	1. Remove the snap rings, grease retainer seal, and the tapered roller bearing from the inboard wheel half.		
	2. Remove the snap ring, grease retainer seal, and the tapered roller bearing from the outboard wheel half.		
	NOTE: The bearing cups are press-fit into the wheel halves and should not be removed unless it is necessary to replace them.		
	3. For replacement of the bearing cup, heat the wheel half in boiling water for 15 minutes.		
	4. Press the bearing cup out with an arbor press, and press in a bearing cup while the wheel half is still hot.		
	B. Wheel Bearings Installation:		
	1. Before installation, grease bearings in accordance with the Cleveland Brakes Component Maintenance Manual.		
	2. Replace the tapered roller bearing, grease retainer seal, and the snap ring onto the outboard wheel half.		
	3. Replace the tapered roller bearing, grease retainer seal, and the snap ring onto the inboard wheel half.		

ACFT TYPE		200 HOUR INSPECTION REQUIREMENTS	MECH	INSP
ALL	187	Shimmy Damper: Inspect for proper condition, security, and signs of leakage (if applicable). Lubricate the shimmy damper pivot points with LPS 1.		
ALL	188	Steering Bungee: Check for the security of threaded rod end into the bungee housing. Check for the security of the band clamp securing the steering bungee and the bungee adjuster. Lubricate the rod end with LPS 1.		
ALL	189	Perform a transient voltage suppressor inspection (if GFC 700 equipped) as instructed below.		
TITLE:		Transient Voltage Suppressor Inspection		

		MECH	INSP
INSPECTION INSTRUCTIONS	**WARNING:** Damage can occur to the GRS or GMU if insulation resistance voltage is applied to the GRS or GMU.		
	A. Place the master switch in the OFF position.		
	B. Disconnect the following connectors from the associated equipment.		
	1. 1P771 from GRS77 #1		
	2. 2P771 from GRS77 #2		
	3. P501 from RH wing root		
	4. P601 from LH wing root		
	5. 1P441 from GMU44 #1		
	6. 2P441 from GMU44 #2		
	C. Conduct insulation resistance tests.		
	1. Configure the insulation tester for a 50 volt test and measure the insulation resistance between the following pins. Measured insulation resistance must be greater than 40 Meg Ohms.		
	a. GRS77 #1, connector 1P771 pins 9 and 40		
	b. GRS77 #2, connector 2P771 pins 9 and 40		

	MECH	INSP
c. GMU44 #1, connector 1P441 pins 9 and 6		
d. GMU44 #2, connector 2P441 pins 9 and 6		
2. Configure the insulation tester for a 100 volt test and measure the insulation resistance between the following pins. Measured insulation resistance must be less than 0.200 Meg Ohms.		
a. GRS77 #1, connector 1P771 pins 9 and 40		
b. GRS77 #2, connector 2P771 pins 9 and 40		
c. GMU44 #1, connector 1P441 pins 9 and 6		
d. GMU44 #2, connector 2P441 pins 9 and 6		
D. Replace any TVS units that fail either resistance test. See appropriate Kodiak Manual.		
E. After all TVS devices satisfy the inspection requirements, reconnect the following connectors to the associated equipment.		
1. 1P771 to GRS77 #1		
2. 2P771 to GRS77 #2		
3. P501 to RH wing root		
4. P601 to LH wing root		
5. 1P441 to GMU44 #1		
6. 2P441 to GMU44 #2		

ACFT TYPE		200 HOUR INSPECTION REQUIREMENTS	MECH	INSP
ALL	190	Perform a lightening protection resistor inspection (if GFC 700 equipped) as instructed below.		
TITLE:		Lightening Protection Resistor Inspection		

		MECH	INSP
INSPECTION INSTRUCTIONS	A. Place the Master switch in the OFF position		
	B. Disconnect the following connectors from the associated equipment		
	1. 1P771 from GRS 77 #1		
	2. P601 from J601		
	3. 2P771 from GRS 77 #2		
	4. P501 from J501		
	5. 1P603 from GIA #1		
	6. 2P603 from GIA #2		
	7. 4P801 from Pitch Trim Servo		
	8. 2P801 from Roll Servo		
	9. 1P441 from GMU #1		
	10. 2P441 from GMU #2		
	C. Conduct resistance tests.		

	MECH	INSP
NOTE: Subtract out the resistance of the test leads.		
1. Measure resistance between GRS #1 connector 1P771 pin 10 and connector P601 pin M. Resistance should be between 2.2 ohms and 3.4 ohms.		
2. Measure resistance between GRS #2 connector 2P771 pin 10 and P501 pin D (SN 100-0120 and up) or pin 4 (SN 100-0001 - SN 100-0119). Resistance should be between 2.2 ohms and 3.4 ohms.		
3. Measure resistance between connector 1P603 pin 4 and connector P601 pin U. Resistance should be between 3.2 ohms and 4.5 ohms.		
4. Measure resistance between connector 1P603 pin 6 and connector P601 pin Y. Resistance should be between 3.2 ohms and 4.5 ohms.		
5. Measure resistance between connector 2P603 pin 4 and connector P601 pin GG. Resistance should be between 3.2 ohms and 4.5 ohms.		
6. Measure resistance between connector 2P603 pin 6 and connector P601 pin HH. Resistance should be between 3.2 ohms and 4.5 ohms.		
7. Measure resistance between connector 4P801 pin J and connector P601 pin U. Resistance should be between 3.4 ohms and 4.7 ohms.		
8. Measure resistance between connector 4P801 pin T and connector P601 pin Y. Resistance should be between 3.4 ohms and 4.7 ohms.		
9. Measure resistance between connector 4P801 pin S and connector P601 pin GG. Resistance should be between 3.4 ohms and 4.7 ohms.		
10. Measure resistance between connector 4P801 pin E and connector P601 pin HH. Resistance should be between 3.4 ohms and 4.7 ohms.		
11. Measure resistance between connector 2P801 pin J and connector J601 pin U. Resistance should be between 3.1 ohms and 4.4 ohms.		
12. Measure resistance between connector 2P801 pin T and connector J601 pin Y. Resistance should be between 3.1 ohms and 4.4 ohms.		
13. Measure resistance between connector 2P801 pin S and connector J601 pin GG. Resistance should be between 3.1 ohms and 4.4 ohms.		
14. Measure resistance between connector 2P801 pin E and connector J601 pin HH. Resistance should be between 3.1 ohms and 4.4 ohms.		
15. Measure resistance between connector 1P441 pin 4 and connector J601 pin L. Resistance should be between 2.2 ohms and 3.4 ohms.		
16. Measure resistance between connector 1P441 pin 2 and connector J601 pin S. Resistance should be between 2.2 ohms and 3.4 ohms.		
17. Measure resistance between connector 1P441 pin 8 and connector J601 pin M. Resistance should be between 2.2 ohms and 3.4 ohms.		
18. Measure resistance between connector 2P441 pin 4 and connector J501 pin L. Resistance should be between 2.2 ohms and 3.4 ohms.		
19. Measure resistance between connector 2P441 pin 2 and connector J501 pin S. Resistance should be between 2.2 ohms and 3.4 ohms.		
20. Measure resistance between connector 2P441 pin 8 and connector J501 pin D (SN 100-0120 and up) or pin 4 (SN 100-0001 - SN 100-0119). Resistance should be between 2.2 ohms and 3.4 ohms.		

ACFT TYPE		**200 HOUR INSPECTION REQUIREMENTS**	MECH	INSP
ALL	191	Inspect each installed miscellaneous item that is not otherwise covered by this listing for improper installation and improper operation.		

ACFT TYPE		**200 HOUR INSPECTION REQUIREMENTS TKS ICE PROTECTION SYSTEM INSPECTION**	MECH	INSP
ALL	192	Porous Panels and Windshield Nozzles - Inspect for proper condition and security.		
ALL	193	Porous Panels and Windshield Nozzles - Operate system to check for even flow from all panels. Inspect for leaks from sealed areas.		
ALL	194	Propeller Slinger - Inspect for proper condition and security of installation. Check fluid lines for leaks with the system operating. Check for proper routing/aim of nozzles. Ensure the fluid is discharging into ring from nozzle fitted at front of engine.		
ALL	195	Propeller Nozzle (Aircraft to Propeller Slinger) - Inspect that nozzle is positioned to direct a stream of fluid into propeller slinger with system operating on HIGH.		
ALL	196	Ice Inspection Lights - Inspect lights and electrical connections for proper operation and security of installation. Ensure that the orientation of the ice lights provide adequate illumination of the wings' leading edge.		

ACFT TYPE		200 HOUR INSPECTION REQUIREMENTS TKS ICE PROTECTION SYSTEM INSPECTION CONTINUED	MECH	INSP
ALL	197	Stall Warning Lift Transducer Heat Check - Perform inspection as instructed below.		

TITLE:	Lift Transducer Functional Heat Test

		MECH	INSP
INSPECTION INSTRUCTIONS	**CAUTION:** On airplanes equipped with a heated lift transducer, the lift transducer and the area around the lift transducer may be hot enough to instantly burn skin, burn or melt clothing and or objects touching it. Do not touch the lift transducer or surrounding area until it has cooled.		
	CAUTION: The heaters will quickly overheat in “Air” mode. Only allow five seconds MAX to perform the test.		
	1. Ensure left pitot cover is removed.		
	2. Apply ground power to the airplane.		
	3. Move the MASTER switch to ON.		
	4. Move the left Pitot Heat switch to ON.		
	5. Allow 5 minutes for heating element to reach equilibrium.		
	6. Use an infrared thermometer to verify the lift transducer vane and mounting plate are hot and mounting plate measures > 100º.		
	7. Set the aircraft in “Air” mode.		
	NOTE: Set the aircraft in “Air” mode by removing the floorboards and depressing the Weight-On-Wheels plunger.		
	8. Allow 5 seconds only for heating element to show temperature increase.		
	CAUTION: The heaters will quickly overheat in “Air” mode. Only allow five seconds MAX to perform the test.		
	9. Use an infrared thermometer to verify the lift transducer vane and mounting plate increase in temperature.		
	10. Remove aircraft from “Air” mode.		
	11. Move the left Pitot Heat switch to OFF.		
	12. Move the MASTER switch to OFF.		
	13. Remove ground power to the airplane.		
	14. Replace left pitot cover.		

ACFT TYPE		SUPPLEMENTAL 200 HOUR INSPECTION REQUIREMENTS EXTERNAL CARGO COMPARTMENT INSPECTION	MECH	INSP
ALL	198	EPA and Oil Drain Sump Cans: (If Equipped) Inspect can for leakage, condition, and security of installation. Completely drain can.		
ALL	199	External Cargo Compartment Fuel Drain Lines - Check drain lines and valves for evidence of leakage and proper operation.		

ACFT TYPE		SUPPLEMENTAL 200 HOUR INSPECTION REQUIREMENTS GARMIN GWX 68 WEATHER RADAR INSPECTION	MECH	INSP
ALL	200	Radome and Radome/Wing Attachment (If Equipped): Inspect for security of installation and proper condition. Ensure that there are no cracks in the dome, mount, or reinforcement.		
ALL	201	Wing Skin at attach Point (If Equipped): Inspect for security of installation and proper condition. Ensure that the UHMW tape is installed between the mount/wing skin and reinforcement/wing skin.		

ACFT TYPE		200 HOUR INSPECTION REQUIREMENTS	MECH	INSP
ALL	202	Conduct aircraft lubrication as specified in table below.		

DOI - KODIAK 100 SERIES - 200 HOUR INSPECTION

Interval	Item	Location	Lubricant
200 hr	Control Column Track Assembly	Control Column	LPS 3® Rust Inhibitor
200 hr	Landing Gear Wheel Bearings	Nose and Main Gear	Mobil SHC 100
200 hr	Seat Rails (Crew Seats Only)	Cockpit	LPS 1® Greaseless Lubricant

ACFT TYPE		200 HOUR INSPECTION REQUIREMENTS	MECH	INSP
ALL	202	Compressor Wash: Inspect wash ring for condition and security of installation. Perform a compressor wash.		
TITLE:		Turbine Blade Wash Procedures		

		MECH	INSP
INSPECTION INSTRUCTIONS	**NOTE:** Adhere to the following starter limitations for motoring the engine.		

Starter Options	Time ON	Time OFF
Lo/Motor	30 seconds	60 seconds
Lo/Motor	30 seconds	60 seconds
Lo/Motor	30 seconds	30 minutes

	MECH	INSP
NOTE: A minimum cool-down period of 40 minutes is recommended after engine running before injecting rinse fluid.		
NOTE: Compressor turbine blade washing is to be accomplished using potable water only at an ambient temperature of above 36°F. A potable water/methanol solution may be used with ambient temperatures below 36°F. See the P&W Maintenance Manual for appropriate solution strengths with varying ambient temperatures.		
1. Remove upper and lower forward cowlings.		
2. Place a suitable pan beneath the engine to recover wash solution.		
3. Remove one of the two igniter plugs.		
4. Install spray tube P/N PWC32271 in the igniter plug boss and tighten spray tube finger tight. Make sure the arrow on the tab of the spray tube is directed toward the propeller reduction gearbox and is parallel with the engine centerline.		
CAUTION: The cleaning solution supply hose should be supported in order to prevent damage to the spray tube.		
5. Connect a hose from a suitable cleaning rig to the spray adapter. The water/solution mixture should be delivered to the engine at 40 psi.		
6. Verify the engine ignition switch and engine bleed air is in the OFF position.		
7. Begin motoring the engine with the starter for 30 seconds; when the NG reaches 5%, introduce the wash solution to the engine.		
NOTE: Approximately ½ gallon of rinse solution will be consumed through the compressor turbine during a 30-second cycle.		
CAUTION: When using a water/methanol solution, perform an additional 30 seconds of dry motoring after each washing cycle to purge the engine of the volatile methanol fumes. Make sure recommended starter cooling periods of 40 minutes is observed.		
8. Repeat the washing cycle as required to remove contaminants from the turbine blades.		
9. Remove the spray tube assembly and reinstall the igniter plug.		
10. Perform two consecutive dry motoring runs while making sure the starter motoring limitations are not exceeded.		
11. Reinstall all engine cowlings.		

DOI - KODIAK 100 SERIES - 200 HOUR INSPECTIONS

ZONE	ACFT TYPE		SUPPLEMENTAL 200 HOUR INSPECTION REQUIREMENTS	MECH	INSP
ARCTIC	ALL	203	Floats - Inspect as required by OEM ICAs.		
ARCTIC	ALL	204	Skis - Inspect as required by OEM ICAs.		
ARCTIC	ALL	205	De-ice/Anti-ice System - Inspect as required by OEM ICAs.		
ARCTIC		206			
ARCTIC		207			
ARCTIC		208			
ARCTIC		209			
ARCTIC		210			
ARCTIC		211			
ARCTIC		212			
ARCTIC		213			
ARCTIC		214			
ARCTIC		215			
ARCTIC		216			
TEMPERATE	ALL	217	Floats - Inspect as required by OEM ICAs.		
TEMPERATE	ALL	218	Skis - Inspect as required by OEM ICAs.		
TEMPERATE	ALL	219	De-ice/Anti-ice System - Inspect as required by OEM ICAs.		
TEMPERATE		220			
TEMPERATE		221			
TEMPERATE		222			
TEMPERATE		223			
TEMPERATE		224			
TEMPERATE		225			
TEMPERATE		226			
TEMPERATE		227			
TEMPERATE		228			
TEMPERATE		229			
TEMPERATE		230			
	ALL	231	All panels opened for the inspection are closed and secure.		
	ALL	232	Run aircraft engine and leak check.		

DOI - KODIAK 100 SERIES - 200 HOUR INSPECTIONS

NOTES:

ASSURE PROPER MAINTENANCE RECORD ENTRIES HAVE BEEN MADE IAW 14 CFR 43.9

THE AIRCRAFT RECORDS CONSIST OF THE FOLLOWING;

1. AIRCRAFT, ENGINE & PROPELLER HARD LOGS.
2. ALL FORM 337'S, MAJOR REPAIR & ALTERATION.
3. COMPLIANCE LIST OF ALL PERTINENT AIRWORTHINESS DIRECTIVES.
4. MAINTENANCE SCHEDULE- LIST OF REQUIRED SPECIAL INSPECTIONS, COMPONENT OVERHAUL & TIME-LIFE LIMITS.
5. CURRENT & HISTORICAL WEIGHT & BALANCE STATUS & EQUIPMENT LIST
7. MINIMUM EQUIPMENT LIST AS REQUIRED.
8. SPECIAL FLIGHT AUTHORIZATIONS AND/OR SUPPLEMENTS

UNITED STATES DEPARTMENT OF THE INTERIOR

KODIAK 100 SERIES

300 HOUR SCHEDULED MAINTENANCE CHECKS

THE INSPECTION WORK SHEETS / PACKAGES IN THIS DOCUMENT ARE FOR THE 'UNITED STATES DEPARTMENT OF THE INTERIOR' AIRCRAFT ONLY.

Inspection Sheet - Block Explanation

Example

ACFT TYPE		EXAMPLE INSPECTION REQUIREMENTS	MECH	INSP
ALL	1	PY and P3 Line Heater Check: Perform an operational check of PY and P3 heaters.		
ALL	2	Conduct engine run-up checks as described below.		
ALL	3	EPA and Oil Drain Sump Cans: (If Equipped) Inspect can for leakage, condition, and security of installation. Completely drain can.	N/A	
A	**B**	**C**	**D**	**E**

Block A All - All Kodiak 100 Series aircraft.

Block B Each inspection and task is given a line item number in the 2nd column.

Block C Describes inspection tasks.

Block D Mechanic sign-off block.
N/A (Not Applicable) - should be used if the inspection cannot or should not be carried out due to (but not limited to) -

1. Serial number range.
2. Unit or option not installed on aircraft.
3. Previously complied with.
4. Climate zone applicability.

A note beside the N/A to indicate the reason for it is recommended.

Block E
The (white) INSP block should be initialed by an inspector who witnessed the task carried out by the mechanic and completed a final inspection and/or functional check in accordance with the line item requirements and relevant technical publications. The inspector shall not initial the INSP block until after the mechanic has initialed the MECH block. In a block that requires a Maintenance Inspector, he shall initial the white INSP block whenever N/A has been entered in the MECH block.

Climate Zone Supplemental Inspections and Servicing

Before commencing inspection and servicing, it must be confirmed which climate zone the subject aircraft is operated in. If the aircraft is above the 49th parallel it is in the Arctic Zone. If the aircraft is below the 49th parallel it is in the Temperate zone. The extra line items listed for the appropriate climate zone shall be added to the servicing, the not applicable climate zone line items shall be noted as N/A in the sign-off block.

Inspections: To be completed in accordance with this manual.

Repairs: To be completed in accordance with the appropriate Kodiak Maintenance Manual.

Acronyms in use

SID - Supplemental Inspection Document

CPCP - Corrosion Prevention and Control Program

NDI - Non Destructive Inspection

ICA - Inspection for Continued Airworthiness

STC - Supplemental Type Certificate

PSE - Principle Structural Element

N/A - Not Applicable (see MECH Block D above)

OEM - Original Equipment Manufacturer

IAW - In Accordance With

DOI - KODIAK 100 SERIES - 300 HOUR INSPECTION

'N' NUMBER:_____ MODEL: _____ AIRCRAFT S/N:_____

TACH HOURS:_____ AIRCRAFT TOTAL TIME:_____ ENG. SMOH:_____ PROP SMOH:_____

ACFT TYPE		300 HOUR INSPECTION REQUIREMENTS	MECH	INSP
ALL	1	Remove cowling, inspection plates, and all fairings as necessary to perform the inspections called for on this form. Thoroughly clean the aircraft and engine.		

TITLE:	Window and windshield Cleaning Procedures	MECH	INSP
INSPECTION INSTRUCTIONS	**CAUTION:** Windows and windshields are easily damaged if handled improperly.		
	1. Position the aircraft inside a hangar or another suitable location to allow the aircraft surface to remain cool and out of direct sunlight.		
	2. Flood the window with clean water and feel by hand (jewelry removed) for potentially abrasive materials on the window surface.		
	3. Remove any abrasive matter from window surface by hand.		
	4. Wash the window surface with mild soap or detergent mixed with water. A clean cotton cloth may be used to transfer the soapy solution to the window surface but use extreme care to prevent scratching of the window surface.		
	5. If the contaminants on the surface of the window cannot be removed by the solution of mild soap and water, Type II Aliphatic Naphtha may be used as a cleaning agent. Apply the Type II Aliphatic Naphtha with a soft clean cotton cloth, and frequently refold the cloth to avoid scratching the windshield with any abrasive particles.		
	6. Rinse the window surface thoroughly with clean water and dry with a clean cotton cloth.		
	7. Hard polishing wax may be applied to the acrylic window surfaces using a clean soft cotton cloth. The polishing wax will mask most shallow scratches on the window surface.		

TITLE:	Aluminum Surface Cleaning Procedures	MECH	INSP
INSPECTION INSTRUCTIONS	Aluminum surfaces do not require extensive maintenance, but should not be neglected. The aircraft should be washed with clean water in order to remove any collected dirt. Non-alkaline grease solvents may be used to aide in the removal of oil and grease. There are various commercial grade cleaners available for aluminum surfaces.		

TITLE:	External Painted Surface Cleaning Procedures	MECH	INSP
INSPECTION INSTRUCTIONS	A. The painted surfaces on the aircraft can normally be kept bright by washing with a solution of soap and water, followed by a water-rinsing and then dried off with a clean dry cloth or chamois. Abrasive soaps or detergents should never be used due to their tendency to cause corrosion. Stubborn oil or grease spots can be removed with a cloth moistened with Stoddard solvent. Follow any cleaning procedure with a thorough rinse of the aircraft.		
	CAUTION: If equipped with the TKS Ice Protection System, don't polish the surface of the porous panels. Polish on the porous panels impairs the wetting qualities of the TKS and may degrade ice protection efficiency. Polishing may also block pores in the panels. See the TKS Ice Protection System Instructions for Continued Airworthiness.		
	B. To seal any minor scratches or chips and to protect the aircraft skins against corrosion, the aircraft should be waxed on a regular basis. A quality grade automotive wax containing a carnauba base should be used, and should be applied in accordance with the manufacturer's instructions. If the aircraft is operated around coastal waters or other salt water environments, it must be washed and waxed on a more frequent basis to help fight corrosion. Special attention should be given to protect and seal around the rivet heads, skin laps, piano hinges, and any other area susceptible to corrosion. A heavier coating of wax should be applied on the wing and tail leading edges, the engine cowling nose area, and the propeller spinner to help reduce abrasive wear in these areas. However, don't polish or wax porous panels on the leading edges of airplanes equipped with the TKS Ice Protection System. (See caution above.) Wax should be reapplied after cleaning the aircraft.		

TITLE:	Engine Compartment Cleaning	MECH	INSP
INSPECTION INSTRUCTIONS	A. Washing of the engine and its accessories should be accomplished routinely in order to remove oil, grease, corrosive salts, and other residue. A periodic cleaning should be accomplished during inspection periods to aid in discovering defects.		

	MECH	INSP
B. Protective equipment and clothing such as, a face shield, coveralls, and chemically-resistant gloves should be worn when working with strong cleaning agents. Use the least toxic cleaning agent that will effectively accomplish the task at hand.		
CAUTION: Cover the aircraft's propeller in order to prevent any alkaline cleaner from coming in contact with it during washing procedures.		
CAUTION: Do not use gasoline or other highly flammable materials for washing the aircraft or any of its components.		
CAUTION: Do not wash the engine while it is still hot or while it is running. Allow the engine to cool down prior to cleaning.		
C. Cleaning procedures should be performed in a well-ventilated area and fire fighting equipment should be readily available. No smoking and no open flames should be allowed within a 100 foot radius of the cleaning area. Compressed air should be set at the lowest effective pressure for use in drying, or as a cleaning agent. Steel wire brushes should not be used for cleaning the aircraft; a stiff, nylon or similar bristle brush may be used if one is needed to remove grease and grime.		

ACFT TYPE		**300 HOUR INSPECTION REQUIREMENTS**	MECH	INSP
ALL	2	Conduct engine run-up checks as instructed below.		
TITLE:		Engine Run-up Checks and Tests		

		MECH	INSP
INSPECTION INSTRUCTIONS	A. The following checklist is provided for performing engine run-ups for routine maintenance and inspection procedures.		
	CAUTION: Start and operate the engine per the Pilot's Operating Handbook/FAA Approved Flight Manual. Observe all power plant operating limitations.		
	NOTE: Refer to applicable Kodiak Manual for the Ground Performance Check Chart for the PT6A-34 engine.		

Reservoir Fuel Low/Fuel Selectors OFF Warning Test						
Control	Position	X	Results			
Engine	Start (IAW POH/AFM)					
Aux Buss	OFF					
Power Lever	IDLE					
Propeller Lever	MAX RPM					
Condition Lever	LOW IDLE					
Auxiliary Fuel Pump	ON					
Fuel Selector Controls	BOTH OFF		and Check:	Y	N	Comments:
			Fuel Selectors OFF Warning light above PFD1 Illuminates			
			Audible Chime Heard			
			FUEL OFF annunciator shown on PFD			
			RESERVOIR FUEL annunciator shown on PFD when fuel level in reservoir decreases			Delay no more than 10 minutes. **NOTE:** Continue with checklist while waiting for annunciator to appear.
Fuel Selector Controls	BOTH ON					

	MECH	INSP
Initials:		

DOI - KODIAK 100 SERIES - 300 HOUR INSPECTION

Electrical Power Check								
Control/System	Position/Condition	X	Results					
Power Lever	IDLE							
Propeller Lever	MAX RPM							
Condition Lever	LOW IDLE							
Generator	ON							
Alternator	ON		and Check:	Y	N	Comments:		
			Note Alternator Amps					
			Note Generator Amps					
Left Pitot Heat	ON		and Check:	Y	N	Comments:		
			Alternator amps increase with applied load					
Right Pitot Heat	ON		and Check:	Y	N	Comments:		
			Generator amps increase with applied load					
			Check M Bus: 27.0V-28.2V				MECH	INSP
						Initials:		

Electrical Power Check								
Control/System	Position/Condition	X	Results					
Generator	OFF		and Check:	Y	N	Comments:		
			Alternator and batteries carry entire electrical load.					
			GEN FAIL annunciator shown on PFD					
			M Bus: 24-25.5V (Depending on battery voltage)					
			E Bus: 28.3-29.1 V					
Generator	ON							
Alternator	OFF		and Check:	Y	N	Comments:		
			Generator carries entire electrical load.					
			ALTERNATOR FL annunciator shown on PFD					
			M Bus: 27.0-28.2 V					
			E Bus: Approx.. 1 V less than Bus M volts					
Generator & Alternator	OFF		and Check:	Y	N	Comments:		
			Batteries carry entire electrical load					
			ALTERNATOR FL annunciator shown on PFD					
			GEN FAIL annunciator shown on PFD					
Generator	ON							
Alternator	ON						MECH	INSP
						Initials:		

DOI - KODIAK 100 SERIES - 300 HOUR INSPECTION

Engine Idle Check								
Control/System	Position/Condition	X	Results					
Power Lever	IDLE							
Propeller Lever	MAX RPM							
Condition Lever	LOW IDLE		and Check:	Y	N	Comments:		
			Electrical Load approx. 50 amps					
			Ng speed 52.5-55.5%					
Condition Lever	HIGH IDLE		and Check:	Y	N	Comments:		
			Ng speed 68-72%				MECH	INSP
						Initials:		

Propeller Governor Operational Check								
Control/System	Position/Condition	X	Results					
Propeller Lever	MAX RPM							
Condition Lever	LOW IDLE							
Power Lever	ADVANCE until Np stabilizes at 2200 RPM +0/-10 RPM							
Power Lever	ADVANCE 10% Ng		and Check:	Y	N	Comments:		
			Np stabilizes at 2200 RPM					
Power Lever	IDLE							
Propeller Lever	LOW RPM							
Power Lever	ADVANCE until Np stabilizes at approximately 1900-2030 RMP							
Power Lever	ADVANCE 10% Ng		and Check:	Y	N	Comments:		
			Np stabilizes at 1900-2030 RPM					
Power Lever	IDLE							
Propeller Lever	MAX RPM						MECH	INSP
						Initials:		

Propeller Overspeed Governor Operational Check								
Control/System	Position/Condition	X	Results					
Propeller Lever	MAX RPM							
Overspeed Governor Test Switch	Press and Hold							
Power Lever	ADVANCE until Np stabilizes at 2070 RPM +/- 50 RPM							
Power Lever	ADVANCE Ng 10%		and Check:	Y	N	Comments:		
			Np stabilizes at 1900-2030 RPM					
Power Lever	IDLE							
Overspeed Governor Test Switch	Release							
Power Lever	ADVANCE		and Check:	Y	N	Comments:		
			Governor Limits to 2200 RPM				MECH	INSP
						Initials:		

DOI - KODIAK 100 SERIES - 300 HOUR INSPECTION

Power Lever Reverse Ng Speed Pickup Check								
Control/System	Position/Condition	X	Results					
Propeller Lever	MAX RPM							
Condition Lever	HIGH IDLE		and Check:	Y	N	Comments:		
			Note Np RPM					
			Note Ng %					
Power Lever	Move slowly to BETA Range		and Check:	Y	N	Comments:		
			Note Np RPM					
			Note Ng %					
Power Lever	MAX REVERSE		and Check:	Y	N	Comments:		
			Max reverse torque is a minimum of 700 ft. lbs.					
			Propeller RPM does not exceed 2100 RPM					
Power Lever	IDLE		and Check:	Y	N	Comments:	MECH	INSP
						Initials:		

Emergency Power Lever Annunciator Test								
Control/System	Position/Condition	X	Results					
Power Lever	IDLE							
Propeller Lever	MAX RPM							
Condition Lever	LOW IDLE							
Emergency Power Lever	Slowly ADVANCE		and Check:	Y	N	Comments:		
			ITT, TRQ, and Ng limits at all time					
			Keep Ng increase at less than 4% per sec.					
			EMER PWR LVR annunciator shown on PFD					
Emergency Power Lever	SLOWLY increase Ng to 67% Ng							
Emergency Power Lever	SLOWLY reduce to NORMAL (Full Aft)		and Check:	Y	N	Comments:		
			Keep Ng decrease at less than 4% per sec.					
			EMER PWR LVR annunciator extinguishes				MECH	INSP
						Initials:		

ACFT TYPE		**300 HOUR INSPECTION REQUIREMENTS**	MECH	INSP
ALL	3	Engine Inlet and Inertial Air Particle Separator (as equipped, either with Single-actuated or Dualactuated): Inspect for security of installation, condition and proper freedom of movement while accomplishing an operational check. Inspect door pivot points for proper condition. Check actuator(s) and linkage for proper operation and freedom of movement. Check for full opening of bypass door through inlet duct. Lubricate the separator actuators with LPS 1.		
ALL	4	Engine Cowling - for cracks, and defects.		
ALL	5	PY and P3 Line Heater Check: Perform an operational check of PY and P3 heaters.		
ALL	6	Igniters: Perform an operational check by turning on the master switch and ignition switch while verifying illumination of the IGNITION ON annunciator and proper function of both igniters.		
ALL	7	Flaps - Trim Compensation Unit Check: Perform a Pitch Trim Compensation Unit Functional Check.		
ALL	8	Elevator Trim Wheel and Indicator: Inspect the trim wheel for proper condition and security of installation. Operate the trim wheel and electric trim to verify proper function, freedom of movement and full range of motion. Verify the indicator functions properly. Perform an electric trim operational check in accordance with the POH/AFM.		

DOI - KODIAK 100 SERIES - 300 HOUR INSPECTION

ACFT TYPE		300 HOUR INSPECTION REQUIREMENTS	MECH	INSP
ALL	9	Instrument Panel Switches: Check operation; inspect terminals, wiring, and mounting for proper condition and security of installation.		
ALL	10	Autopilot Unit and Control Switches: Check for security of installation and proper operation. Perform an operational check of the autopilot system.		
ALL	11	Flap System: Perform an operational check of the flaps through their full range of travel. Inspect for loose rivets, corrosion, cracks, wrinkles, and dents. If so equipped, inspect vortex generators for condition and security. Inspect flap attach points for proper security and condition. Check flap operation for any erratic movement, interference, or binding. Check for proper operation of the flap position indicator.		
ALL	12	Aileron Trim Tab: Perform an operational check of the electric aileron trim system. Inspect ram attaching hardware for unusual wear and security of installation. Perform an Aileron Trim Tab vertical free play inspection (maximum allowed is 0.085").		
ALL	13	Pitot/Static Tube Heat: Operate the pitot heat for approximately 30 seconds and verify proper operation of pitot heat. Turn pitot tube heat OFF.		
ALL	14	Stall Warning System (If Equipped with a Stall Warning Computer): Perform an operational check of the lift transducer, stall warning horn, stall warning horn relay, and stall warning test switch. (Ground Check.)		
ALL	15	Stall Warning System (if not equipped with a Stall Warning Computer): Perform an operational check of the warning vane and horn. (Ground Check.)		
ALL	16	Exterior Lighting: Check for proper operation of beacon, strobe, NAV, taxi, pulse, and landing.		
ALL	17	Cabin Electrical Heating Units: Inspect for security of installation, Foreign objects, and signs of overheating. Perform an operational check.		
ALL	18	Exterior Fuselage: Inspect the exterior of the fuselage for general condition. Inspect skins for damage, corrosion, and loose or working fasteners.		
ALL	19	Exterior Placards and Markings: Verify presence, legibility, and security of attachment. See appropriate Kodiak Manual for requirements.		
ALL	20	Interior Placards and Markings: Verify presence, legibility, and security of attachment. See appropriate Kodiak Manual for requirements.		
ALL	21	Inflatable Crew Door Seal System (If Equipped): Inspect compressor, wiring, tubing, and poppet valves for security and proper installation. Visually inspect door seals and perform operational check.		
ALL	22	Propeller Blades: Wash the blades, inspect for nicks, gouges, scratches, depressions, looseness, cracks, security, and condition. Refer to Hartzel Propeller Owner's Manual and Logbook (Manual No. 149) for further Instruction.		
ALL	23	Propeller Spinner: Remove; inspect for cracks, security, condition, and wash.		
ALL	24	Propeller Spinner Bulkhead: Inspect for cracks, security, and condition.		
ALL	25	Propeller Hub: Inspect exposed area for wear, cracks, security, condition and loose/missing hardware.		
ALL	26	Propeller Mounting: Inspect for proper mounting and visually inspect for security of installation.		
ALL	27	Propeller: Inspect for grease and oil leaks. Perform a preload plate set screw inspection as instructed below.		
TITLE:		Preload Plate Set Screw Check		

		MECH	INSP
INSPECTION INSTRUCTIONS	1. Manually rotate the propeller and listen for possible noise caused by a broken set or jam nut that may be loose in the propeller hub.		
	2. With the propeller blades in the feathered position, make sure the feather (low) stop nuts are seated on the reverse adjustment sleeve. For more details, refer to appropriate manual.		
	3. If there is noise indicating a loose part or the propeller blades do not go completely to feather, remove the propeller. Send the propeller to a repair station for disassembly and inspection for a possible broken preload set screw.		
	NOTE: If a broken set screw is found, the propeller must be inspected for damage that may have been caused by the broken set screw, and the incident must be reported to the Hartzell Product Support Department.		

DOI - KODIAK 100 SERIES - 300 HOUR INSPECTION

ACFT TYPE		300 HOUR INSPECTION REQUIREMENTS	MECH	INSP
ALL	28	Battery Cables: Inspect for security, condition, and routing. Inspect battery terminal boots for deterioration, overheating, or burning.		
ALL	29	Battery Boxes: Inspect for corrosion, security, and condition. Inspect battery hold-down mechanism for proper function.		
ALL	30	Sealed Lead Acid Batteries: Inspect batteries for general security and condition. Check battery terminals for evidence of overheating and burning.		
ALL	31	Firewall Mounted Fuel Filter: Inspect for leaks, corrosion, security of installation, and general condition. Inspect and clean filter.		
ALL	32	Brake System Reservoir: Check for security of installation, condition, and leaks. Check for proper fluid level and any contamination		
ALL	33	Engine Mount - for cracks, looseness of mounting, and looseness of engine to mount.		
ALL	34	Engine Mount Elastomers - for poor condition and deterioration.		
ALL	35	Engine External Tubing, Wiring, Control Linkages, and Hose Assemblies: All accessible connections, clamps and brackets for attachment. **NOTE:** Inspect accessible lockwire and safety cable for security and installation. Check for wear, chafing, cracks and corrosion. **NOTE:** Visually inspect insulated air tubes for sign of swelling, cracking, bulging of rubber sheath material. Replace as necessary. Check fuel and oil lines for leaks.		
ALL	36	Pay particular attention to rear linkage cam box, fuel control unit arm, telescopic rod and rod end fittings. Disconnect rod ends and clean using solvent (PWC11-027) or (PWC11-031). Lubricate with light grease (PWC04-001) after engine external wash. Examine rod end for corrosion, roughness in rotation, side play and radial play. After lubrication reinstall rod ends and torque to specified value. Check free movement of linkage.		
		(1) Visually inspect the actuating levers, control cam, and control lever mounting bracket for cracks. Cracks are not permitted.		
		(2) Visually inspect the reversing lever guide pin bracket assembly on both faces of the fillet weld area around the guide pin for cracks. If cracks are found and/or fillet weld is on one face only, replace the bracket assembly (Ref. SB1416).		
		(3) Examine the parts for minor surface damage such as scores, nicks, scratches, and gouges. Minor surface defects may be cleaned up by local blending with a fine stone or crocus cloth (PWC05-061) making sure that all sharp edges and high spots are removed.		
		(4) Inspect the pin and bolt holes in each part and the slot in the control cam, for burrs and/or chipped edges. Clean up minor damage with a suitable Swiss file or fine stone.		
		(5) Examine the grooved pin for burrs, nicks, scores and similar defects on serrations which might interfere with the fit between mating parts. Clean up minor defects with a fine stone and check the fit of mating parts.		
		(6) Inspect the flexible shaft (wire rope) casing for cuts, dents, cracks, kinks, and similar defects which might prevent free movement of the internal wire rope. Minor damage is acceptable, providing the wire rope will operate freely without binding.		
		(7) Check the wire rope for breaks in the wires, twisting, kinking, and for separation of the reverse wound coils. Reject the wire rope if damaged. Repair is not permitted.		

ACFT TYPE		300 HOUR INSPECTION REQUIREMENTS	MECH	INSP
ALL	37	Air Inlet Screen: Check for cleanliness.		
		(1) Inspect the air inlet screen wire mesh for cleanliness and/or damage. Screens with broken wire mesh must be replaced. Clean undamaged screens.		
		(2) On early PT6A-34 engines Post-SB1191: Check the spacer (5, Fig. 201) for security; rebond as necessary.		
		(3) For PT6A-34AG engines with the bleed air case; inspect the case for general condition and surface damage. Check for security of the packing material.		

ACFT TYPE		300 HOUR INSPECTION REQUIREMENTS	MECH	INSP
ALL	38	Gas Generator Case: Inspect external surfaces, and fireseal mount ring brackets for cracks, distortion, and corrosion.		
		(a) Examine for general condition, including cracks, distortion, corrosion and evidence of overheating.		

	MECH	INSP
(b) Minor corrosion on exposed surface of gas generator case may be removed. **NOTE:** If condition of gas generator case indicates further inspection is required, remove fuel manifold adapters and spark igniters.		
1) Machined surfaces (bosses and pads) with corrosion pitting less than 0.010 inch deep and less than 75 percent of the surface is acceptable without repair.		
(c) On engines INSTALLED in the airframe, examine the engine mounts for attachment and condition (Ref. Aircraft Maintenance Manual).		
(d) On engines NOT INSTALLED in the airframe, examine the condition of the mounting pads and threaded holes. Damage to the threaded holes may be repaired (Ref. Approved Repairs).		

ACFT TYPE		300 HOUR INSPECTION REQUIREMENTS	MECH	INSP
ALL	39	Fireseal Mount Rings: Check for cracks and attachment of brackets and seals.		
		(1) Examine the mount ring halves (Pre-SB1445 or Post-SB1445) for attachment, damage and condition. **NOTE:** For the external tubes/lines passing through the mount rings, refer to relevant chapters in this manual.		
		(2) Examine the circumferential packing material for security (Pre-SB1445 or Post-SB1445). A loose strip may be rebonded (Ref. Approved Repairs).		
		(3) Examine the rear fireseal mount ring halves for attachment, damage and condition. **NOTE:** For the external tubes/lines passing through the mount rings, refer to the relevant chapters in this manual.		
		(4) Examine the circumferential insulating strips for attachment. Loosened strips may be rebonded.		
		(5) Inspect mount ring spacers (Post-SB1441) for damage and condition. Replace as necessary.		

ACFT TYPE		300 HOUR INSPECTION REQUIREMENTS	MECH	INSP
ALL	40	Exhaust Duct: Check for cracks and distortion.		
		(1) For periodic, hot section, or unscheduled inspections such as engine sudden-stoppage or suspected aircraft heavy landing, examine the exhaust duct critically for evidence of the following:		
		(a) Examine the outer surface condition for buckling, ripples or similar distortion.		
		(b) Inspect exhaust port flanges for cracking. Cracks not exceeding 0.500 inch in length and do not progress into the stitch weld or cracks in a tangential direction not exceeding 1.000 inch long are acceptable provided they are stop drilled with a 1/16 (0.0625) inch drill.		
		(c) Examine the outer surface, particularly in the vicinity of Flanges A and C and the exhaust ports, for cracking in the metal skin, welds or flange bolt holes. Check the T5 system exit tube for security. The presence of cracks requires the removal of the exhaust duct for overhaul.		
		(d) Check for the integrity of internal structure through the exhaust ports. **NOTE:** Refer to the Aircraft Maintenance Manual for removal/installation of the exhaust stubs.		
		(e) Using suitable lighting or a borescope, examine the internal structure as far as possible for cracks, looseness and distortion.		
		(2) For engines that have incorporated SB1610 since the last overhaul and that exhibit inferior welds.		
		(a) Inspect for cracks at each minor inspection and repeat the inspection at intervals not to exceed 150 hours of flight time.		
		(b) If cracks are found, repeat the inspection at intervals not to exceed 25 hours flight time. All cracks will be marked with a suitable metal marking pencil (PWC05-018), and the length, location, duct hours and Time Since Overhaul recorded.		
		(c) Using 5x magnification, visually inspect the forward area of the exhaust duct for cracks, from the propeller reduction gearbox mounting flange to 2 inches aft around the entire circumference of the duct.		

	MECH	INSP
1) Exhaust ducts are considered serviceable provided; a) There are no more than 3 cracks. b) The total length of all cracks does not exceed 2 inches. c) No one crack exceeds 1 inch. d) When there are 2 or 3 cracks they must be separated by a minimum of 6x the length of the longest crack or 3 inches, whichever is greater. e) The growth rate of any crack does not exceed 0.015 inch/hour of operation.		
(3) With the power turbine vane ring and stator housing removed (Ref. Fig. 201):		
(a) Inspect the exhaust duct (1) for cracks at Flange D in the location shown in detail A. Close visual and dye penetrant inspection should be carried out. When cracks are indicated, remove the exhaust duct for overhaul.		

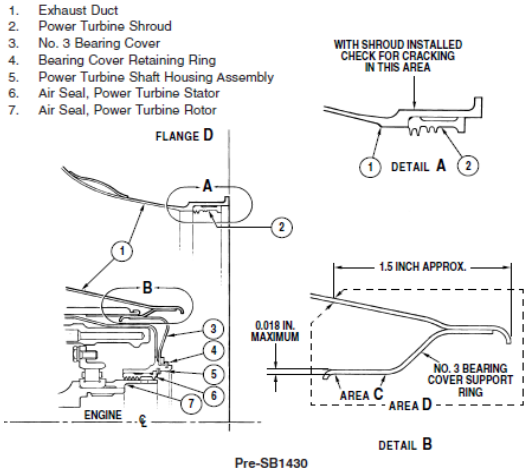

Removal/Installation of Exhaust Duct
Figure 201

	MECH	INSP
(4) With the power turbine disk removed:		
(a) Inspect the installed No. 3 bearing cover (3) Pre-SB1430. If evidence of looseness or rotation is present, refer to appropriate manual.		
(b) Inspect the exhaust duct (1) area C where the bearing cover (3) Pre-SB1430 outside diameter mates with the exhaust duct. Light fretting may be polished out to the minimum material thickness of 0.018 inch. Evidence of the bearing cover rotation requires close visual and fluorescent dye penetrant inspection. The presence of cracks requires the removal of the exhaust duct for overhaul.		
(c) Inspect the end of the ski jump Pre-SB1430 area D, Detail B, for cracks using fluorescent dye penetrant inspection. No cracks allowed.		

ACFT TYPE		300 HOUR INSPECTION REQUIREMENTS	MECH	INSP
ALL	41	Propeller Shaft Seal: Check for oil leaks.		
		A. Inspection of Oil Seal Retaining Ring or Ring Halves		
		(1) Examine oil seal retaining ring or ring halves for nicks, burrs and surface damage. Light stoning of damaged surfaces is acceptable.		
		(2) Check integrity of Post-SB1381/Post-SB1652 felt strip inserts in oil seal retaining ring halves . If worn or damaged, retaining ring halves must be shipped to an approved overhaul facility for felt strip insert replacement.		
		B. Inspection of Oil Seal Runner		
		(1) Examine visible area of seal runner for nicks, burrs and other surface damage caused by tools during removal of seal. No repair is acceptable. Ship power output section of engine to an approved overhaul facility for replacement of defective seal runner.		

	MECH	INSP
NOTE: If applicable, check the integrity of the sealant (PWC09-001) between the forward lip of the oil seal runner and propeller shaft. Replace if necessary.		
(2) Examine the propeller shaft oil seal contact area on seal runner for wear (grooving). If concentrated wear is present, installation of an alternate offset propeller shaft oil seal should be considered. This offset seal will contact the runner at a different location (Ref. IPC).		

ACFT TYPE		300 HOUR INSPECTION REQUIREMENTS	MECH	INSP
ALL	42	Accessories: Inspect attachment and linkages, air, oil and fuel lines. **NOTE:** Visually inspect insulated air tubes for sign of swelling, cracking, bulging of rubber sheath material. Replace as necessary. Inspect for oil and fuel leaks as applicable. Check starter-generator gearshaft splines for wear (At starter-generator removal/replacement only)		
		(1) Insulated Tube Assemblies		
		(a) Examine flanged end fitting for elongated holes.		
		(b) Examine tube assemblies IAW applicable engine maintenance manual.		
		(c) Blend out damage that does not exceed specified limits. Replace tube assemblies damaged beyond limits.		
		(d) Examine the insulation on the pneumatic tube assemblies for cuts in the outer rubber sheath. Surface cuts up to three inches long may be repaired.		
		(e) If surface damage exceeds specified limits above, but depth is superficial, sheathing may be repaired by replacement of damaged portion.		
		(f) Examine the metal braid and electrical lead on heated tubes for cuts. Up to three broken wires per plait, or six broken wires per linear foot, are acceptable. Replace the tube assemblies where metal braid is chafed or worn through to the lead conductors.		
		(2) For Post-SB1495 Engines Air Filter Housing Drain Valve Assembly.		

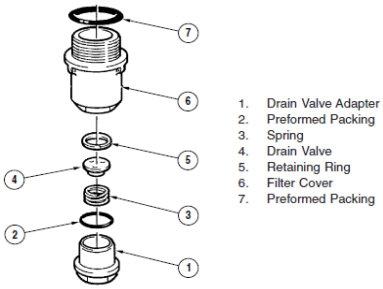

Post-SB1495 Engines

Removal/Installation of Air Filter Housing Drain Valve
Figure 205

	MECH	INSP
(a) Filter Cover (6):		
1) Check lockwire holes for damage (tearing, cracks).		
2) Check threads for damage.		
3) Check that contact area is free of nicks and/or scratches.		
(b) Retaining Ring (5):		
1) Check for distortion. Replace if distorted.		
(c) Drain Valve (4):		
1) Check that contact area is free of nicks and/or scratches.		
2) Make sure drain holes are clear and unobstructed.		

	MECH	INSP
(d) Valve Spring (3):		
1) Check for corrosion and/or damage. Reject if unsatisfactory.		
(e) Drain Valve Adapter (1):		
1) Check threads for damage.		
2) Check that contact area is free of nicks and/or scratches.		
3) Check flats and lockwire holes are free of damage.		
4) Check retaining ring groove. Reject if damaged or worn.		
A. Accessory Gearshaft Spline Wear Check.		

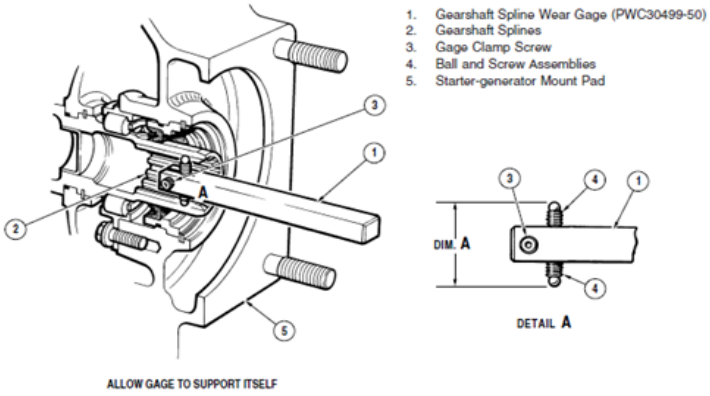

Accessory Gearshaft Spline Check
Figure 204

	MECH	INSP
NOTE: The accessory gearshaft must be checked for spline wear at related component removal/installation (Ref. Aircraft Maintenance Manual).		
(1) Release the clamp screw (3) and adjust the screw assemblies (4) to obtain the dimension of 0.660 inch over the ball ends. Tighten the clamp screws and recheck the dimension.		
(2) Tilt the gage (1), outer end uppermost, and insert the gage (PWC30499-50) into the shaft centerbore until the ball ends are approximately midway along vertically opposite splines.		
(3) Gradually release the gage, allowing it to support itself in the shaft. If the gage is self-supporting, the gearshaft is considered serviceable. If the gage extension falls below the horizontal, the gearshaft must be replaced.		
B. Oil Filler Cap, Dipstick/Gage Assembly and Oil Filler Tube.		

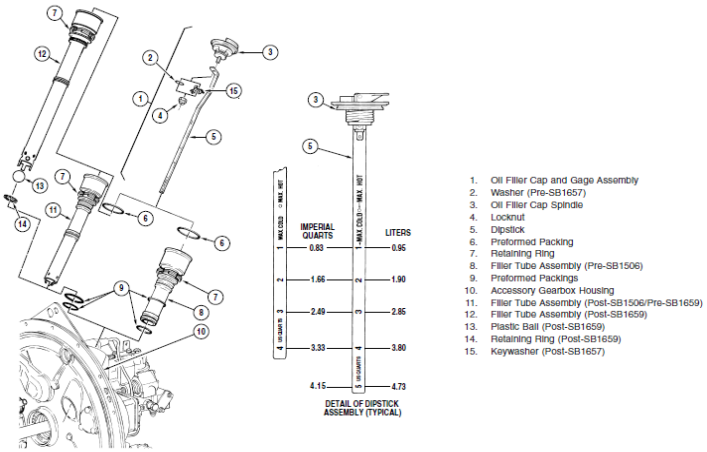

Removal/Installation of Oil Filler Cap, Dipstick/Gage Assembly and Oil Filler Tube
Figure 203

	MECH	INSP
(1) Examine the filler cap and level indicator assembly, and the oil filler tube for corrosion and signs of damage.		
(2) For Post-SB1506 Engines: Make sure the ball moves freely in the check valve of the filler tube.		
(3) Check the spring-loaded locking feature of the cap for serviceability. If the force required to depress/lift the handle is outside the limit (8 to 11 lbs.), remove the cap and tighten/loosen the self-locking nut to meet the required limit.		
NOTE: Ensure the self-locking nut is securely fastened (refer to SB1637 - Inspection of Oil Tank Filler Cap).		
(4) Check the gage blade for security and visible damage.		
(5) When the cap is locked, there should be no movement. If movement is found, replace the cap.		
C. Inspection of Scavenge Pump Inlet Screen		

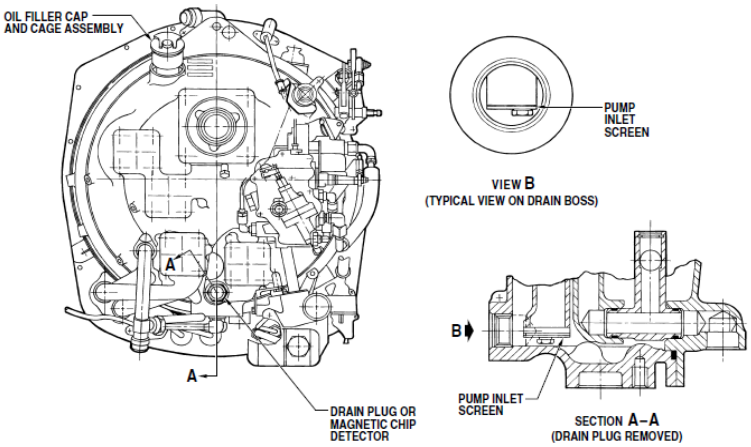

Scavenge Pump Inlet Screen Inspection
Figure 205

	MECH	INSP
(1) Remove oil drain plug located on the AGB housing (Ref. Fig. 205).		
NOTE: For engine equipped with an AGB chip detector, remove the chip detector.		
(2) Collect drained oil in a clean container and check for any debris IAW maintenance manual.		
(3) Use a mirror and suitable light source (or borescope) and inspect the scavenge oil pump inlet screen for carbon or debris IAW appropriate maintenance manual.		
NOTE: Any foreign material found blocking the screen or contained in the oil should be identified. Look especially for paint flakes approximately 1/8 inch to 1/2 inch in diameter IAW appropriate manintenance manual.		
(4) If carbon or debris is present, clean the inlet screen (Ref. Cleaning/Painting, Fig. 205).		
(5) Install the drain plug on the AGB housing IAW appropriate maintenance manual.		
NOTE: For engine equipped with an AGB chip detector, install the chip detector.		
(6) Replenish the drained oil (if not contaminated by foreign material) in oil tank (Ref. Chapter 72-00-00, SERVICING).		

ACFT TYPE		300 HOUR INSPECTION REQUIREMENTS	MECH	INSP
ALL	43	First-stage Compressor Rotor: Do a visual inspection with a mirror or a borescope. **NOTE:** If any FOD has caused the engine to become prone to engine surges or causes unusual compressor whining, the large bent airfoil will make the whining sound. Remove the engine immediately.		

ACFT TYPE		300 HOUR INSPECTION REQUIREMENTS	MECH	INSP
ALL	44	Hot Section: Examine with borescope. In conjunction with periodic fuel nozzle leak and function tests. For Post-SB1590 engines NOT incorporating SB1627 or SB1628: (1) Analyse engine condition trend monitoring system data on a weekly basis. No baseline HSI is required. (2) If the analysis indicates that the engine is deteriorating, then do a hot section inspection.		
		Hot Section Inspection (Ref. Fig. Appropriate HSI Sheets)		
		(1) For a normally scheduled HSI, do a ground performance run.		
		(2) Remove the RGB strainer, the main oil filter and the chip detector(s). Verify the debris.		
		(3) Verify Compressor for FOD.		
		(4) Remove power section/power section module.		
		(5) Measure the radial CT blade tip clearance and remove compressor turbine disk and blade assembly IAW appropriate manual.		
		(6) Remove combustion chamber liner IAW appropriate manual.		
		NOTE: Should it be necessary during HSI, to make a more detailed inspection of components which remain installed, those components should be removed IAW appropriate manual.		
		(7) Verify components IAW appropriate Pratt and Whitney maintinance manual.		
		(8) If HSI is done due to over temperature, remove PT stator housing IAW appropriate manual.		
		(9) If necessary, calibrate and verify aircraft instrumentation after engine assembly.		
		(10) Do a ground performance run and inspect BOV closing point IAW appropriate manual.		
		(11) If a significant T5 increase is noted after ground performance run, borescope hot section for CT blade shroud rub.		

ACFT TYPE		300 HOUR INSPECTION REQUIREMENTS	MECH	INSP
ALL	45	Oil System: Check oil level. **NOTE:** For oil change recommendations, refer to SB1001. Check condition and locking of oil filler cap. Oil filter elements and secondary screen (coarse hat-type screen attached to the inner end of the filter). Elements must be inspected and cleaned. Light traces of sediment only may be removed from the main filter screen. All other contamination requires replacement of filter element. Any foreign material found in main oil filter or on chip detector, should be identified before further inspection/operation. **NOTE:** Inspect initially at 100 hours with extension to relevant airframe zone inspection based on inspection results but not to exceed 200 hours. **NOTE:** If the engine has a recent history (within 200 flight hours) of generating carbon debris; do the inspection at 100 hours interval and replace the filter element at 300 hours interval. Refer to appropriate manual for the instructions to start oil filter inspection again and for the oil filter replacement intervals. **NOTE:** If carbon like deposits are found, drain accessory gearbox oil into a clean container and examine debris. Varnish flakes are non metallic and are usually dark on one side and shiny, similar to bronze, on the other side. They are hard and will not form into paste when rubbed between fingers.		
ALL	46	Check magnetic chip detector(s) for continuity, open circuit must exist indicating no contamination at pole tips. If continuity is there, remove and examine for contamination. Any foreign material found on the chip detector or in the main oil filter must be identified before further inspection/operation. Refer to applicable manual. (See NOTE 3). **NOTE 1:** FOR SINGLE ENGINE AIRCRAFT, If the chip detector is connected to a cockpit indicating system, examine the chip detector initially at 100 hours with extension to relevant airframe zone inspection based on the inspection results, but not more then 200 hours. **NOTE 2:** FOR TWIN ENGINE AIRCRAFT, If the chip detector is connected to a cockpit indicating system, examine the chip detector initially at 100 hours with extension to relevant airframe zone inspection based on the inspection results, but not more than 400 hours. **NOTE 3:** While the chip detector is removed, examine with both poles bridged. With poles unbridged, inspect if continuity exists, and if no continuity exists, replace the chip detector.		

ACFT TYPE		300 HOUR INSPECTION REQUIREMENTS	MECH	INSP
ALL	47	Bridge chip detector(s) magnetic pins with suitable jumper, and using a suitable ohmmeter, check continuity between connector pins. If continuity does not exist, replace chip detector. Any foreign material found on chip detector or in main oil filter should be identified before further inspection/operation. Refer to appropriate maintenance manual. **NOTE:** For aircraft equipped with an airframe supplied indicating device, the integrity of the complete indicating system can be checked by re-attaching the electrical connector to the removed chip detector and check for chip indication when magnetic poles are bridged. Closed circuit condition must exist.		
ALL	48	Check scavenge oil pump housing for leaks.		
ALL	49	Check the AGB internal scavenge oil pump inlet screen IAW appropriate maintenance manual. Collect drained oil. Using a mirror and a flashlight inspect the scavenge oil pump inlet screen. Any foreign material found blocking the screen or contained in the oil should be identified before further operation.		
		A. Cleaning of Scavenge Oil Pump Inlet Screen (Ref. Fig. 205)		

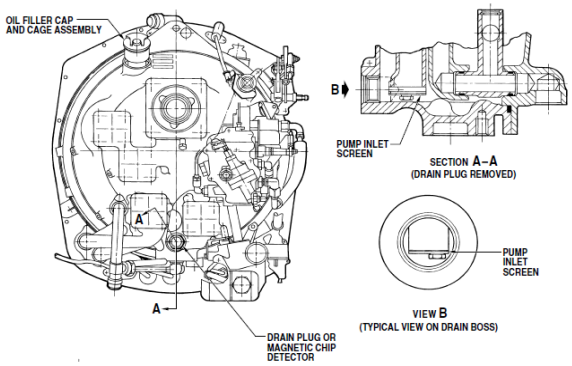

Scavenge Pump Inlet Screen Inspection
Figure 205

	MECH	INSP
(1) If carbon is present on the screen mesh, loosen with a suitable small plastic scraper or similar nonmetallic scraper. Do not deform the screen mesh.		
(2) Flush any carbon residue from the AGB as follows:		
(a) Remove the oil filler cap (Ref. Removal/Installation).		
(b) Remove the retaining ring and the oil filler tube (Ref. Removal/Installation)		
(c) Place a suitable container under the AGB drain, and pour approximately 34 fluid ounces (one liter) of new engine oil (PWC03-001) heated to 122°F (50°C), into the AGB filler tube opening. Make sure oil does not enter oil tank.		
(d) Let oil drain. Examine inlet screen and surrounding area to make sure carbon residue is removed. If not, repeat flushing procedure above.		
(3) Install oil filler tube (Ref. Removal/Installation).		
(4) Refill oil tank IAW appropriate maintenance manual.		

ACFT TYPE		300 HOUR INSPECTION REQUIREMENTS	MECH	INSP
ALL	50	Fuel System: Check fuel for water contamination. Check fuel pump for installation and leaks IAW appropriate manual. **NOTE:** If airframe fuel boost pump fails or is inadvertently left off for an accumulative time in excess of 10 hours, the engine driven fuel pump must be removed and replaced. The removed pump should be sent to an approved overhaul facility. **CAUTION:** ON NEW AIRCRAFT, CHECK FILTER AFTER EACH FLIGHT UNTIL NO CONTAMINATION IS EVIDENT. CHECK AFTER FIRST FLIGHT OR GROUND RUN WHENEVER ANY COMPONENT UPSTREAM OF FILTER IS REPLACED.		
ALL	51	Check outlet filter for foreign matter or distortion IAW appropriate manual. Install new filter as service conditions dictate, not to exceed 600 hours and when fuel system contamination is suspected.		

			MECH	INSP
ALL	52	Check drain valve for installation and leaks IAW appropriate manual.		
ALL	53	Check FCU for installation, linkages and pneumatic tubes IAW appropriate manual.		
ALL	54	For Post-SB1568: Do a deceleration check IAW appropriate manual. **NOTE:** Not required for FCU identified with ‘‘RE52’’, ‘‘SB 73-3’’ or with a serial number that contains the letter F as prefix.		
ALL	55	For engines fitted with a manual override on the fuel control, check FCU Manual Override System for static operation.		
ALL	56	Check FCU for bearing wash-out, indicated by blue dye (grease and fuel mixed) at FCU vent .		
ALL	57	Check starting flow control/flow divider for installation and leaks IAW appropriate manual.		
ALL	58	Leak test and function test fuel manifold adapter and nozzle assemblies IAW appropriate manual. **NOTE 1:** Do the periodic borescope inspection of the hot section components in conjunction with the following tests (Ref. 2.B.). **NOTE 2:** Regular fuel nozzle maintenance is important for hot section durability. Inspection recommended at routine intervals according to: Engines ON fuel nozzle in-situ cleaning program, test fuel nozzles and repair as necessary. Where fuel quality is not sure, and for operators new to PT6A operation, inspection is recommended at 400 hours initially, with extension based on the operators experience and rejection rate, not more than 200 hours. For other operators, inspection is recommended at 600 hours initially, with extension based on the operators experience and rejection rate, not more than 200 hours. Engine NOT ON fuel nozzle in-situ cleaning program, test fuel manifold adapter. Where fuel quality is not sure, and for operators new to PT6A operation, cleaning/inspection is recommended at 200 hours initially, with extension, based on the operators experience and rejection rate, not more than 200 hours. For other operators, inspection is recommended at 400 hours initially, with extension based on the operators experience and rejection rate, not more than 200 hours.		
ALL	59	Check oil-to-fuel heater installation IAW appropriate manual.		
ALL	60	Ignition System: Check ignition exciter/current regulator for installation and condition IAW appropriate manual.		
ALL	61	Check ignition cables for chafing, wear and installation IAW appropriate manual.		
ALL	62	Check spark igniter/glow plugs for cleanliness and erosion. Check function IAW appropriate manual. **NOTE:** Inspect initially at 100 hours with extension to relevant airframe zone inspection based on inspection results but not to exceed 200 hours.		
ALL	63	Pneumatic System: Check P3 filter for installation IAW appropriate manual.		
ALL	64	Inspect pneumatic tubes and lines for cracks and damages especially at the end fittings and joints.		
ALL	65	Clean or replace filter, dependent on condition, service experience or environment IAW appropriate manual. **NOTE:** Visually inspect the P3 filter for corrosion. If the filter shows presence of corrosion, discard the filter and replace with a new filter.		
ALL	66	Clean and inspect Post-SB1495 P3 filter drain valve housing assembly IAW appropriate manual. **NOTE:** Filter contamination is greatly influenced by particular operating conditions and environment, inspection intervals may be modified accordingly.		
ALL	67	Propeller Governor and Overspeed Governor: Inspect for leaks, security, and condition. Inspect security of installation on electrical connections.		
ALL	68	Inspect fuel nozzles as instructed below.		
		CAUTION: USE EXTREME CARE WHEN HANDLING FUEL NOZZLE ASSEMBLIES SINCE EVEN FINGERPRINTS ON THE ORIFICE MAY PRODUCE POOR SPRAY PATTERN. CLEAN, LINT FREE GLOVES SHOULD BE WORN AT ALL TIMES WHEN HANDLING PARTS.		
		A. Fuel Nozzle Assembly		
		(1) Check the nozzle assembly for burrs and similar defects. Threads and hexagon may be lightly stoned to remove nicks and burrs.		
		B. Nozzle Sheath (Ref. Fig. 206)		

	MECH	INSP
(1) Erosion, any loss of coating is acceptable provided any loose coating is removed by light buffing and 0.040 inch minimum dome thickness is retained .		
(2) Fretting wear, maximum permissible depth is 0.010 inch; deburr raised material.		
C. Manifold Adapter		
(1) Check the locating pin for security in the adapter and for burrs and similar defects. Check threads for damage.		
D. Transfer Tubes (Ref. Fig. 207)		
(1) Examine for general condition and check preformed packing grooves and lands for damage. Minor surface damage in the form of burrs and scratches, may be removed by blending.		
(2) Inspect for bent transfer tubes (1) as follows:		
(a) Put the transfer tube on flat surface and roll the transfer tube. If an elliptical motion is produced at any point along the tube, reject the tube.		
(3) Inspect condition of external anodic finish.		
(4) Examine the bore of each tube is free from blockage. Install the cap on the transfer tube (1) after inspection.		

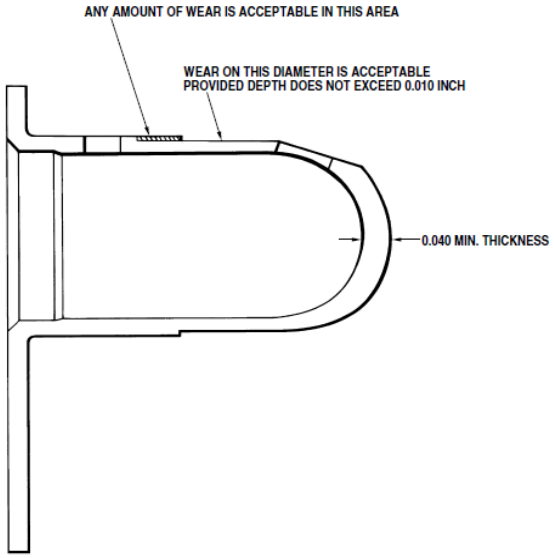

Nozzle Sheath Wear Limits
Figure 206

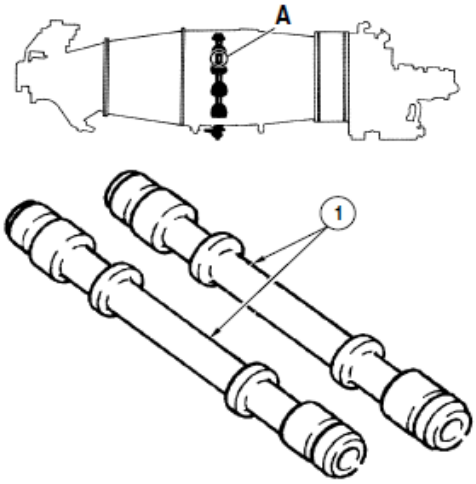

DETAIL A
(TYPICAL)

Fuel Manifold Transfer Tube
Figure 207

ACFT TYPE		300 HOUR INSPECTION REQUIREMENTS	MECH	INSP
ALL	69	EPA and Oil Drain Sump Cans: (If Equipped) Inspect can for leakage, condition, and security of installation. Completely drain can.		
ALL	70	EPA Can/Ejector Assembly: (If Equipped) Inspect assembly for leakage, condition, and security of installation. Completely drain can. Ensure that the alternate vent at the top of the ejector assembly is clean and free from debris.		
ALL	71	Engine System Drain Lines: Inspect the engine oil and fuel drain lines for proper routing of lines, deterioration of hoses, security of installation, and signs of leaks or damage.		
ALL	72	Drain Vents: Inspect vents on lower portion of cowlings for cleanliness and obstructions.		
ALL	73	Engine Fuel Lines: Inspect motive flow and fuel supply lines for chafing, deterioration, fuel leaks, and security of installation.		
ALL	74	Inspect the mounting lugs visually for cracks and other defects. Cracks are not permissible; minor surface damage may be repaired.		
ALL	75	Inspect the machined mounting faces for gouges, nicks, scores, scratches, and similar surface defects which can damage the gasket between the pump and accessory gearbox and/or prevent proper mating of the fuel control unit to the pump. Particular attention should be paid to the seal recess at the bypass port between the studs in mounting face for the fuel control unit.		

DOI - KODIAK 100 SERIES - 300 HOUR INSPECTION

ACFT TYPE		300 HOUR INSPECTION REQUIREMENTS	MECH	INSP
ALL	76	Inspect the bore of the inlet port for damage on the sealing surface.		
ALL	77	Check the studs for security and for damage to the threads.		
ALL	78	Inspect the seal seepage drain port and fuel outlet port adapter for damage to the threads.		
ALL	79	Check for leakage from seal drain port:		
		(a) Coupling drive oil leaks from fuel pump drain should not exceed 3 cc per hour. If limits are exceeded, replace plain seal on accessory gearbox pad (Ref. 72-60-00, Removal/Installation). If leaks are still present and exceed limits, ship unit for overhaul.		
		(b) Fuel leaks should not exceed 20 cc per hour. If leakage exceeds limit, ship fuel pump for overhaul. NOTE: If limit is exceeded, inspect FCU driveshaft bearing area for fuel contamination.		
		(1) Examine mounting flange, housing and components of lever mechanism for cracks and other surface defects. Cracks are not permissible; minor defects may be repaired.		
		(2) Examine ports for damage to internal threads and, if evident, send unit for rectification at an overhaul facility.		
		(3) Examine elbow fittings for damage to threads.		
		(4) Examine external surfaces for corrosion and for general condition of anodic treatment.		
		(5) Traces of blue grease on the driveshaft bearing face and retaining plate are acceptable. Presence of grease, with a hard or jelly-like consistency, indicates that the area has not been contaminated by excess fuel or oil and the driveshaft bearing stays lubricated.		
		(6) Check that the drive shaft turns smoothly by spinning with light finger force. The driveshaft should stop turning when finger force is released.		
		NOTE: A free spinning driveshaft indicates that the bearing has been subjected to lubricant wash-out and this is cause for rejection. Send the unit for rectification to an approved overhaul facility.		
		(7) Check the drive couplings and FCU driveshaft for worn splines. Reject unit if any wear is found.		
		(8) Brinelling of the driveshaft bearing is cause for rejection. Send the unit for rectification to an approved overhaul facility.		

ACFT TYPE		300 HOUR INSPECTION REQUIREMENTS	MECH	INSP
ALL	80	Inspect the splines on the drive coupling for nicks, gouges and chips.		
ALL	81	Examine the external surfaces of the pump for corrosion and for the general condition of the anodic treatment.		
ALL	82	Check for signs of leakage from the joint between the pump cover and pump housing. If leakage is evident, return the pump for overhaul.		
ALL	83	Examine the inlet filter element for damage and/or breaks in the screen mesh.		
ALL	84	The discharge filter is disposable and should be subjected only to visual examination for defects if the life of the part has not expired.		
ALL	85	Check that flexible hoses are fitted to avoid interference with the operation of the reversing linkage mechanism (Ref. 76-10-00).		
ALL	86	Sundstrand Fuel Pump Coupling In-Situ Inspection - Remove the drain line and fitting from the fuel pump drain port (2, Fig. 202). **CAUTION:** IF A COTTON SWAB OR SIMILAR DEVICE IS USED FOR THIS INSPECTION, CARE MUST BE TAKEN TO MAKE SURE NO FOREIGN MATTER REMAINS IN THE DRAIN PORT OR ASSOCIATED FITTINGS AND LINES.		

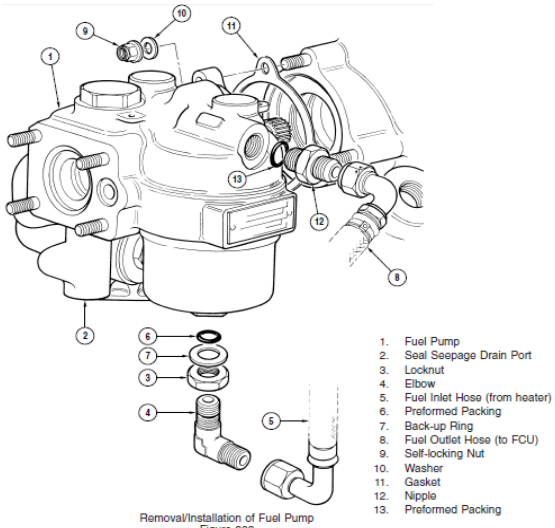

Removal/Installation of Fuel Pump
Figure 202

ACFT TYPE		300 HOUR INSPECTION REQUIREMENTS	MECH	INSP
ALL	87	Insert a cotton swab, or equivalent, 1.0 to 1.5 in. deep into the drain port of the fuel pump (Ref. Fig. 203).		
ALL	88	Angle the cotton swab (Ref. Fig. 203) and roll it inside the drain port to collect evidence of a possible reddish-brown deposit (iron oxide).		

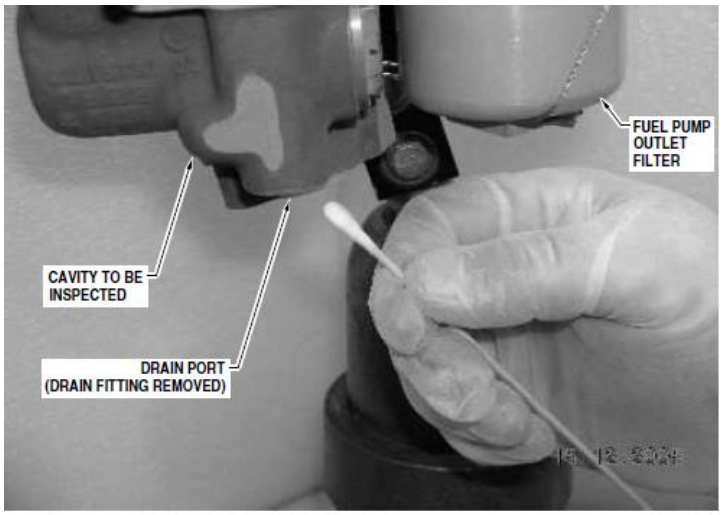

Fuel Pump In-situ Inspection
Figure 203

ACFT TYPE		300 HOUR INSPECTION REQUIREMENTS	MECH	INSP
ALL	89	If no reddish-brown (iron oxide) stain is evident, the fuel pump may remain in service. **CAUTION:** DO NOT REMOVE THE FUEL PUMP COUPLING. REMOVAL MAY CAUSE CHIPPING OF THE SPLINES AND/OR LOSS OF THE CIRCLIP RETENTION. THE CIRCLIP ALLOWS VERY LIMITED MOVEMENT OF THE PUMP COUPLING.		
ALL	90	If a reddish-brown (iron oxide) stain is evident:		
		Remove fuel pump.		
		(b) Examine the input coupling shaft area of the pump face (Ref. Fig. 201) for residue from fretting corrosion (iron oxide deposit). If none is present, the pump may remain in service.		
		(c) Evidence of corrosion residue indicates possible spline wear. Return the fuel pump to an approved overhaul facility.		
		(d) Install a replacement fuel pump.		

Removal/Installation of Fuel Pump Filters
Figure 201

ACFT TYPE		300 HOUR INSPECTION REQUIREMENTS	MECH	INSP
ALL	91	Fuel Manifold: Inspect for evidence of fuel leaks and security of installation.		
ALL	92	Flow Divider: Inspect for fuel leaks and security of installation.		
ALL	93	Firewall Fuel Shutoff Control: Perform an operational check as instructed below.		

TITLE:	Firewall Fuel Shutoff Control Operational Check Procedure	MECH	INSP
INSPECTION INSTRUCTIONS	1. Operate the control to check for freedom of movement and positive engagement of the shutoff valve at the firewall.		
	2. With the firewall shutoff valve closed, open the drain valve on the firewall mounted fuel filter. Verify proper operation of the shutoff valve by checking that only a small amount of fuel flows from the filter drain valve.		

ACFT TYPE		300 HOUR INSPECTION REQUIREMENTS	MECH	INSP
ALL	94	P3 Filter: Clean and inspect for general condition.		
ALL	95	Fuel Control Unit: Inspect for fuel leaks and security of installation.		
ALL	96	Fuel Control Unit: Inspect for bearing washout (indicated by leakage of a mixture of blue dyed grease and fuel) at the FCU vent.		
ALL	97	FCU Manual Override: Perform FCU Manual Override System static check.		
ALL	98	Fuel Flow Transducer: Inspect for fuel leaks, evidence of damage and security of installation.		
ALL	99	Inspect spark igniters as instructed below.		
		(1) Inspect the exterior cylindrical area of the firing end of the igniter shell for chafing wear. Wear is acceptable to a depth of 0.015 inch.		
		(2) Inspect the igniter shell and electrode for erosion (Ref. Fig. 204 and Table 202). If erosion equals or exceeds amounts shown, reject the spark igniter.		
		(3) Do a functional test on acceptable and replacement spark igniters.		

CAUTION:
SHOULD AN IGNITER PLUG BE DROPPED, INTERNAL DAMAGE, POSSIBLY NOT DETECTABLE BY TEST, CAN OCCUR. RECOMMENDATION IS TO REPLACE THE IGNITER PLUG.

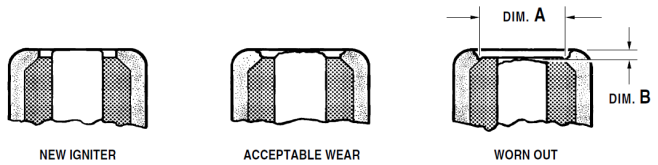

TABLE 202, Spark Igniter Erosion Limits

P&WC PART NO.	VENDOR NAME AND PART NO.	DIM. A (IN)	DIM. B (IN)
* 3014986	Champion: FHE-182	0.3437	0.0312
* 3024706	A.C.: 5611760	0.2750	0.1000
** 3027280	Champion: CH34055	0.3000	N/A
** 3031213	Bendix: 10-390667-1	0.3000	N/A

* Earlier parts supplied under ordering Part No. 3014981.

** Later parts supplied under ordering Part No. 3032096. Igniters eroded beyond limits should be replaced by latest part(s), if available.

DOI - KODIAK 100 SERIES - 300 HOUR INSPECTION

ACFT TYPE		300 HOUR INSPECTION REQUIREMENTS	MECH	INSP
ALL	100	Engine Controls: Check for proper operation, freedom of movement and that full range of motion is attained. Check that component stops are reached prior to the cockpit control stops. Inspect for security of installation, corrosion, wear, evidence of damage, proper routing and any deterioration.		
ALL	101	Engine and Propeller Control Linkages and Attach Brackets: Inspect for wear, corrosion, freedom of movement, security of installation and general condition.		
ALL	102	Engine Control Rod Ends: Inspect for corrosion, freedom of movement, and radial play. Lubricate the rod ends with LPS-1. * Engine Control Rod Ends must also be lubricated following each external engine wash.		
ALL	103	Engine Exhaust: Inspect ducts for cracks, distortion, evidence of damage, and security of installation.		
ALL	104	Oil Filter Element: Remove filter element and inspect for damage and debris. Clean filter.		
ALL	105	Oil Filler Cap and Dipstick: Inspect for proper condition and security of installation.		
ALL	106	Chip Detector Annunciation: Perform annunciation test (If Equipped).		
ALL	107	Oil Pressure Sensors: Inspect plumbing for leakage, condition and security of installation. Inspect the electrical connections for evidence of damage, condition and security of installation.		
ALL	108	Yaw Damper Actuation System: Inspect bridle cables for proper cable tension, chafing, fraying, general cleanliness, and proper routing. Inspect drive pulleys and guard pins for proper condition, abnormal wear, security of installation, and signs of corrosion. Inspect electrical components for proper operation, condition, and security of installation.		
ALL	109	Yaw Damper Actuator/Motor: Inspect for proper condition, security of installation, and signs of overheating.		
ALL	110	Autopilot Cutoff Relay (If Equipped): Inspect relay for security of installation, signs of electrical damage or other damage, and proper operation.		
ALL	111	Floor Coverings: Inspect for proper condition, security of installation, and cleanliness.		
ALL	112	Pilot, Copilot, and Passenger Restraints: Inspect pilot and copilot inertia reels for proper operation. Inspect pilot, copilot and passenger seat belts and shoulder harnesses for condition, frayed edges, signs of damage, and proper operation.		
ALL	113	Pilot, Copilot, and Passenger Seats: Inspect seat brackets, guides, and stops for security and condition. Inspect controls for security, condition and proper operation. Inspect the seat structure and seat cushions for proper condition and security. Service the seat position adjusting screws, bearings and locking mechanisms.		
ALL	114	Pilot and Copilot Seat Back Stop Mechanism: Inspect for loose or missing hardware and proper condition.		
ALL	115	Seat Rails: Inspect seat rails and stops for proper condition and security of installation. Inspect seat rail stops for proper location, security and installation. Clean and lubricate the crew seat rails with LPS 1.		
ALL	116	Cargo Tie-Down (If Equipped): Inspect for proper condition and security of installation.		
ALL	117	Cargo Net (If Equipped): Check for proper operation of adjusting mechanisms, proper condition, and security of installation.		
ALL	118	Portable Fire Extinguishers: Inspect for proper pressure, condition, and security of installation. Check required service date.		
ALL	119	Stall Warning Horn and Stall Warning Horn Relay: Inspect the warning horn and relay for proper condition, security of installation, and signs of damage. Inspect horn grill cover for proper condition and security of installation. (Ground check only.)		
ALL	120	Squat Switch (If Equipped): Inspect squat switch for proper operation, condition, security, and signs of damage.		
ALL	121	Stall Warning Computer (If Equipped): Inspect for security of attachment, damage, and proper operation.		
ALL	122	Control Column: Inspect control column assembly forward and aft of the instrument panel for condition and security of installation. Operate the control wheel in all directions while inspecting all moving components to verify proper operation and freedom of movement. Inspect bearing and wear surfaces for proper condition. Replace as needed.		
ALL	123	Rudder Pedals and Rudder Pedal Linkage: Inspect for proper condition and security of installation. Operate rudder pedals to verify freedom of movement and full range of travel.		
ALL	124	Electric Rudder Trim and Indicator: Inspect the trim system for proper condition and security of installation. Operate the trim to verify proper operation, freedom of movement and full range of motion. Check that the trim system contacts the limit switches prior to hitting the hard stops on the bungee collar. Verify the indicator functions properly.		

DOI - KODIAK 100 SERIES - 300 HOUR INSPECTION

ACFT TYPE		300 HOUR INSPECTION REQUIREMENTS	MECH	INSP
ALL	125	Flap Control System: Inspect the flap control lever for proper condition, security of installation, travel, and signs of damage.		
ALL	126	Instrument Panel Mounted Avionics Units and Instruments: (Includes the PFD's, MFD, audio panels, autopilot, magnetic compass, and standby instruments.) Inspect for deterioration, cracks and security of installation of units in instrument panel. Inspect for security of installation of electrical connections and proper routing of wiring.		
ALL	127	Instrument Panel Mounted Avionics Units: Clean as outlined in Section 8 of the POH/AFM.		
ALL	128	Radio and electronic equipment - for improper installation and insecure mounting.		
ALL	129	Wiring and conduits - for improper routing, insecure mounting, and obvious defects.		
ALL	130	Bonding and shielding - for improper installation and pooor condition.		
ALL	131	Antenna including trailing antenna - for poor condition, insecure mounting, and improper operation.		
ALL	132	Pitot and Static Drain Valves: Inspect for proper operation, security and signs of damage. Visually inspect for leaks and presence of water in valve. Drain any accumulated water.		
ALL	133	Control Pedestal Wiring: Inspect control pedestal components for proper electrical connections and terminals for proper condition and security of installation.		
ALL	134	Cargo Door Entrance Steps: Inspect for proper condition and security of installation. Lubricate the cargo door step hinge points with LPS 1.		
ALL	135	Main Fuselage Drain Holes: Inspect for corrosion and any obstructions.		
ALL	136	Windshield and Windows: Inspect for proper condition, security of installation and debond areas. Inspect pilot's storm window for proper operation and sealing.		
ALL	137	ELT: Inspect for security of installation, condition of electrical components and position of the function switch. Inspect the ELT structure for corrosion. Check cumulative time and useful life of battery in accordance with 14 CFR Part 91.207.		
ALL	138	NAV/COM/GPS/Avionics/ELT Antennas: Inspect for proper condition, cleanliness, and security of installation. Inspect for signs of damage or cracking.		
ALL	139	Rudder: Inspect the rudder hinges for cracks, proper condition, and security of installation. Inspect the hinge bolts, hinge bearings, hinge attach fittings, and bonding jumpers for evidence of damage or unusual wear. Inspect for failed fasteners and proper safetying of nuts with cotter pins. Inspect the rudder skins for cracks and loose rivets. Inspect balance weight for security and condition.		
ALL	140	Elevator: Inspect elevator skins for cracks, condition, and loose rivets; elevator hinges for condition, security, and cracks; and hinge bolts, hinge bearings, torque tube horn, attach fittings, and bonding jumpers for evidence of damage or unusual wear, failed fasteners, and security of installation. Inspect elevator hinge bolts for proper safetying of nut with cotter pins. Inspect supporting structure for signs of damage. Inspect balance weights for security and condition.		
ALL	141	Elevator Trim Tabs: Inspect the trim tab skins for cracks, loose rivets, and security of installation. Inspect the trim tab hinge for security, cracks, and corrosion. Inspect the hinge pin for properly centered installation. Inspect the pushrods for security and any signs of damage. Inspect the pushrod bolts for proper condition and safetying of nuts with cotter pins. Lubricate the trim tab piano hinges with LPS 1.		
ALL	142	Vertical and Horizontal Stabilizers: Inspect the structures and their attach points for security and condition. Inspect vortex generators for condition and security.		
ALL	143	Flight Control Systems Rod End Connections: Check for proper condition and freedom of movement. Lubricate with LPS 1.		
ALL	144	Ailerons: Inspect aileron hinges for proper condition, cracks, and security of installation. Inspect the hinge bolts, hinge bearings, hinge attach fittings, and bonding jumpers for evidence of damage, unusual wear, failed fasteners, and security of installation. Inspect the aileron skins for cracks and loose rivets. Inspect balance weights for security and condition.		
ALL	145	Aileron Trim Tab: Inspect the trim tab skin for cracks, loose rivets, and security of installation; trim tab hinges for security of installation and signs of damage; hinge pin for proper installation in hinge pin retainer; horn and pushrod for signs of damage and security of installation; pushrod bolts for proper condition and proper safetying of nuts with cotter pins.		
ALL	146	Elevator Cables (Fuselage): Inspect cables for chafing, cleanliness, proper routing and turnbuckle safetying. Inspect pulleys and cable guards for wear, proper condition and security of installation. Rotate pulleys to reposition them relative to the cable, allowing for even wear on pulley.		

DOI - KODIAK 100 SERIES - 300 HOUR INSPECTION

ACFT TYPE		300 HOUR INSPECTION REQUIREMENTS	MECH	INSP
ALL	147	Flap Actuator Assemblies and Flap Gap Seals (Wing): Inspect for proper condition and security of installation of the wing flexible shafts. Inspect the flap actuator support structures for proper condition and security of installation. Inspect the fuselage gap seal assemblies for security and condition.		
ALL	148	Wing Fuel Tanks: Inspect for fuel stains or any evidence of fuel leaks. Check drain/vent holes in the lower wing skins just outboard of the wing tanks for signs of leakage and for cleanliness.		
ALL	149	Fuel Tank Filler Caps and Flapper Valves: Inspect for broken components or other damage. Check filler cap locking position and security of installation.		
ALL	150	Fuel Drain Valves: Check for proper operation and inspect for corrosion, leakage and proper sealing action.		
ALL	151	Fuel Selector Valves and Linkages: In the wing root area, inspect shutoff valves, controls and linkages for security, condition and signs of damage.		
ALL	152	Fuel Vent Lines (Wings): Inspect for signs of damage, obstructions, and cleanliness.		
ALL	153	Pitot/Static Tubes: Visually inspect tubes and static ports for obstructions. Inspect pitot masts for damage, security, and general condition.		
ALL	154	Stall Warning Lift Sensor (Vane-type or Lift Transducer, as equipped): Inspect for proper condition and security of installation.		
ALL	155	Wing Access Panels: Inspect for signs of damage and security of installation.		
ALL	156	Main Landing Gear System: Inspect for general condition and security. Check that there is no freeplay between the landing gear legs and trunnion. Check for security of nuts and cotter pin placement on trunnion mounting studs. Check for proper condition and any signs of damage at trunnion and gear legs. Lubricate the trunnion assemblies with Aeroshell Grease 22. ****Caution** DO NOT** pump more than three pumps of grease in the end caps. Inserting excessive amounts of grease into the end caps will pressurize the end caps which can damage the surrounding structure.		
ALL	157	Nose Gear Shock Strut: Inspect for evidence of leakage and proper extension. Service as necessary. Inspect strut barrel for pitting and corrosion. Inspect for general condition and cleanliness. Wipe the nose strut chrome tube with a cloth lightly damp with MIL-H-5606 hydraulic fluid.		
ALL	158	Brake Lines and Plumbing: Inspect all lines for leaks. Inspect flexible hoses for bulges, deterioration, twists and kinks. Inspect rigid tubing for proper condition, security of installation and routing.		
ALL	159	Brake Assemblies: Check brake lining wear, check disk for proper condition and any warping. Inspect for signs of leakage. Conduct inspection as instructed below.		

TITLE:	Brake Inspection	MECH	INSP
INSPECTION INSTRUCTIONS	1. Disassemble the brake as instructed in applicable Kodiak Manual.		
	2. Inspect the brake linings for deterioration. Ensure the wear is within the limits.		
	3. Replace the brake linings if worn to 0.100 inch or less.		
	4. Inspect the brake cylinder bores for signs of scoring and deterioration. Replace the cylinder assembly if the cylinders are scored.		
	5. Replace all packings, back-up rings, and O-rings when reassembling the brakes.		
	6. Reassemble the brake as instructed in applicable Kodiak Manual.		

ACFT TYPE		300 HOUR INSPECTION REQUIREMENTS	MECH	INSP
ALL	160	Nose Landing Gear Tire and Wheel: Inspect for proper inflation pressure, wear and condition of tire. Inspect wheel for security of installation and condition.		
ALL	161	Main Landing Gear Tires and Wheels: Inspect for proper inflation pressure, wear, and condition of tire. Inspect wheel for security of installation and condition.		
ALL	162	Shimmy Damper: Inspect for proper condition, security, and signs of leakage (if applicable). Lubricate the shimmy damper pivot points with LPS 1.		
ALL	163	Steering Bungee: Check for the security of threaded rod end into the bungee housing. Check for the security of the band clamp securing the steering bungee and the bungee adjuster. Lubricate the rod end with LPS 1.		

DOI - KODIAK 100 SERIES - 300 HOUR INSPECTION

ACFT TYPE		300 HOUR INSPECTION REQUIREMENTS	MECH	INSP
ALL	164	Perform a transient voltage suppressor inspection (if GFC 700 equipped) as instructed below.		
TITLE:		Transient Voltage Suppressor Inspection		

		MECH	INSP
INSPECTION INSTRUCTIONS	**WARNING:** Damage can occur to the GRS or GMU if insulation resistance voltage is applied to the GRS or GMU.		
	A. Place the master switch in the OFF position.		
	B. Disconnect the following connectors from the associated equipment.		
	1. 1P771 from GRS77 #1		
	2. 2P771 from GRS77 #2		
	3. P501 from RH wing root		
	4. P601 from LH wing root		
	5. 1P441 from GMU44 #1		
	6. 2P441 from GMU44 #2		
	C. Conduct insulation resistance tests.		
	1. Configure the insulation tester for a 50 volt test and measure the insulation resistance between the following pins. Measured insulation resistance must be greater than 40 Meg Ohms.		
	a. GRS77 #1, connector 1P771 pins 9 and 40		
	b. GRS77 #2, connector 2P771 pins 9 and 40		
	c. GMU44 #1, connector 1P441 pins 9 and 6		
	d. GMU44 #2, connector 2P441 pins 9 and 6		
	2. Configure the insulation tester for a 100 volt test and measure the insulation resistance between the following pins. Measured insulation resistance must be less than 0.200 Meg Ohms.		
	a. GRS77 #1, connector 1P771 pins 9 and 40		
	b. GRS77 #2, connector 2P771 pins 9 and 40		
	c. GMU44 #1, connector 1P441 pins 9 and 6		
	d. GMU44 #2, connector 2P441 pins 9 and 6		
	D. Replace any TVS units that fail either resistance test. See appropriate Kodiak Manual.		
	E. After all TVS devices satisfy the inspection requirements, reconnect the following connectors to the associated equipment.		
	1. 1P771 to GRS77 #1		
	2. 2P771 to GRS77 #2		
	3. P501 to RH wing root		
	4. P601 to LH wing root		
	5. 1P441 to GMU44 #1		
	6. 2P441 to GMU44 #2		

DOI - KODIAK 100 SERIES - 300 HOUR INSPECTION

ACFT TYPE		300 HOUR INSPECTION REQUIREMENTS	MECH	INSP
ALL	165	Perform a lightening protection resistor inspection (if GFC 700 equipped) as instructed below.		
TITLE:		Lightening Protection Resistor Inspection		

		MECH	INSP
INSPECTION INSTRUCTIONS	A. Place the Master switch in the OFF position		
	B. Disconnect the following connectors from the associated equipment		
	1. 1P771 from GRS 77 #1		
	2. P601 from J601		
	3. 2P771 from GRS 77 #2		
	4. P501 from J501		
	5. 1P603 from GIA #1		
	6. 2P603 from GIA #2		
	7. 4P801 from Pitch Trim Servo		
	8. 2P801 from Roll Servo		
	9. 1P441 from GMU #1		
	10. 2P441 from GMU #2		
	C. Conduct resistance tests.		
	NOTE: Subtract out the resistance of the test leads.		
	1. Measure resistance between GRS #1 connector 1P771 pin 10 and connector P601 pin M. Resistance should be between 2.2 ohms and 3.4 ohms.		
	2. Measure resistance between GRS #2 connector 2P771 pin 10 and P501 pin D (SN 100-0120 and up) or pin 4 (SN 100-0001 - SN 100-0119). Resistance should be between 2.2 ohms and 3.4 ohms.		
	3. Measure resistance between connector 1P603 pin 4 and connector P601 pin U. Resistance should be between 3.2 ohms and 4.5 ohms.		
	4. Measure resistance between connector 1P603 pin 6 and connector P601 pin Y. Resistance should be between 3.2 ohms and 4.5 ohms.		
	5. Measure resistance between connector 2P603 pin 4 and connector P601 pin GG. Resistance should be between 3.2 ohms and 4.5 ohms.		
	6. Measure resistance between connector 2P603 pin 6 and connector P601 pin HH. Resistance should be between 3.2 ohms and 4.5 ohms.		
	7. Measure resistance between connector 4P801 pin J and connector P601 pin U. Resistance should be between 3.4 ohms and 4.7 ohms.		
	8. Measure resistance between connector 4P801 pin T and connector P601 pin Y. Resistance should be between 3.4 ohms and 4.7 ohms.		
	9. Measure resistance between connector 4P801 pin S and connector P601 pin GG. Resistance should be between 3.4 ohms and 4.7 ohms.		
	10. Measure resistance between connector 4P801 pin E and connector P601 pin HH. Resistance should be between 3.4 ohms and 4.7 ohms.		
	11. Measure resistance between connector 2P801 pin J and connector J601 pin U. Resistance should be between 3.1 ohms and 4.4 ohms.		
	12. Measure resistance between connector 2P801 pin T and connector J601 pin Y. Resistance should be between 3.1 ohms and 4.4 ohms.		
	13. Measure resistance between connector 2P801 pin S and connector J601 pin GG. Resistance should be between 3.1 ohms and 4.4 ohms.		
	14. Measure resistance between connector 2P801 pin E and connector J601 pin HH. Resistance should be between 3.1 ohms and 4.4 ohms.		
	15. Measure resistance between connector 1P441 pin 4 and connector J601 pin L. Resistance should be between 2.2 ohms and 3.4 ohms.		

	MECH	INSP
16. Measure resistance between connector 1P441 pin 2 and connector J601 pin S. Resistance should be between 2.2 ohms and 3.4 ohms.		
17. Measure resistance between connector 1P441 pin 8 and connector J601 pin M. Resistance should be between 2.2 ohms and 3.4 ohms.		
18. Measure resistance between connector 2P441 pin 4 and connector J501 pin L. Resistance should be between 2.2 ohms and 3.4 ohms.		
19. Measure resistance between connector 2P441 pin 2 and connector J501 pin S. Resistance should be between 2.2 ohms and 3.4 ohms.		
20. Measure resistance between connector 2P441 pin 8 and connector J501 pin D (SN 100-0120 and up) or pin 4 (SN 100-0001 - SN 100-0119). Resistance should be between 2.2 ohms and 3.4 ohms.		

ACFT TYPE		300 HOUR INSPECTION REQUIREMENTS	MECH	INSP
ALL	166	Inspect each installed miscellaneous item that is not otherwise covered by this listing for improper installation and improper operation.		

ACFT TYPE		300 HOUR INSPECTION REQUIREMENTS TKS ICE PROTECTION SYSTEM INSPECTION	MECH	INSP
ALL	167	Porous Panels and Windshield Nozzles - Inspect for proper condition and security.		
ALL	168	Porous Panels and Windshield Nozzles - Operate system to check for even flow from all panels. Inspect for leaks from sealed areas.		
ALL	169	Propeller Slinger - Inspect for proper condition and security of installation. Check fluid lines for leaks with the system operating. Check for proper routing/aim of nozzles. Ensure the fluid is discharging into ring from nozzle fitted at front of engine.		
ALL	170	Propeller Nozzle (Aircraft to Propeller Slinger) - Inspect that nozzle is positioned to direct a stream of fluid into propeller slinger with system operating on HIGH.		
ALL	171	Ice Inspection Lights - Inspect lights and electrical connections for proper operation and security of installation. Ensure that the orientation of the ice lights provide adequate illumination of the wings' leading edge.		
ALL	172	Stall Warning Lift Transducer Heat Check - Perform inspection as instructed below.		
TITLE:		Lift Transducer Functional Heat Test		

		MECH	INSP
INSPECTION INSTRUCTIONS	**CAUTION:** On airplanes equipped with a heated lift transducer, the lift transducer and the area around the lift transducer may be hot enough to instantly burn skin, burn or melt clothing and or objects touching it. Do not touch the lift transducer or surrounding area until it has cooled.		
	CAUTION: The heaters will quickly overheat in "Air" mode. Only allow five seconds MAX to perform the test.		
	1. Ensure left pitot cover is removed.		
	2. Apply ground power to the airplane.		
	3. Move the MASTER switch to ON.		
	4. Move the left Pitot Heat switch to ON.		
	5. Allow 5 minutes for heating element to reach equilibrium.		
	6. Use an infrared thermometer to verify the lift transducer vane and mounting plate are hot and mounting plate measures > 100º.		
	7. Set the aircraft in "Air" mode.		
	NOTE: Set the aircraft in "Air" mode by removing the floorboards and depressing the Weight-On-Wheels plunger.		
	8. Allow 5 seconds only for heating element to show temperature increase.		
	CAUTION: The heaters will quickly overheat in "Air" mode. Only allow five seconds MAX to perform the test.		
	9. Use an infrared thermometer to verify the lift transducer vane and mounting plate increase in temperature.		
	10. Remove aircraft from "Air" mode.		

	MECH	INSP
11. Move the left Pitot Heat switch to OFF.		
12. Move the MASTER switch to OFF.		
13. Remove ground power to the airplane.		
14. Replace left pitot cover.		

ACFT TYPE		SUPPLEMENTAL 300 HOUR INSPECTION REQUIREMENTS EXTERNAL CARGO COMPARTMENT INSPECTION	MECH	INSP
ALL	173	EPA and Oil Drain Sump Cans: (If Equipped) Inspect can for leakage, condition, and security of installation. Completely drain can.		
ALL	174	External Cargo Compartment Fuel Drain Lines - Check drain lines and valves for evidence of leakage and proper operation.		

ACFT TYPE		SUPPLEMENTAL 300 HOUR INSPECTION REQUIREMENTS GARMIN GWX 68 WEATHER RADAR INSPECTION	MECH	INSP
ALL	175	Radome and Radome/Wing Attachment (If Equipped): Inspect for security of installation and proper condition. Ensure that there are no cracks in the dome, mount, or reinforcement.		
ALL	176	Wing Skin at attach Point (If Equipped): Inspect for security of installation and proper condition. Ensure that the UHMW tape is installed between the mount/wing skin and reinforcement/wing skin.		

ACFT TYPE		300 HOUR INSPECTION REQUIREMENTS	MECH	INSP
ALL	177	Compressor Wash: Inspect wash ring for condition and security of installation. Perform a compressor wash.		
TITLE:		Turbine Blade Wash Procedures		

		MECH	INSP
INSPECTION INSTRUCTIONS	**NOTE:** Adhere to the following starter limitations for motoring the engine.		

Starter Options	Time ON	Time OFF
Lo/Motor	30 seconds	60 seconds
Lo/Motor	30 seconds	60 seconds
Lo/Motor	30 seconds	30 minutes

	MECH	INSP
NOTE: A minimum cool-down period of 40 minutes is recommended after engine running before injecting rinse fluid.		
NOTE: Compressor turbine blade washing is to be accomplished using potable water only at an ambient temperature of above 36°F. A potable water/methanol solution may be used with ambient temperatures below 36°F. See the P&W Maintenance Manual for appropriate solution strengths with varying ambient temperatures.		
1. Remove upper and lower forward cowlings.		
2. Place a suitable pan beneath the engine to recover wash solution.		
3. Remove one of the two igniter plugs.		
4. Install spray tube P/N PWC32271 in the igniter plug boss and tighten spray tube finger tight. Make sure the arrow on the tab of the spray tube is directed toward the propeller reduction gearbox and is parallel with the engine centerline.		
CAUTION: The cleaning solution supply hose should be supported in order to prevent damage to the spray tube.		
5. Connect a hose from a suitable cleaning rig to the spray adapter. The water/solution mixture should be delivered to the engine at 40 psi.		
6. Verify the engine ignition switch and engine bleed air is in the OFF position.		
7. Begin motoring the engine with the starter for 30 seconds; when the NG reaches 5%, introduce the wash solution to the engine.		
NOTE: Approximately ½ gallon of rinse solution will be consumed through the compressor turbine during a 30-second cycle.		

DOI - KODIAK 100 SERIES - 300 HOUR INSPECTION

	MECH	INSP
CAUTION: When using a water/methanol solution, perform an additional 30 seconds of dry motoring after each washing cycle to purge the engine of the volatile methanol fumes. Make sure recommended starter cooling periods of 40 minutes is observed.		
8. Repeat the washing cycle as required to remove contaminants from the turbine blades.		
9. Remove the spray tube assembly and reinstall the igniter plug.		
10. Perform two consecutive dry motoring runs while making sure the starter motoring limitations are not exceeded.		
11. Reinstall all engine cowlings.		

DOI - KODIAK 100 SERIES - 300 HOUR INSPECTIONS

ZONE	ACFT TYPE		SUPPLEMENTAL 300 HOUR INSPECTION REQUIREMENTS	MECH	INSP
ARCTIC	ALL	178	Floats - Inspect as required by OEM ICAs.		
ARCTIC	ALL	179	Skis - Inspect as required by OEM ICAs.		
ARCTIC	ALL	180	De-ice/Anti-ice System - Inspect as required by OEM ICAs.		
ARCTIC		181			
ARCTIC		182			
ARCTIC		183			
ARCTIC		184			
ARCTIC		185			
ARCTIC		186			
ARCTIC		187			
ARCTIC		188			
ARCTIC		189			
ARCTIC		190			
ARCTIC		191			
TEMPERATE	ALL	192	Floats - Inspect as required by OEM ICAs.		
TEMPERATE	ALL	193	Skis - Inspect as required by OEM ICAs.		
TEMPERATE	ALL	194	De-ice/Anti-ice System - Inspect as required by OEM ICAs.		
TEMPERATE		195			
TEMPERATE		196			
TEMPERATE		197			
TEMPERATE		198			
TEMPERATE		199			
TEMPERATE		200			
TEMPERATE		201			
TEMPERATE		202			
TEMPERATE		203			
TEMPERATE		204			
TEMPERATE		205			
	ALL	206	All panels opened for the inspection are closed and secure.		
	ALL	207	Run aircraft engine and leak check.		

DOI - KODIAK 100 SERIES - 300 HOUR INSPECTIONS

NOTES:

ASSURE PROPER MAINTENANCE RECORD ENTRIES HAVE BEEN MADE IAW 14 CFR 43.9

THE AIRCRAFT RECORDS CONSIST OF THE FOLLOWING;

1. AIRCRAFT, ENGINE & PROPELLER HARD LOGS.
2. ALL FORM 337'S, MAJOR REPAIR & ALTERATION.
3. COMPLIANCE LIST OF ALL PERTINENT AIRWORTHINESS DIRECTIVES.
4. MAINTENANCE SCHEDULE- LIST OF REQUIRED SPECIAL INSPECTIONS, COMPONENT OVERHAUL & TIME-LIFE LIMITS.
5. CURRENT & HISTORICAL WEIGHT & BALANCE STATUS & EQUIPMENT LIST
7. MINIMUM EQUIPMENT LIST AS REQUIRED.
8. SPECIAL FLIGHT AUTHORIZATIONS AND/OR SUPPLEMENTS

UNITED STATES DEPARTMENT OF THE INTERIOR

KODIAK 100 SERIES

400 HOUR SCHEDULED MAINTENANCE CHECKS

THE INSPECTION WORK SHEETS / PACKAGES IN THIS DOCUMENT ARE FOR THE 'UNITED STATES DEPARTMENT OF THE INTERIOR' AIRCRAFT ONLY.

Inspection Sheet - Block Explanation

Example

ACFT TYPE		EXAMPLE INSPECTION REQUIREMENTS	MECH	INSP
ALL	1	PY and P3 Line Heater Check: Perform an operational check of PY and P3 heaters.		
ALL	2	Conduct engine run-up checks as described below.		
ALL	3	EPA and Oil Drain Sump Cans: (If Equipped) Inspect can for leakage, condition, and security of installation. Completely drain can.	N/A	
A	**B**	**C**	**D**	**E**

Block A All - All Kodiak 100 Series aircraft.

Block B Each inspection and task is given a line item number in the 2nd column.

Block C Describes inspection tasks.

Block D Mechanic sign-off block.
N/A (Not Applicable) - should be used if the inspection cannot or should not be carried out due to (but not limited to) -

1. Serial number range.
2. Unit or option not installed on aircraft.
3. Previously complied with.
4. Climate zone applicability.

A note beside the N/A to indicate the reason for it is recommended.

Block E
The (white) INSP block should be initialed by an inspector who witnessed the task carried out by the mechanic and completed a final inspection and/or functional check in accordance with the line item requirements and relevant technical publications. The inspector shall not initial the INSP block until after the mechanic has initialed the MECH block. In a block that requires a Maintenance Inspector, he shall initial the white INSP block whenever N/A has been entered in the MECH block.

Climate Zone Supplemental Inspections and Servicing

Before commencing inspection and servicing, it must be confirmed which climate zone the subject aircraft is operated in. If the aircraft is above the 49th parallel it is in the Arctic Zone. If the aircraft is below the 49th parallel it is in the Temperate zone. The extra line items listed for the appropriate climate zone shall be added to the servicing, the not applicable climate zone line items shall be noted as N/A in the sign-off block.

Inspections: To be completed in accordance with this manual.

Repairs: To be completed in accordance with the appropriate Kodiak Maintenance Manual.

Acronyms in use

SID - Supplemental Inspection Document

CPCP - Corrosion Prevention and Control Program

NDI - Non Destructive Inspection

ICA - Inspection for Continued Airworthiness

STC - Supplemental Type Certificate

PSE - Principle Structural Element

N/A - Not Applicable (see MECH Block D above)

OEM - Original Equipment Manufacturer

IAW - In Accordance With

DOI - KODIAK 100 SERIES - 400 HOUR INSPECTION

'N' NUMBER:_____ MODEL: _____ AIRCRAFT S/N:_____

TACH HOURS:_____ AIRCRAFT TOTAL TIME:_____ ENG. SMOH:_____ PROP SMOH:_____

ACFT TYPE		400 HOUR INSPECTION REQUIREMENTS	MECH	INSP
ALL	1	Remove cowling, inspection plates, and all fairings as necessary to perform the inspections called for on this form. Thoroughly clean the aircraft and engine.		

TITLE:	Window and windshield Cleaning Procedures	MECH	INSP
INSPECTION INSTRUCTIONS	**CAUTION:** Windows and windshields are easily damaged if handled improperly.		
	1. Position the aircraft inside a hangar or another suitable location to allow the aircraft surface to remain cool and out of direct sunlight.		
	2. Flood the window with clean water and feel by hand (jewelry removed) for potentially abrasive materials on the window surface.		
	3. Remove any abrasive matter from window surface by hand.		
	4. Wash the window surface with mild soap or detergent mixed with water. A clean cotton cloth may be used to transfer the soapy solution to the window surface but use extreme care to prevent scratching of the window surface.		
	5. If the contaminants on the surface of the window cannot be removed by the solution of mild soap and water, Type II Aliphatic Naphtha may be used as a cleaning agent. Apply the Type II Aliphatic Naphtha with a soft clean cotton cloth, and frequently refold the cloth to avoid scratching the windshield with any abrasive particles.		
	6. Rinse the window surface thoroughly with clean water and dry with a clean cotton cloth.		
	7. Hard polishing wax may be applied to the acrylic window surfaces using a clean soft cotton cloth. The polishing wax will mask most shallow scratches on the window surface.		

TITLE:	Aluminum Surface Cleaning Procedures	MECH	INSP
INSPECTION INSTRUCTIONS	Aluminum surfaces do not require extensive maintenance, but should not be neglected. The aircraft should be washed with clean water in order to remove any collected dirt. Non-alkaline grease solvents may be used to aide in the removal of oil and grease. There are various commercial grade cleaners available for aluminum surfaces.		

TITLE:	External Painted Surface Cleaning Procedures	MECH	INSP
INSPECTION INSTRUCTIONS	A. The painted surfaces on the aircraft can normally be kept bright by washing with a solution of soap and water, followed by a water-rinsing and then dried off with a clean dry cloth or chamois. Abrasive soaps or detergents should never be used due to their tendency to cause corrosion. Stubborn oil or grease spots can be removed with a cloth moistened with Stoddard solvent. Follow any cleaning procedure with a thorough rinse of the aircraft.		
	CAUTION: If equipped with the TKS Ice Protection System, don't polish the surface of the porous panels. Polish on the porous panels impairs the wetting qualities of the TKS and may degrade ice protection efficiency. Polishing may also block pores in the panels. See the TKS Ice Protection System Instructions for Continued Airworthiness.		
	B. To seal any minor scratches or chips and to protect the aircraft skins against corrosion, the aircraft should be waxed on a regular basis. A quality grade automotive wax containing a carnauba base should be used, and should be applied in accordance with the manufacturer's instructions. If the aircraft is operated around coastal waters or other salt water environments, it must be washed and waxed on a more frequent basis to help fight corrosion. Special attention should be given to protect and seal around the rivet heads, skin laps, piano hinges, and any other area susceptible to corrosion. A heavier coating of wax should be applied on the wing and tail leading edges, the engine cowling nose area, and the propeller spinner to help reduce abrasive wear in these areas. However, don't polish or wax porous panels on the leading edges of airplanes equipped with the TKS Ice Protection System. (See caution above.) Wax should be reapplied after cleaning the aircraft.		

TITLE:	Engine Compartment Cleaning	MECH	INSP
INSPECTION INSTRUCTIONS	A. Washing of the engine and its accessories should be accomplished routinely in order to remove oil, grease, corrosive salts, and other residue. A periodic cleaning should be accomplished during inspection periods to aid in discovering defects.		

	MECH	INSP
B. Protective equipment and clothing such as, a face shield, coveralls, and chemically-resistant gloves should be worn when working with strong cleaning agents. Use the least toxic cleaning agent that will effectively accomplish the task at hand.		
CAUTION: Cover the aircraft's propeller in order to prevent any alkaline cleaner from coming in contact with it during washing procedures.		
CAUTION: Do not use gasoline or other highly flammable materials for washing the aircraft or any of its components.		
CAUTION: Do not wash the engine while it is still hot or while it is running. Allow the engine to cool down prior to cleaning.		
C. Cleaning procedures should be performed in a well-ventilated area and fire fighting equipment should be readily available. No smoking and no open flames should be allowed within a 100 foot radius of the cleaning area. Compressed air should be set at the lowest effective pressure for use in drying, or as a cleaning agent. Steel wire brushes should not be used for cleaning the aircraft; a stiff, nylon or similar bristle brush may be used if one is needed to remove grease and grime.		

ACFT TYPE		**400 HOUR INSPECTION REQUIREMENTS**	MECH	INSP
ALL	2	Conduct engine run-up checks as instructed below.		
TITLE:		Engine Run-up Checks and Tests		

		MECH	INSP
INSPECTION INSTRUCTIONS	A. The following checklist is provided for performing engine run-ups for routine maintenance and inspection procedures.		
	CAUTION: Start and operate the engine per the Pilot's Operating Handbook/FAA Approved Flight Manual. Observe all power plant operating limitations.		
	NOTE: Refer to applicable Kodiak Manual for the Ground Performance Check Chart for the PT6A-34 engine.		

Reservoir Fuel Low/Fuel Selectors OFF Warning Test						
Control	Position	X	Results			
Engine	Start (IAW POH/AFM)					
Aux Buss	OFF					
Power Lever	IDLE					
Propeller Lever	MAX RPM					
Condition Lever	LOW IDLE					
Auxiliary Fuel Pump	ON					
Fuel Selector Controls	BOTH OFF		and Check:	Y	N	Comments:
			Fuel Selectors OFF Warning light above PFD1 Illuminates			
			Audible Chime Heard			
			FUEL OFF annunciator shown on PFD			
			RESERVOIR FUEL annunciator shown on PFD when fuel level in reservoir decreases			Delay no more than 10 minutes. **NOTE:** Continue with checklist while waiting for annunciator to appear.
Fuel Selector Controls	BOTH ON					

	MECH	INSP
Initials:		

DOI - KODIAK 100 SERIES - 400 HOUR INSPECTION

Electrical Power Check								
Control/System	Position/Condition	X	Results					
Power Lever	IDLE							
Propeller Lever	MAX RPM							
Condition Lever	LOW IDLE							
Generator	ON							
Alternator	ON		and Check:	Y	N	Comments:		
			Note Alternator Amps					
			Note Generator Amps					
Left Pitot Heat	ON		and Check:	Y	N	Comments:		
			Alternator amps increase with applied load					
Right Pitot Heat	ON		and Check:	Y	N	Comments:		
			Generator amps increase with applied load					
			Check M Bus: 27.0V-28.2V				MECH	INSP
						Initials:		

Electrical Power Check								
Control/System	Position/Condition	X	Results					
Generator	OFF		and Check:	Y	N	Comments:		
			Alternator and batteries carry entire electrical load.					
			GEN FAIL annunciator shown on PFD					
			M Bus: 24-25.5V (Depending on battery voltage)					
			E Bus: 28.3-29.1 V					
Generator	ON							
Alternator	OFF		and Check:	Y	N	Comments:		
			Generator carries entire electrical load.					
			ALTERNATOR FL annunciator shown on PFD					
			M Bus: 27.0-28.2 V					
			E Bus: Approx.. 1 V less than Bus M volts					
Generator & Alternator	OFF		and Check:	Y	N	Comments:		
			Batteries carry entire electrical load					
			ALTERNATOR FL annunciator shown on PFD					
			GEN FAIL annunciator shown on PFD					
Generator	ON							
Alternator	ON						MECH	INSP
						Initials:		

DOI - KODIAK 100 SERIES - 400 HOUR INSPECTION

Engine Idle Check								
Control/System	Position/Condition	X	Results					
Power Lever	IDLE							
Propeller Lever	MAX RPM							
Condition Lever	LOW IDLE		and Check:	Y	N	Comments:		
			Electrical Load approx. 50 amps					
			Ng speed 52.5-55.5%					
Condition Lever	HIGH IDLE		and Check:	Y	N	Comments:		
			Ng speed 68-72%				MECH	INSP
						Initials:		

Propeller Governor Operational Check								
Control/System	Position/Condition	X	Results					
Propeller Lever	MAX RPM							
Condition Lever	LOW IDLE							
Power Lever	ADVANCE until Np stabilizes at 2200 RPM +0/-10 RPM							
Power Lever	ADVANCE 10% Ng		and Check:	Y	N	Comments:		
			Np stabilizes at 2200 RPM					
Power Lever	IDLE							
Propeller Lever	LOW RPM							
Power Lever	ADVANCE until Np stabilizes at approximately 1900-2030 RMP							
Power Lever	ADVANCE 10% Ng		and Check:	Y	N	Comments:		
			Np stabilizes at 1900-2030 RPM					
Power Lever	IDLE							
Propeller Lever	MAX RPM						MECH	INSP
						Initials:		

Propeller Overspeed Governor Operational Check								
Control/System	Position/Condition	X	Results					
Propeller Lever	MAX RPM							
Overspeed Governor Test Switch	Press and Hold							
Power Lever	ADVANCE until Np stabilizes at 2070 RPM +/- 50 RPM							
Power Lever	ADVANCE Ng 10%		and Check:	Y	N	Comments:		
			Np stabilizes at 1900-2030 RPM					
Power Lever	IDLE							
Overspeed Governor Test Switch	Release							
Power Lever	ADVANCE		and Check:	Y	N	Comments:		
			Governor Limits to 2200 RPM				MECH	INSP
						Initials:		

DOI - KODIAK 100 SERIES - 400 HOUR INSPECTION

Power Lever Reverse Ng Speed Pickup Check								
Control/System	Position/Condition	X	Results					
Propeller Lever	MAX RPM							
Condition Lever	HIGH IDLE		and Check:	Y	N	Comments:		
			Note Np RPM					
			Note Ng %					
Power Lever	Move slowly to BETA Range		and Check:	Y	N	Comments:		
			Note Np RPM					
			Note Ng %					
Power Lever	MAX REVERSE		and Check:	Y	N	Comments:		
			Max reverse torque is a minimum of 700 ft. lbs.					
			Propeller RPM does not exceed 2100 RPM					
Power Lever	IDLE		and Check:	Y	N	Comments:	MECH	INSP
						Initials:		

Emergency Power Lever Annunciator Test								
Control/System	Position/Condition	X	Results					
Power Lever	IDLE							
Propeller Lever	MAX RPM							
Condition Lever	LOW IDLE							
Emergency Power Lever	Slowly ADVANCE		and Check:	Y	N	Comments:		
			ITT, TRQ, and Ng limits at all time					
			Keep Ng increase at less than 4% per sec.					
			EMER PWR LVR annunciator shown on PFD					
Emergency Power Lever	SLOWLY increase Ng to 67% Ng							
Emergency Power Lever	SLOWLY reduce to NORMAL (Full Aft)		and Check:	Y	N	Comments:		
			Keep Ng decrease at less than 4% per sec.					
			EMER PWR LVR annunciator extinguishes				MECH	INSP
						Initials:		

ACFT TYPE		**400 HOUR INSPECTION REQUIREMENTS**	MECH	INSP
ALL	3	Inspect three (3) Blade Hartzel Propellers as instructed below.		
		Remove the spinner dome.		
		Visually inspect the entire blade for nicks and cracks. If any damage is discovered, refer to appropriate manual for further instructions.		
		A cracked blade must be referred to an appropriately licensed propeller repair facility.		
		Inspect all visible propeller parts for cracks, wear, or unsafe conditions.		
		Check for oil and grease leaks. Refer to appropriate manual for further instructions.		
		If a blade track problem is suspected, check the blade track. Refer to appropriate manual for further instructions.		
		Make an entry in the log book verifying this inspection.		

DOI - KODIAK 100 SERIES - 400 HOUR INSPECTION

ACFT TYPE		400 HOUR INSPECTION REQUIREMENTS	MECH	INSP
ALL	4	Inspect four (4) Blade Hartzel Propellers as instructed below.		
		Remove the spinner.		
		Visually inspect the blades for nicks and cracks. If any damage is discovered, refer to appropriate manual for further instructions.		
		Inspect all visible propeller parts for cracks, wear or unsafe conditions.		
		Check for oil and grease leaks. Refer to appropriate manual for further instructions.		
		If a blade track problem is suspected, check the blade track. Refer to appropriate manual for further instructions.		
		Check preload plate set screw. Refer to appropriate manual for further instructions.		
		Make an entry in the log book verifying the inspections.		

ACFT TYPE		400 HOUR INSPECTION REQUIREMENTS	MECH	INSP
ALL	5	Engine Inlet and Inertial Air Particle Separator (as equipped, either with Single-actuated or Dualactuated): Inspect for security of installation, condition and proper freedom of movement while accomplishing an operational check. Inspect door pivot points for proper condition. Check actuator(s) and linkage for proper operation and freedom of movement. Check for full opening of bypass door through inlet duct. Lubricate the separator actuators with LPS 1.		
ALL	6	PY and P3 Line Heater Check: Perform an operational check of PY and P3 heaters.		
ALL	7	Igniters: Perform an operational check by turning on the master switch and ignition switch while verifying illumination of the IGNITION ON annunciator and proper function of both igniters.		
ALL	8	External Power System: Perform an operational test of the bus and starter functions while using external power in accordance with the POH/AFM.		
ALL	9	Flaps - Trim Compensation Unit Check: Perform a Pitch Trim Compensation Unit Functional Check.		
ALL	10	Elevator Trim Wheel and Indicator: Inspect the trim wheel for proper condition and security of installation. Operate the trim wheel and electric trim to verify proper function, freedom of movement and full range of motion. Verify the indicator functions properly. Perform an electric trim operational check in accordance with the POH/AFM.		
ALL	11	Avionics Operating Controls: Inspect for proper operation and security of installation of controls and switches. Verify all displays illuminate properly.		
ALL	12	Autopilot Unit and Control Switches: Check for security of installation and proper operation. Perform an operational check of the autopilot system.		
ALL	13	Flap System: Perform an operational check of the flaps through their full range of travel. Inspect for loose rivets, corrosion, cracks, wrinkles, and dents. If so equipped, inspect vortex generators for condition and security. Inspect flap attach points for proper security and condition. Check flap operation for any erratic movement, interference, or binding. Check for proper operation of the flap position indicator.		
ALL	14	Aileron Trim Tab: Perform an operational check of the electric aileron trim system. Inspect ram attaching hardware for unusual wear and security of installation. Perform an Aileron Trim Tab vertical free play inspection (maximum allowed is 0.085").		
ALL	15	Pitot/Static Tube Heat: Operate the pitot heat for approximately 30 seconds and verify proper operation of pitot heat. Turn pitot tube heat OFF.		
ALL	16	Stall Warning System (If Equipped with a Stall Warning Computer): Perform an operational check of the lift transducer, stall warning horn, stall warning horn relay, and stall warning test switch. (Ground Check.)		
ALL	17	Stall Warning System (if not equipped with a Stall Warning Computer): Perform an operational check of the warning vane and horn. (Ground Check.)		
ALL	18	Exterior Lighting: Check for proper operation of beacon, strobe, NAV, taxi, pulse, and landing.		
ALL	19	Cabin Electrical Heating Units: Inspect for security of installation, Foreign objects, and signs of overheating. Perform an operational check.		
ALL	20	Exterior Fuselage: Inspect the exterior of the fuselage for general condition. Inspect skins for damage, corrosion, and loose or working fasteners.		
ALL	21	Exterior Placards and Markings: Verify presence, legibility, and security of attachment. See appropriate Kodiak Manual for requirements.		
ALL	22	Interior Placards and Markings: Verify presence, legibility, and security of attachment. See appropriate Kodiak Manual for requirements.		

DOI - KODIAK 100 SERIES - 400 HOUR INSPECTION

ACFT TYPE		400 HOUR INSPECTION REQUIREMENTS	MECH	INSP
ALL	23	Propeller Blades: Wash the blades, inspect for nicks, gouges, scratches, depressions, looseness, cracks, security, and condition. Refer to Hartzel Propeller Owner's Manual and Logbook (Manual No. 149) for further Instruction.		
ALL	24	Propeller Spinner: Remove; inspect for cracks, security, condition, and wash.		
ALL	25	Propeller Spinner Bulkhead: Inspect for cracks, security, and condition.		
ALL	26	Propeller Hub: Inspect exposed area for wear, cracks, security, condition and loose/missing hardware.		
ALL	27	Propeller Hub: Lubricate as directed by appropriate Kodiak Manual.		
ALL	28	Propeller Mounting: Inspect for proper mounting and visually inspect for security of installation.		
ALL	29	Propeller Beta Feedback Ring: Inspect ring for security of installation, condition, and any warping. Inspect the carbon block for excessive wear and any possible damage (carbon block side clearance must be 0.001" to 0.010"). Inspect the beta linkage for security and condition.		
ALL	30	Propeller: Inspect for grease and oil leaks. Perform a preload plate set screw inspection. Complete as instructed below.		

TITLE:	Preload Plate Set Screw Check	MECH	INSP
INSPECTION INSTRUCTIONS	1. Manually rotate the propeller and listen for possible noise caused by a broken set or jam nut that may be loose in the propeller hub.		
	2. With the propeller blades in the feathered position, make sure the feather (low) stop nuts are seated on the reverse adjustment sleeve. For more details, see Hartzell Owners Manual 149 Chapter 2, Figures 2-2 through 2-8 and Chapter 5, page 5-28.		
	3. If there is noise indicating a loose part or the propeller blades do not go completely to feather, remove the propeller. Send the propeller to a repair station for disassembly and inspection for a possible broken preload set screw.		
	NOTE: If a broken set screw is found, the propeller must be inspected for damage that may have been caused by the broken set screw, and the incident must be reported to the Hartzell Product Support Department.		

ACFT TYPE		400 HOUR INSPECTION REQUIREMENTS	MECH	INSP
ALL	31	Fresh Air Inlet System: Inspect clamps, hoses, valve, inlet, and ventilation system for proper condition and security of installation. Lubricate the inlet valve with LPS 1.		
ALL	32	Engine Electrical Cables: Inspect for proper routing, security, condition, and support. Check security of connections and condition of connector hardware.		
ALL	33	Battery Cables: Inspect for security, condition, and routing. Inspect battery terminal boots for deterioration, overheating, or burning.		
ALL	34	Battery Boxes: Inspect for corrosion, security, and condition. Inspect battery hold-down mechanism for proper function.		
ALL	35	Alternator: Inspect mounting for proper security, condition, and leaks. Check terminal boot for security and condition. Inspect electrical leads for damage and security.		
ALL	36	Sealed Lead Acid Batteries: Inspect batteries for general security and condition. Check battery terminals for evidence of overheating and burning.		
ALL	37	External Power Receptacle and Cables: Inspect for security and general condition.		
ALL	38	Firewall Mounted Fuel Filter: Inspect for leaks, corrosion, security of installation, and general condition. Inspect and clean filter.		
ALL	39	Brake System Reservoir: Check for security of installation, condition, and leaks. Check for proper fluid level and any contamination.		
ALL	40	Engine Mount - for cracks, looseness of mounting, and looseness of engine to mount.		
ALL	41	Engine Mount Elastomers - for poor condition and deterioration.		
ALL	42	Engine External Tubing, Wiring, Control Linkages, and Hose Assemblies: All accessible connections, clamps and brackets for attachment. **NOTE:** Inspect accessible lockwire and safety cable for security and installation. Check for wear, chafing, cracks and corrosion. **NOTE:** Visually inspect insulated air tubes for sign of swelling, cracking, bulging of rubber sheath material. Replace as necessary. Check fuel and oil lines for leaks.		

ACFT TYPE		400 HOUR INSPECTION REQUIREMENTS	MECH	INSP
ALL	43	Pay particular attention to rear linkage cam box, fuel control unit arm, telescopic rod and rod end fittings. Disconnect rod ends and clean using solvent (PWC11-027) or (PWC11-031). Lubricate with light grease (PWC04-001) after engine external wash. Examine rod end for corrosion, roughness in rotation, side play and radial play. After lubrication reinstall rod ends and torque to specified value. Check free movement of linkage.		
		(1) Visually inspect the actuating levers, control cam, and control lever mounting bracket for cracks. Cracks are not permitted.		
		(2) Visually inspect the reversing lever guide pin bracket assembly on both faces of the fillet weld area around the guide pin for cracks. If cracks are found and/or fillet weld is on one face only, replace the bracket assembly (Ref. SB1416).		
		(3) Examine the parts for minor surface damage such as scores, nicks, scratches, and gouges. Minor surface defects may be cleaned up by local blending with a fine stone or crocus cloth (PWC05-061) making sure that all sharp edges and high spots are removed.		
		(4) Inspect the pin and bolt holes in each part and the slot in the control cam, for burrs and/or chipped edges. Clean up minor damage with a suitable Swiss file or fine stone.		
		(5) Examine the grooved pin for burrs, nicks, scores and similar defects on serrations which might interfere with the fit between mating parts. Clean up minor defects with a fine stone and check the fit of mating parts.		
		(6) Inspect the flexible shaft (wire rope) casing for cuts, dents, cracks, kinks, and similar defects which might prevent free movement of the internal wire rope. Minor damage is acceptable, providing the wire rope will operate freely without binding.		
		(7) Check the wire rope for breaks in the wires, twisting, kinking, and for separation of the reverse wound coils. Reject the wire rope if damaged. Repair is not permitted.		

ACFT TYPE		400 HOUR INSPECTION REQUIREMENTS	MECH	INSP
ALL	44	Air Inlet Screen: Check for cleanliness.		
		(1) Inspect the air inlet screen wire mesh for cleanliness and/or damage. Screens with broken wire mesh must be replaced. Clean undamaged screens.		
		(2) On early PT6A-34 engines Post-SB1191: Check the spacer (5, Fig. 201) for security; rebond as necessary.		
		(3) For PT6A-34AG engines with the bleed air case; inspect the case for general condition and surface damage. Check for security of the packing material.		

ACFT TYPE		400 HOUR INSPECTION REQUIREMENTS	MECH	INSP
ALL	45	Gas Generator Case: Inspect external surfaces, and fireseal mount ring brackets for cracks, distortion, and corrosion.		
		(a) Examine for general condition, including cracks, distortion, corrosion and evidence of overheating.		
		(b) Minor corrosion on exposed surface of gas generator case may be removed (Ref. Approved Repairs). **NOTE:** If condition of gas generator case indicates further inspection is required, remove fuel manifold adapters and spark igniters.		
		1) Machined surfaces (bosses and pads) with corrosion pitting less than 0.010 inch deep and less than 75 percent of the surface is acceptable without repair.		
		(c) On engines INSTALLED in the airframe, examine the engine mounts for attachment and condition (Ref. Aircraft Maintenance Manual).		
		(d) On engines NOT INSTALLED in the airframe, examine the condition of the mounting pads and threaded holes. Damage to the threaded holes may be repaired (Ref. Approved Repairs).		

ACFT TYPE		400 HOUR INSPECTION REQUIREMENTS	MECH	INSP
ALL	46	Fireseal Mount Rings: Check for cracks and attachment of brackets and seals.		
		(1) Examine the mount ring halves (Pre-SB1445 or Post-SB1445) for attachment, damage and condition. **NOTE:** For the external tubes/lines passing through the mount rings, refer to relevant chapters in this manual.		
		(2) Examine the circumferential packing material for security (Pre-SB1445 or Post-SB1445). A loose strip may be rebonded.		
		(3) Examine the rear fireseal mount ring halves for attachment, damage and condition. **NOTE:** For the external tubes/lines passing through the mount rings, refer to the relevant chapters in this manual.		

	MECH	INSP
(4) Examine the circumferential insulating strips for attachment. Loosened strips may be rebonded.		
(5) Inspect mount ring spacers (Post-SB1441) for damage and condition. Replace as necessary.		

ACFT TYPE		400 HOUR INSPECTION REQUIREMENTS	MECH	INSP
ALL	47	Exhaust Duct: Check for cracks and distortion.		
		(1) For periodic, hot section, or unscheduled inspections such as engine sudden-stoppage or suspected aircraft heavy landing, examine the exhaust duct critically for evidence of the following:		
		(a) Examine the outer surface condition for buckling, ripples or similar distortion.		
		(b) Inspect exhaust port flanges for cracking. Cracks not exceeding 0.500 inch in length and do not progress into the stitch weld or cracks in a tangential direction not exceeding 1.000 inch long are acceptable provided they are stop drilled with a 1/16 (0.0625) inch drill.		
		(c) Examine the outer surface, particularly in the vicinity of Flanges A and C and the exhaust ports, for cracking in the metal skin, welds or flange bolt holes. Check the T5 system exit tube for security. The presence of cracks requires the removal of the exhaust duct for overhaul.		
		(d) Check for the integrity of internal structure through the exhaust ports. **NOTE:** Refer to the Aircraft Maintenance Manual for removal/installation of the exhaust stubs.		
		(e) Using suitable lighting or a borescope, examine the internal structure as far as possible for cracks, looseness and distortion.		
		(2) For engines that have incorporated SB1610 since the last overhaul and that exhibit inferior welds.		
		(a) Inspect for cracks at each minor inspection and repeat the inspection at intervals not to exceed 150 hours of flight time.		
		(b) If cracks are found, repeat the inspection at intervals not to exceed 25 hours flight time. All cracks will be marked with a suitable metal marking pencil (PWC05-018), and the length, location, duct hours and Time Since Overhaul recorded.		
		(c) Using 5x magnification, visually inspect the forward area of the exhaust duct for cracks, from the propeller reduction gearbox mounting flange to 2 inches aft around the entire circumference of the duct.		
		1) Exhaust ducts are considered serviceable provided; a) There are no more than 3 cracks. b) The total length of all cracks does not exceed 2 inches. c) No one crack exceeds 1 inch. d) When there are 2 or 3 cracks they must be separated by a minimum of 6x the length of the longest crack or 3 inches, whichever is greater. e) The growth rate of any crack does not exceed 0.015 inch/hour of operation.		
		(3) With the power turbine vane ring and stator housing removed (Ref. Fig. 201):		
		(a) Inspect the exhaust duct (1) for cracks at Flange D in the location shown in detail A. Close visual and dye penetrant inspection should be carried out. When cracks are indicated, remove the exhaust duct for overhaul.		

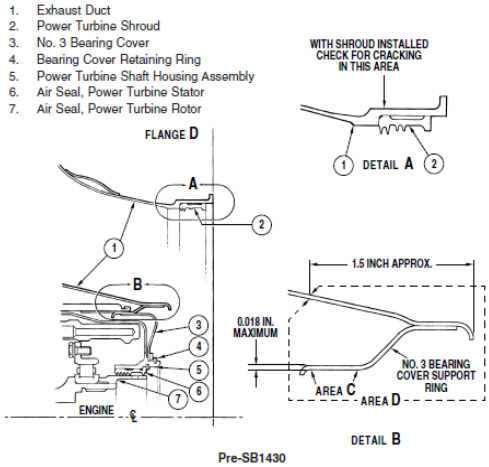

Removal/Installation of Exhaust Duct
Figure 201

	MECH	INSP
(4) With the power turbine disk removed:		
(a) Inspect the installed No. 3 bearing cover (3) Pre-SB1430. If evidence of looseness or rotation is present, refer to applicable manual.		
(b) Inspect the exhaust duct (1) area C where the bearing cover (3) Pre-SB1430 outside diameter mates with the exhaust duct. Light fretting may be polished out to the minimum material thickness of 0.018 inch. Evidence of the bearing cover rotation requires close visual and fluorescent dye penetrant inspection. The presence of cracks requires the removal of the exhaust duct for overhaul (Ref. Para. 5.A.).		
(c) Inspect the end of the ski jump Pre-SB1430 area D, Detail B, for cracks using fluorescent dye penetrant inspection. No cracks allowed.		

ACFT TYPE		400 HOUR INSPECTION REQUIREMENTS	MECH	INSP
ALL	48	Propeller Shaft Seal: Check for oil leaks.		
		A. Inspection of Oil Seal Retaining Ring or Ring Halves		
		(1) Examine oil seal retaining ring or ring halves for nicks, burrs and surface damage. Light stoning of damaged surfaces is acceptable.		
		(2) Check integrity of Post-SB1381/Post-SB1652 felt strip inserts in oil seal retaining ring halves . If worn or damaged, retaining ring halves must be shipped to an approved overhaul facility for felt strip insert replacement.		
		B. Inspection of Oil Seal Runner		
		(1) Examine visible area of seal runner for nicks, burrs and other surface damage caused by tools during removal of seal. No repair is acceptable. Ship power output section of engine to an approved overhaul facility for replacement of defective seal runner.		
		NOTE: If applicable, check the integrity of the sealant (PWC09-001) between the forward lip of the oil seal runner and propeller shaft. Replace if necessary.		
		(2) Examine the propeller shaft oil seal contact area on seal runner for wear (grooving). If concentrated wear is present, installation of an alternate offset propeller shaft oil seal should be considered. This offset seal will contact the runner at a different location (Ref. IPC).		

ACFT TYPE		400 HOUR INSPECTION REQUIREMENTS	MECH	INSP
ALL	49	Accessories: Inspect attachment and linkages, air, oil and fuel lines. **NOTE:** Visually inspect insulated air tubes for sign of swelling, cracking, bulging of rubber sheath material. Replace as necessary. Inspect for oil and fuel leaks as applicable. Check starter-generator gearshaft splines for wear (At starter-generator removal/replacement only)		
		(1) Insulated Tube Assemblies		

	MECH	INSP
(a) Examine flanged end fitting for elongated holes.		
(b) Examine tube assemblies IAW applicable engine maintenance manual.		
(c) Blend out damage that does not exceed specified limits. Replace tube assemblies damaged beyond limits.		
(d) Examine the insulation on the pneumatic tube assemblies for cuts in the outer rubber sheath. Surface cuts up to three inches long may be repaired.		
(e) If surface damage exceeds specified limits above, but depth is superficial, sheathing may be repaired by replacement of damaged portion.		
(f) Examine the metal braid and electrical lead on heated tubes for cuts. Up to three broken wires per plait, or six broken wires per linear foot, are acceptable. Replace the tube assemblies where metal braid is chafed or worn through to the lead conductors.		
(2) For Post-SB1495 Engines Air Filter Housing Drain Valve Assembly.		

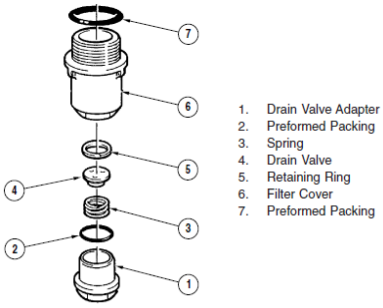

Post-SB1495 Engines

Removal/Installation of Air Filter Housing Drain Valve
Figure 205

	MECH	INSP
(a) Filter Cover (6):		
1) Check lockwire holes for damage (tearing, cracks).		
2) Check threads for damage.		
3) Check that contact area is free of nicks and/or scratches.		
(b) Retaining Ring (5):		
1) Check for distortion. Replace if distorted.		
(c) Drain Valve (4):		
1) Check that contact area is free of nicks and/or scratches.		
2) Make sure drain holes are clear and unobstructed.		
(d) Valve Spring (3):		
1) Check for corrosion and/or damage. Reject if unsatisfactory.		
(e) Drain Valve Adapter (1):		
1) Check threads for damage.		
2) Check that contact area is free of nicks and/or scratches.		
3) Check flats and lockwire holes are free of damage.		
4) Check retaining ring groove. Reject if damaged or worn.		

	MECH	INSP
A. Accessory Gearshaft Spline Wear Check.		

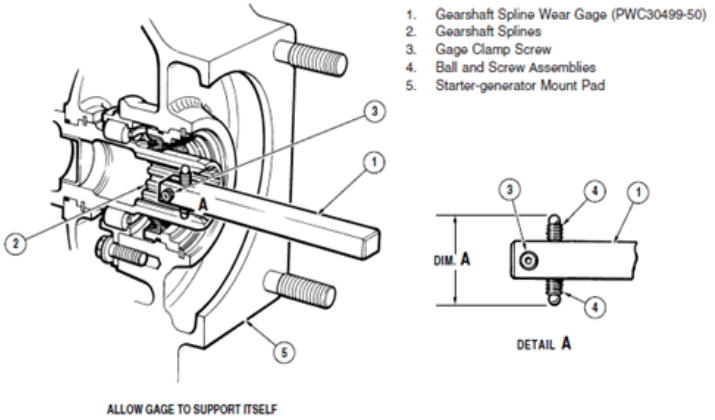

Accessory Gearshaft Spline Check
Figure 204

	MECH	INSP
NOTE: The accessory gearshaft must be checked for spline wear at related component removal/installation (Ref. Aircraft Maintenance Manual).		
(1) Release the clamp screw (3) and adjust the screw assemblies (4) to obtain the dimension of 0.660 inch over the ball ends. Tighten the clamp screws and recheck the dimension.		
(2) Tilt the gage (1), outer end uppermost, and insert the gage (PWC30499-50) into the shaft centerbore until the ball ends are approximately midway along vertically opposite splines.		
(3) Gradually release the gage, allowing it to support itself in the shaft. If the gage is self-supporting, the gearshaft is considered serviceable. If the gage extension falls below the horizontal, the gearshaft must be replaced.		
B. Oil Filler Cap, Dipstick/Gage Assembly and Oil Filler Tube.		

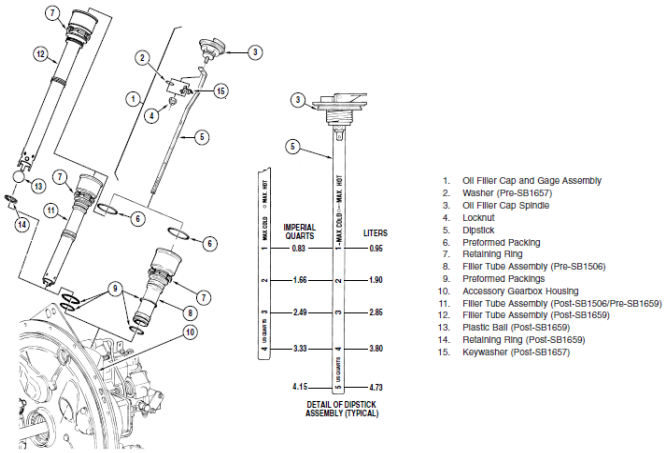

Removal/Installation of Oil Filler Cap, Dipstick/Gage Assembly and Oil Filler Tube
Figure 203

	MECH	INSP
(1) Examine the filler cap and level indicator assembly, and the oil filler tube for corrosion and signs of damage.		
(2) For Post-SB1506 Engines: Make sure the ball moves freely in the check valve of the filler tube.		
(3) Check the spring-loaded locking feature of the cap for serviceability. If the force required to depress/lift the handle is outside the limit (8 to 11 lbs.), remove the cap and tighten/loosen the self-locking nut to meet the required limit.		
NOTE: Ensure the self-locking nut is securely fastened (refer to SB1637 - Inspection of Oil Tank Filler Cap).		
(4) Check the gage blade for security and visible damage.		

	MECH	INSP
(5) When the cap is locked, there should be no movement. If movement is found, replace the cap.		
C. Inspection of Scavenge Pump Inlet Screen		

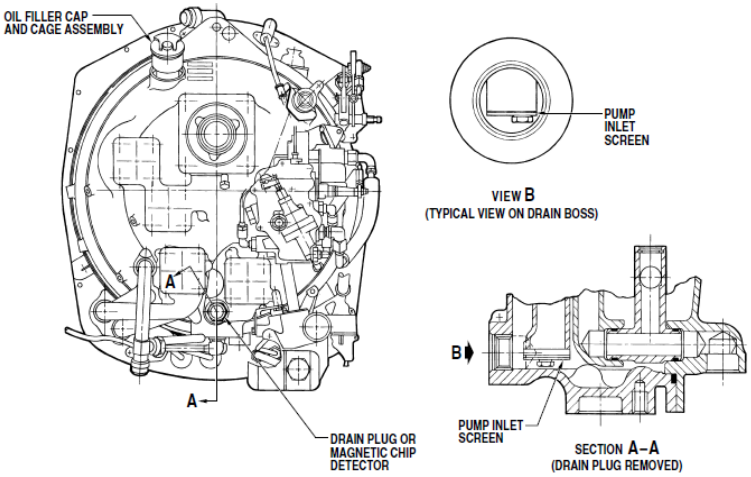

Scavenge Pump Inlet Screen Inspection
Figure 205

	MECH	INSP
(1) Remove oil drain plug located on the AGB housing (Ref. Fig. 205).		
NOTE: For engine equipped with an AGB chip detector, remove the chip detector.		
(2) Collect drained oil in a clean container and check for any debris IAW maintenance manual.		
(3) Use a mirror and suitable light source (or borescope) and inspect the scavenge oil pump inlet screen for carbon or debris IAW appropriate maintenance manual.		
NOTE: Any foreign material found blocking the screen or contained in the oil should be identified. Look especially for paint flakes approximately 1/8 inch to 1/2 inch in diameter IAW appropriate manintenance manual.		
(4) If carbon or debris is present, clean the inlet screen (Ref. Cleaning/Painting, Fig. 205).		
(5) Install the drain plug on the AGB housing IAW appropriate maintenance manual.		
NOTE: For engine equipped with an AGB chip detector, install the chip detector.		
(6) Replenish the drained oil (if not contaminated by foreign material) in oil tank (Ref. Chapter 72-00-00, SERVICING).		

ACFT TYPE		400 HOUR INSPECTION REQUIREMENTS	MECH	INSP
ALL	50	First-stage Compressor Rotor: Do a visual inspection with a mirror or a borescope. **NOTE:** If any FOD has caused the engine to become prone to engine surges or causes unusual compressor whining, the large bent airfoil will make the whining sound. Remove the engine immediately.		
ALL	51	Hot Section: Examine with borescope. In conjunction with periodic fuel nozzle leak and function tests. For Post-SB1590 engines NOT incorporating SB1627 or SB1628: (1) Analyse engine condition trend monitoring system data on a weekly basis. No baseline HSI is required. (2) If the analysis indicates that the engine is deteriorating, then do a hot section inspection.		
		Hot Section Inspection (Ref. Fig. Appropriate HSI Sheets)		
		(1) For a normally scheduled HSI, do a ground performance run.		
		(2) Remove the RGB strainer, the main oil filter and the chip detector(s). Verify the debris.		
		(3) Verify Compressor for FOD.		

	MECH	INSP
(4) Remove power section/power section module.		
(5) Measure the radial CT blade tip clearance and remove compressor turbine disk and blade assembly IAW appropriate manual.		
(6) Remove combustion chamber liner IAW appropriate manual.		
NOTE: Should it be necessary during HSI, to make a more detailed inspection of components which remain installed, those components should be removed IAW appropriate manual.		
(7) Verify components as per Pratt and Whitney PT6 Maintinance Manual Table 603.		
(8) If HSI is done due to over temperature, remove PT stator housing IAW appropriate manual.		
(9) If necessary, calibrate and verify aircraft instrumentation after engine assembly.		
(10) Do a ground performance run and inspect BOV closing point IAW appropriate manual.		
(11) If a significant T5 increase is noted after ground performance run, borescope hot section for CT blade shroud rub.		

ACFT TYPE		400 HOUR INSPECTION REQUIREMENTS	MECH	INSP
ALL	52	Oil System: Check oil level. **NOTE:** For oil change recommendations, refer to SB1001. Check condition and locking of oil filler cap. Oil filter elements and secondary screen (coarse hat-type screen attached to the inner end of the filter). Elements must be inspected and cleaned. Light traces of sediment only may be removed from the main filter screen. All other contamination requires replacement of filter element. Any foreign material found in main oil filter or on chip detector, should be identified before further inspection/operation. **NOTE:** Inspect initially at 100 hours with extension to relevant airframe zone inspection based on inspection results but not to exceed 200 hours. **NOTE:** If the engine has a recent history (within 200 flight hours) of generating carbon debris; do the inspection at 100 hours interval and replace the filter element at 300 hours interval. Refer to appropriate manual for the instructions to start oil filter inspection again and for the oil filter replacement intervals. **NOTE:** If carbon like deposits are found, drain accessory gearbox oil into a clean container and examine debris. Varnish flakes are non metallic and are usually dark on one side and shiny, similar to bronze, on the other side. They are hard and will not form into paste when rubbed between fingers.		
ALL	53	Check magnetic chip detector(s) for continuity, open circuit must exist indicating no contamination at pole tips. If continuity is there, remove and examine for contamination. Any foreign material found on the chip detector or in the main oil filter must be identified before further inspection/operation. Refer to applicable manual. (See NOTE 3). **NOTE 1:** FOR SINGLE ENGINE AIRCRAFT, If the chip detector is connected to a cockpit indicating system, examine the chip detector initially at 100 hours with extension to relevant airframe zone inspection based on the inspection results, but not more then 200 hours. **NOTE 2:** FOR TWIN ENGINE AIRCRAFT, If the chip detector is connected to a cockpit indicating system, examine the chip detector initially at 100 hours with extension to relevant airframe zone inspection based on the inspection results, but not more than 400 hours. **NOTE 3:** While the chip detector is removed, examine with both poles bridged. With poles unbridged, inspect if continuity exists, and if no continuity exists, replace the chip detector.		
ALL	54	Bridge chip detector(s) magnetic pins with suitable jumper, and using a suitable ohmmeter, check continuity between connector pins. If continuity does not exist, replace chip detector. Any foreign material found on chip detector or in main oil filter should be identified before further inspection/operation. Refer to appropriate maintenance manual. **NOTE:** For aircraft equipped with an airframe supplied indicating device, the integrity of the complete indicating system can be checked by re-attaching the electrical connector to the removed chip detector and check for chip indication when magnetic poles are bridged. Closed circuit condition must exist.		
ALL	55	Check scavenge oil pump housing for leaks.		

ACFT TYPE		400 HOUR INSPECTION REQUIREMENTS	MECH	INSP
ALL	56	Check the AGB internal scavenge oil pump inlet screen IAW appropriate maintenance manual. Collect drained oil. Using a mirror and a flashlight inspect the scavenge oil pump inlet screen. Any foreign material found blocking the screen or contained in the oil should be identified before further operation.		
		A. Cleaning of Scavenge Oil Pump Inlet Screen (Ref. Fig. 205)		

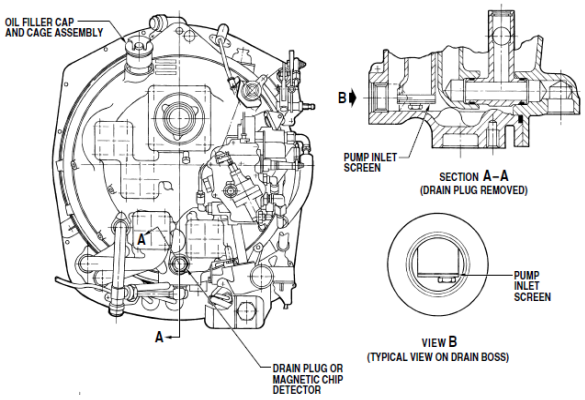

Scavenge Pump Inlet Screen Inspection
Figure 205

	MECH	INSP
(1) If carbon is present on the screen mesh, loosen with a suitable small plastic scraper or similar nonmetallic scraper. Do not deform the screen mesh.		
(2) Flush any carbon residue from the AGB as follows:		
(a) Remove the oil filler cap.		
(b) Remove the retaining ring and the oil filler tube (Ref. Removal/Installation)		
(c) Place a suitable container under the AGB drain, and pour approximately 34 fluid ounces (one liter) of new engine oil (PWC03-001) heated to 122°F (50°C), into the AGB filler tube opening. Make sure oil does not enter oil tank.		
(d) Let oil drain. Examine inlet screen and surrounding area to make sure carbon residue is removed. If not, repeat flushing procedure above.		
(3) Install oil filler tube (Ref. Removal/Installation).		
(4) Refill oil tank IAW appropriate maintenance manual.		

ACFT TYPE		400 HOUR INSPECTION REQUIREMENTS	MECH	INSP
ALL	57	Fuel System: Check fuel for water contamination. Check fuel pump for installation and leaks IAW appropriate manual. **NOTE:** If airframe fuel boost pump fails or is inadvertently left off for an accumulative time in excess of 10 hours, the engine driven fuel pump must be removed and replaced. The removed pump should be sent to an approved overhaul facility. **CAUTION:** ON NEW AIRCRAFT, CHECK FILTER AFTER EACH FLIGHT UNTIL NO CONTAMINATION IS EVIDENT. CHECK AFTER FIRST FLIGHT OR GROUND RUN WHENEVER ANY COMPONENT UPSTREAM OF FILTER IS REPLACED.		
ALL	58	Check outlet filter for foreign matter or distortion IAW appropriate manual. Install new filter as service conditions dictate, not to exceed 600 hours and when fuel system contamination is suspected.		
ALL	59	Check drain valve for installation and leaks IAW appropriate manual.		
ALL	60	Check FCU for installation, linkages and pneumatic tubes IAW appropriate manual.		
ALL	61	For Post-SB1568: Do a deceleration check IAW appropriate manual. **NOTE:** Not required for FCU identified with ‘‘RE52’’, ‘‘SB 73-3’’ or with a serial number that contains the letter F as prefix.		
ALL	62	For engines fitted with a manual override on the fuel control, check FCU Manual Override System for static operation.		

DOI - KODIAK 100 SERIES - 400 HOUR INSPECTION

ACFT TYPE		400 HOUR INSPECTION REQUIREMENTS	MECH	INSP
ALL	63	Check FCU for bearing wash-out, indicated by blue dye (grease and fuel mixed) at FCU vent .		
ALL	64	Check starting flow control/flow divider for installation and leaks IAW appropriate manual.		
ALL	65	Leak test and function test fuel manifold adapter and nozzle assemblies IAW appropriate manual. **NOTE 1:** Do the periodic borescope inspection of the hot section components in conjunction with the following tests. **NOTE 2:** Regular fuel nozzle maintenance is important for hot section durability. Inspection recommended at routine intervals according to: Engines ON fuel nozzle in-situ cleaning program, test fuel nozzles and repair as necessary. Where fuel quality is not sure, and for operators new to PT6A operation, inspection is recommended at 400 hours initially, with extension based on the operators experience and rejection rate, not more than 200 hours. For other operators, inspection is recommended at 600 hours initially, with extension based on the operators experience and rejection rate, not more than 200 hours. Engine NOT ON fuel nozzle in-situ cleaning program, test fuel manifold adapter. Where fuel quality is not sure, and for operators new to PT6A operation, cleaning/inspection is recommended at 200 hours initially, with extension, based on the operators experience and rejection rate, not more than 200 hours. For other operators, inspection is recommended at 400 hours initially, with extension based on the operators experience and rejection rate, not more than 200 hours.		
ALL	66	Check oil-to-fuel heater installation IAW appropriate manual.		
ALL	67	Ignition System: Check ignition exciter/current regulator for installation and condition IAW appropriate manual.		
ALL	68	Check ignition cables for chafing, wear and installation IAW appropriate manual.		
ALL	69	Check spark igniter/glow plugs for cleanliness and erosion. Check function IAW appropriate manual. **NOTE:** Inspect initially at 100 hours with extension to relevant airframe zone inspection based on inspection results but not to exceed 200 hours.		
ALL	70	Pneumatic System: Check P3 filter for installation IAW appropriate manual.		
ALL	71	Inspect pneumatic tubes and lines for cracks and damages especially at the end fittings and joints.		
ALL	72	Clean or replace filter, dependent on condition, service experience or environment IAW appropriate manual. **NOTE:** Visually inspect the P3 filter for corrosion. If the filter shows presence of corrosion, discard the filter and replace with a new filter.		
ALL	73	Clean and inspect Post-SB1495 P3 filter drain valve housing assembly IAW appropriate manual. **NOTE:** Filter contamination is greatly influenced by particular operating conditions and environment, inspection intervals may be modified accordingly.		
ALL	74	Propeller Governor and Overspeed Governor: Inspect for leaks, security, and condition. Inspect security of installation on electrical connections.		
ALL	75	Np Tachometer Generator: Inspect for leaks, condition, and security of installation.		
ALL	76	Engine Compartment: Inspect for leakage, general condition, damage, and security.		
ALL	77	Engine Cowlings: Inspect structure and fasteners for security and condition. If the nose cowling heat blanket is installed, inspect for security of installation. If the nose cowling heat blanket is not installed, inspect the interior of the nose cowling for delamination, major discoloration and blistering. If damage or defects are detected, refer to Quest Recommended Service Bulletin SB11-01.		
ALL	78	Tubular Engine Mounts: Inspect for signs of corrosion, cracks, and security of installation. Inspect for signs of abrasion or wear.		
ALL	79	Engine Firewall: Inspect for cracks, condition, and signs of damage. Check for cracked or deteriorated firewall sealant.		
ALL	80	Engine Vibration Isolators and Ground Straps: Inspect for deterioration of rubber vibration isolators. Inspect for security of installation and condition.		
ALL	81	Induction Air Plenum: Remove access shroud, inspect for condition, security of installation, and cracks.		
ALL	82	Engine Air Inlet Screen: Inspect for security of installation, condition, and cleanliness. (If inlet screen is dirty the compressor section is likely to also be dirty, and a compressor wash is recommended).		
ALL	83	Gas Generator Case: Inspect for corrosion, distortion, and cracks.		

ACFT TYPE		400 HOUR INSPECTION REQUIREMENTS	MECH	INSP
ALL	84	Engine Accessories: Inspect for leakage, condition, and security of installation.		
ALL	85	Inspect fuel nozzles as instructed below.		
		CAUTION: USE EXTREME CARE WHEN HANDLING FUEL NOZZLE ASSEMBLIES SINCE EVEN FINGERPRINTS ON THE ORIFICE MAY PRODUCE POOR SPRAY PATTERN. CLEAN, LINT FREE GLOVES SHOULD BE WORN AT ALL TIMES WHEN HANDLING PARTS.		
		A. Fuel Nozzle Assembly		
		(1) Check the nozzle assembly for burrs and similar defects. Threads and hexagon may be lightly stoned to remove nicks and burrs.		
		B. Nozzle Sheath (Ref. Fig. 206)		
		(1) Erosion, any loss of coating is acceptable provided any loose coating is removed by light buffing and 0.040 inch minimum dome thickness is retained .		
		(2) Fretting wear, maximum permissible depth is 0.010 inch; deburr raised material.		
		C. Manifold Adapter		
		(1) Check the locating pin for security in the adapter and for burrs and similar defects. Check threads for damage.		
		D. Transfer Tubes (Ref. Fig. 207)		
		(1) Examine for general condition and check preformed packing grooves and lands for damage. Minor surface damage in the form of burrs and scratches, may be removed by blending.		
		(2) Inspect for bent transfer tubes (1) as follows:		
		(a) Put the transfer tube on flat surface and roll the transfer tube. If an elliptical motion is produced at any point along the tube, reject the tube.		
		(3) Inspect condition of external anodic finish.		
		(4) Examine the bore of each tube is free from blockage. Install the cap on the transfer tube (1) after inspection.		

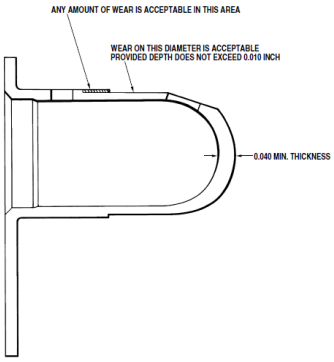

Nozzle Sheath Wear Limits
Figure 206

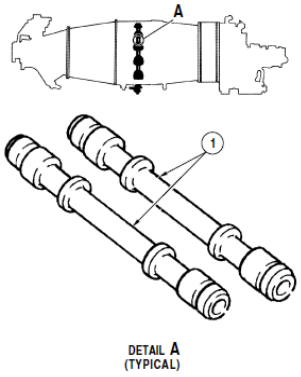

Fuel Manifold Transfer Tube
Figure 207

			MECH	INSP
ALL	86	EPA and Oil Drain Sump Cans: (If Equipped) Inspect can for leakage, condition, and security of installation. Completely drain can.		
ALL	87	EPA Can/Ejector Assembly: (If Equipped) Inspect assembly for leakage, condition, and security of installation. Completely drain can. Ensure that the alternate vent at the top of the ejector assembly is clean and free from debris.		
ALL	88	Engine System Drain Lines: Inspect the engine oil and fuel drain lines for proper routing of lines, deterioration of hoses, security of installation, and signs of leaks or damage.		
ALL	89	Drain Vents: Inspect vents on lower portion of cowlings for cleanliness and obstructions.		
ALL	90	Engine Fuel Lines: Inspect motive flow and fuel supply lines for chafing, deterioration, fuel leaks, and security of installation.		
ALL	91	Inspect the mounting lugs visually for cracks and other defects. Cracks are not permissible; minor surface damage may be repaired.		

ACFT TYPE		400 HOUR INSPECTION REQUIREMENTS	MECH	INSP
ALL	92	Inspect the machined mounting faces for gouges, nicks, scores, scratches, and similar surface defects which can damage the gasket between the pump and accessory gearbox and/or prevent proper mating of the fuel control unit to the pump. Particular attention should be paid to the seal recess at the bypass port between the studs in mounting face for the fuel control unit.		
ALL	93	Inspect the bore of the inlet port for damage on the sealing surface.		
ALL	94	Check the studs for security and for damage to the threads.		
ALL	95	Inspect the seal seepage drain port and fuel outlet port adapter for damage to the threads.		
ALL	96	Check for leakage from seal drain port:		
		(a) Coupling drive oil leaks from fuel pump drain should not exceed 3 cc per hour. If limits are exceeded, replace plain seal on accessory gearbox pad. If leaks are still present and exceed limits, ship unit for overhaul.		
		(b) Fuel leaks should not exceed 20 cc per hour. If leakage exceeds limit, ship fuel pump for overhaul. **NOTE:** If limit is exceeded, inspect FCU driveshaft bearing area for fuel contamination.		
		(1) Examine mounting flange, housing and components of lever mechanism for cracks and other surface defects. Cracks are not permissible; minor defects may be repaired.		
		(2) Examine ports for damage to internal threads and, if evident, send unit for rectification at an overhaul facility.		
		(3) Examine elbow fittings for damage to threads.		
		(4) Examine external surfaces for corrosion and for general condition of anodic treatment.		
		(5) Traces of blue grease on the driveshaft bearing face and retaining plate are acceptable. Presence of grease, with a hard or jelly-like consistency, indicates that the area has not been contaminated by excess fuel or oil and the driveshaft bearing stays lubricated.		
		(6) Check that the drive shaft turns smoothly by spinning with light finger force. The driveshaft should stop turning when finger force is released.		
		NOTE: A free spinning driveshaft indicates that the bearing has been subjected to lubricant wash-out and this is cause for rejection. Send the unit for rectification to an approved overhaul facility.		
		(7) Check the drive couplings and FCU driveshaft for worn splines. Reject unit if any wear is found.		
		(8) Brinelling of the driveshaft bearing is cause for rejection. Send the unit for rectification to an approved overhaul facility.		

ACFT TYPE		400 HOUR INSPECTION REQUIREMENTS	MECH	INSP
ALL	97	Inspect the splines on the drive coupling for nicks, gouges and chips.		
ALL	98	Examine the external surfaces of the pump for corrosion and for the general condition of the anodic treatment.		
ALL	99	Check for signs of leakage from the joint between the pump cover and pump housing. If leakage is evident, return the pump for overhaul.		
ALL	100	Examine the inlet filter element for damage and/or breaks in the screen mesh.		
ALL	101	The discharge filter is disposable and should be subjected only to visual examination for defects if the life of the part has not expired.		
ALL	102	Check that flexible hoses are fitted to avoid interference with the operation of the reversing linkage mechanism.		
ALL	103	Sundstrand Fuel Pump Coupling In-Situ Inspection - Remove the drain line and fitting from the fuel pump drain port (2, Fig. 202). **CAUTION:** IF A COTTON SWAB OR SIMILAR DEVICE IS USED FOR THIS INSPECTION, CARE MUST BE TAKEN TO MAKE SURE NO FOREIGN MATTER REMAINS IN THE DRAIN PORT OR ASSOCIATED FITTINGS AND LINES.		

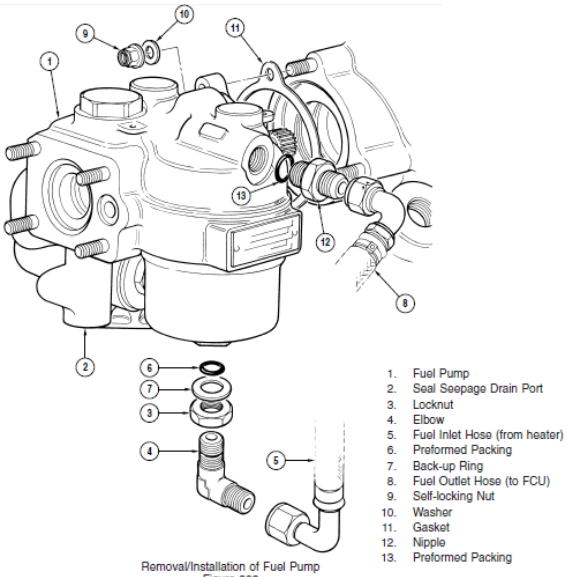

Removal/Installation of Fuel Pump
Figure 202

ACFT TYPE		400 HOUR INSPECTION REQUIREMENTS	MECH	INSP
ALL	104	Insert a cotton swab, or equivalent, 1.0 to 1.5 in. deep into the drain port of the fuel pump (Ref. Fig. 203).		
ALL	105	Angle the cotton swab (Ref. Fig. 203) and roll it inside the drain port to collect evidence of a possible reddish-brown deposit (iron oxide).		

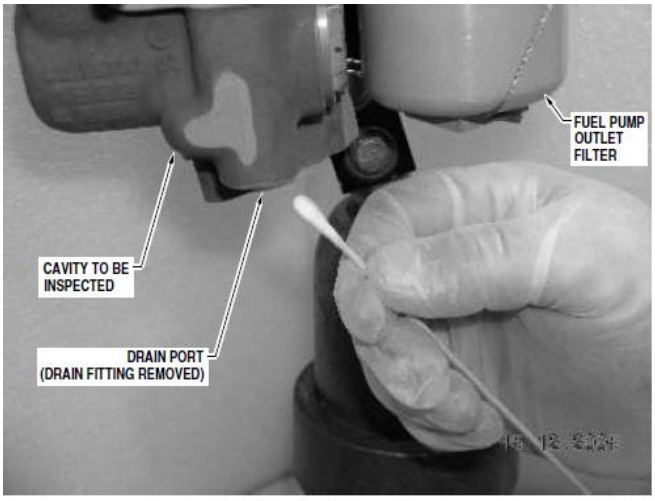

Fuel Pump In-situ Inspection
Figure 203

ACFT TYPE		400 HOUR INSPECTION REQUIREMENTS	MECH	INSP
ALL	106	If no reddish-brown (iron oxide) stain is evident, the fuel pump may remain in service. **CAUTION:** DO NOT REMOVE THE FUEL PUMP COUPLING. REMOVAL MAY CAUSE CHIPPING OF THE SPLINES AND/OR LOSS OF THE CIRCLIP RETENTION. THE CIRCLIP ALLOWS VERY LIMITED MOVEMENT OF THE PUMP COUPLING.		
ALL	107	If a reddish-brown (iron oxide) stain is evident:		
		Remove fuel pump.		
		(b) Examine the input coupling shaft area of the pump face (Ref. Fig. 201) for residue from fretting corrosion (iron oxide deposit). If none is present, the pump may remain in service.		
		(c) Evidence of corrosion residue indicates possible spline wear. Return the fuel pump to an approved overhaul facility.		
		(d) Install a replacement fuel pump.		

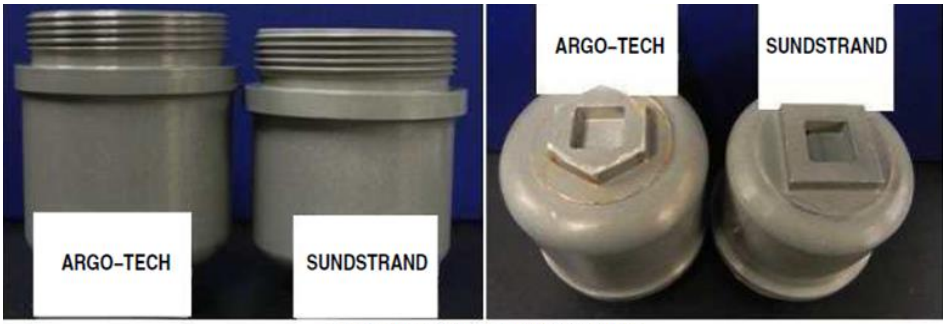

Removal/Installation of Fuel Pump Filters
Figure 201

ACFT TYPE		400 HOUR INSPECTION REQUIREMENTS	MECH	INSP
ALL	108	Fuel Manifold: Inspect for evidence of fuel leaks and security of installation.		
ALL	109	Flow Divider: Inspect for fuel leaks and security of installation.		
ALL	110	Firewall Fuel Shutoff Control: Perform an operational check as described below.		

TITLE:	Firewall Fuel Shutoff Control Operational Check Procedure	MECH	INSP
INSPECTION INSTRUCTIONS	1. Operate the control to check for freedom of movement and positive engagement of the shutoff valve at the firewall.		
	2. With the firewall shutoff valve closed, open the drain valve on the firewall mounted fuel filter. Verify proper operation of the shutoff valve by checking that only a small amount of fuel flows from the filter drain valve.		

ACFT TYPE		400 HOUR INSPECTION REQUIREMENTS	MECH	INSP
ALL	111	P3 Filter: Clean and inspect for general condition.		
ALL	112	Fuel Control Unit: Inspect for fuel leaks and security of installation.		
ALL	113	Fuel Control Unit: Inspect for bearing washout (indicated by leakage of a mixture of blue dyed grease and fuel) at the FCU vent.		
ALL	114	FCU Manual Override: Perform FCU Manual Override System static check.		
ALL	115	Fuel Flow Transducer: Inspect for fuel leaks, evidence of damage and security of installation.		
ALL	116	Ignition Exciter Box: Inspect for proper condition and security of installation.		
ALL	117	Ignition Exciter Unit Wiring Harness: Inspect for proper routing, condition and security of electrical connections.		
ALL	118	Ignition Cables: Remove ignitor box and ignitor cable ends. Inspect for wear, chafing, security, and proper routing. Clean contact ends as instructed below.		
		(1) Inspect cables for signs of damage to braiding and general condition.		
		(2) Inspect cable coupling nuts for corrosion.		
		(3) Inspect central conductor and insulation for contamination and burning.		
		(4) Do retention test on igniter end of cable only:		
		(a) Mate an igniter plug to the end of the cable, but do not attach it.		
		CAUTION: DO NOT LET THE IGNITER PLUG DROP TO THE GROUND WHEN PERFORMING THE NEXT STEP.		
		(b) The igniter plug must remain in place when pointed toward the ground.		
		(c) Positive retention must exist between the ignition cable terminal and the igniter plug. Do retention test again with new igniter plug if necessary. Replace ignition cable if not successful.		

ACFT TYPE		400 HOUR INSPECTION REQUIREMENTS	MECH	INSP
ALL	119	Inspect spark igniters as instructed below.		
		(1) Inspect the exterior cylindrical area of the firing end of the igniter shell for chafing wear. Wear is acceptable to a depth of 0.015 inch.		
		(2) Inspect the igniter shell and electrode for erosion (Ref. Fig. 204 and Table 202). If erosion equals or exceeds amounts shown, reject the spark igniter.		
		(3) Do a functional test on acceptable and replacement spark igniters.		

CAUTION:
SHOULD AN IGNITER PLUG BE DROPPED, INTERNAL DAMAGE, POSSIBLY NOT DETECTABLE BY TEST, CAN OCCUR. RECOMMENDATION IS TO REPLACE THE IGNITER PLUG.

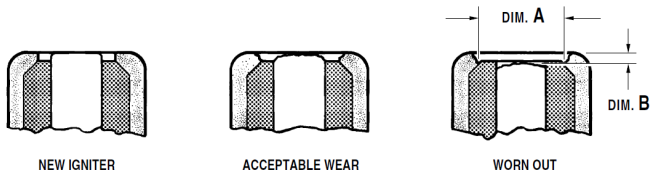

TABLE 202, Spark Igniter Erosion Limits

P&WC PART NO.	VENDOR NAME AND PART NO.	DIM. A (IN)	DIM. B (IN)
* 3014986	Champion: FHE-182	0.3437	0.0312
* 3024706	A.C.: 5611760	0.2750	0.1000
** 3027280	Champion: CH34055	0.3000	N/A
** 3031213	Bendix: 10-390667-1	0.3000	N/A

* Earlier parts supplied under ordering Part No. 3014981.

** Later parts supplied under ordering Part No. 3032096. Igniters eroded beyond limits should be replaced by latest part(s), if available.

ACFT TYPE		400 HOUR INSPECTION REQUIREMENTS	MECH	INSP
ALL	120	Engine Controls: Check for proper operation, freedom of movement and that full range of motion is attained. Check that component stops are reached prior to the cockpit control stops. Inspect for security of installation, corrosion, wear, evidence of damage, proper routing and any deterioration.		
ALL	121	Engine and Propeller Control Linkages and Attach Brackets: Inspect for wear, corrosion, freedom of movement, security of installation and general condition.		
ALL	122	Engine Control Rod Ends: Inspect for corrosion, freedom of movement, and radial play. Lubricate the rod ends with LPS-1. * Engine Control Rod Ends must also be lubricated following each external engine wash.		
ALL	123	Propeller Reversing Cam: Check for proper operation, clean and lubricate with Lubriplate 630AA.		
ALL	124	Ng Tachometer Generator Wiring: Inspect the electrical wiring for proper routing, chafing and security of installation; check electrical connections for security of installation.		
ALL	125	Torque Transmitter: Inspect for leakage, condition and security of installation.		
ALL	126	Torque Indicator Plumbing: Inspect for leakage, damage, condition and security of installation.		
ALL	127	T5 Terminal Block and External Wiring: Inspect for chafing, security, and general condition. Conduct inspection as instructed below.		
		(1) Inspect the installed bus-bar probe assembly for security and signs of damage. Damaged probes will necessitate individual replacement. Loose terminal posts and missing insulation may be repaired.		
		(2) T5 wiring harness inspection:		
		(a) Examine the harness for broken or damaged braiding and/or insulation. Stainless braiding that is lifted or broken may be cut away, provided insulation remains intact.		
		(b) Examine the terminal block for security to the harness leads, loose terminals and missing insulation. Replace missing insulation and secure loose terminals.		
		(c) Examine terminal lugs for condition. Replace loose or damaged lugs.		

DOI - KODIAK 100 SERIES - 400 HOUR INSPECTION

	MECH	INSP
(3) Trim thermocouple inspection:		
(a) Inspect the trim thermocouple leads for damage to the outer covering and loose or damaged terminal lugs. Check the probe outer casing for damage and corrosion, and the flange for security.		
(4) Bus-bar inspection:		
(a) Bus-bar insulation resistance must not be less than 50,000 ohms.		
(b) Check bus-bar for breaks, kinks, damage or loose bracket.		
(c) Return defective bus-bar for possible repair to the following P&WC facility: P&WC Accessories Services 333 Rue D'Auvergne (Area 2K) Longueuil, Quebec Canada J4H 3Y3		

ACFT TYPE		400 HOUR INSPECTION REQUIREMENTS	MECH	INSP
ALL	128	Trim Thermocouple: Inspect for condition and security of installation.		
ALL	129	Engine Exhaust: Inspect ducts for cracks, distortion, evidence of damage, and security of installation.		
ALL	130	Oil Filter Element: Remove filter element and inspect for damage and debris. Clean filter.		
ALL	131	Oil Cooler: Inspect for signs of damage and security of installation. Inspect ducting and seals for proper condition and security of installation.		
ALL	132	Oil Filler Cap and Dipstick: Inspect for proper condition and security of installation.		
ALL	133	Chip Detector Annunciation: Perform annunciation test (If Equipped).		
ALL	134	Chip Detector: Remove from nose case and visually inspect for foreign material. Perform chip detector functional test.		
ALL	135	Oil Pressure Sensors: Inspect plumbing for leakage, condition and security of installation. Inspect the electrical connections for evidence of damage, condition and security of installation.		
ALL	136	Oil Temperature Sensor: Inspect for leakage, proper condition and security of installation. Inspect electrical connection for evidence of damage, condition and security of installation.		
ALL	137	Starter-Generator: Inspect terminal block, boots, and electrical connections for security of installation, cleanliness, signs of overheating or arcing, and other damage.		
ALL	138	Starter-Generator: Inspect the electrical cables for proper routing, condition and support. Inspect connector hardware for security of installation and condition.		
ALL	139	Instrument Panel Ventilation Air Outlets and Controls: Inspect outlet controls for proper operation, condition, and security of installation.		
ALL	140	Autopilot Cutoff Relay (If Equipped): Inspect relay for security of installation, signs of electrical damage or other damage, and proper operation.		
ALL	141	Pilot, Copilot, and Passenger Restraints: Inspect pilot and copilot inertia reels for proper operation. Inspect pilot, copilot and passenger seat belts and shoulder harnesses for condition, frayed edges, signs of damage, and proper operation.		
ALL	142	Pilot, Copilot, and Passenger Seats: Inspect seat brackets, guides, and stops for security and condition. Inspect controls for security, condition and proper operation. Inspect the seat structure and seat cushions for proper condition and security. Service the seat position adjusting screws, bearings and locking mechanisms.		
ALL	143	Pilot and Copilot Seat Back Stop Mechanism: Inspect for loose or missing hardware and proper condition.		
ALL	144	Portable Fire Extinguishers: Inspect for proper pressure, condition, and security of installation. Check required service date.		
ALL	145	Stall Warning Horn and Stall Warning Horn Relay: Inspect the warning horn and relay for proper condition, security of installation, and signs of damage. Inspect horn grill cover for proper condition and security of installation. (Ground check only.)		
ALL	146	Squat Switch (If Equipped): Inspect squat switch for proper operation, condition, security, and signs of damage.		
ALL	147	Stall Warning Computer (If Equipped): Inspect for security of attachment, damage, and proper operation.		

DOI - KODIAK 100 SERIES - 400 HOUR INSPECTION

ACFT TYPE		400 HOUR INSPECTION REQUIREMENTS	MECH	INSP
ALL	148	Control Column: Inspect control column assembly forward and aft of the instrument panel for condition and security of installation. Operate the control wheel in all directions while inspecting all moving components to verify proper operation and freedom of movement. Inspect bearing and wear surfaces for proper condition. Replace as needed.		
ALL	149	Rudder Control System: Check connections for security and fastener torques where applicable.		
ALL	150	Electric Rudder Trim and Indicator: Inspect the trim system for proper condition and security of installation. Operate the trim to verify proper operation, freedom of movement and full range of motion. Check that the trim system contacts the limit switches prior to hitting the hard stops on the bungee collar. Verify the indicator functions properly.		
ALL	151	Rudder Cables (Fuselage): Inspect for deterioration. Inspect the cables for chafing, fraying, cleanliness, turnbuckle safetying, and proper routing. Inspect pulleys and cable guards for wear, proper condition, security of installation, and signs of corrosion.		
ALL	152	FWD Elevator Sector: Inspect the forward elevator sector, bearings, pushrod, brackets, and stop bolts for corrosion, evidence of damage, failed fasteners, and security of installation; proper safetying of bellcrank; inspect pushrod bolts for proper safetying of nuts with cotter pins.		
ALL	153	Flap Control System: Inspect the flap control lever for proper condition, security of installation, travel, and signs of damage.		
ALL	154	Fuel Reservoir Bladder: Inspect bladder and plumbing for signs of leakage, proper condition, and security of installation.		
ALL	155	Fuel Selector Controls and Linkages in Cabin: Inspect linkage and controls for proper operation, condition, and security of installation.		
ALL	156	Firewall Fuel Shutoff Valve: Inspect linkage and valve for signs of damage and proper operation. Inspect valve for leakage. Inspect security and condition of hardware that connect the push-pull cable to the shutoff valve.		
ALL	157	Instrument Panel Mounted Avionics Units: Clean as outlined in Section 8 of the POH/AFM.		
ALL	158	Radio and electronic equipment - for improper installation and insecure mounting.		
ALL	159	Wiring and conduits - for improper routing, insecure mounting, and obvious defects.		
ALL	160	Bonding and shielding - for improper installation and pooor condition.		
ALL	161	Antenna including trailing antenna - for poor condition, insecure mounting, and improper operation.		
ALL	162	Pitot and Static Drain Valves: Inspect for proper operation, security and signs of damage. Visually inspect for leaks and presence of water in valve. Drain any accumulated water.		
ALL	163	Cargo Door Entrance Steps: Inspect for proper condition and security of installation. Lubricate the cargo door step hinge points with LPS 1.		
ALL	164	Crew Door Hinges: Lubricate the crew door hinge points with LPS 1.		
ALL	165	Windshield and Windows: Inspect for proper condition, security of installation and debond areas. Inspect pilot's storm window for proper operation and sealing.		
ALL	166	ELT: Inspect for security of installation, condition of electrical components and position of the function switch. Inspect the ELT structure for corrosion. Check cumulative time and useful life of battery in accordance with 14 CFR Part 91.207.		
ALL	167	Rudder Cables (Aft Fuselage): Inspect for deterioration. Inspect the cables for chafing, fraying, cleanliness, turnbuckle safetying, and proper routing. Inspect pulleys and cable guards for wear, proper condition, security of installation, and signs of corrosion.		
ALL	168	Elevator Cables (Aft Fuselage): Inspect cables in tailcone for fraying, chafing, cleanliness, turnbuckle safetying, and proper routing. Inspect pulleys and their guard pins for wear, corrosion, proper condition, and security of installation.		
ALL	169	Rudder: Inspect the rudder hinges for cracks, proper condition, and security of installation. Inspect the hinge bolts, hinge bearings, hinge attach fittings, and bonding jumpers for evidence of damage or unusual wear. Inspect for failed fasteners and proper safetying of nuts with cotter pins. Inspect the rudder skins for cracks and loose rivets. Inspect balance weight for security and condition.		
ALL	170	Elevator: Inspect elevator skins for cracks, condition, and loose rivets; elevator hinges for condition, security, and cracks; and hinge bolts, hinge bearings, torque tube horn, attach fittings, and bonding jumpers for evidence of damage or unusual wear, failed fasteners, and security of installation. Inspect elevator hinge bolts for proper safetying of nut with cotter pins. Inspect supporting structure for signs of damage. Inspect balance weights for security and condition.		
ALL	171	Elevator Trim Tabs: Inspect the trim tab skins for cracks, loose rivets, and security of installation. Inspect the trim tab hinge for security, cracks, and corrosion. Inspect the hinge pin for properly centered installation. Inspect the pushrods for security and any signs of damage. Inspect the pushrod bolts for proper condition and safetying of nuts with cotter pins. Lubricate the trim tab piano hinges with LPS 1.		

DOI - KODIAK 100 SERIES - 400 HOUR INSPECTION

ACFT TYPE		400 HOUR INSPECTION REQUIREMENTS	MECH	INSP
ALL	172	Elevator Trim Tab Actuators: Inspect for proper condition and security of installation. Inspect attaching hardware for excessive wear and security. Perform elevator trim tab free-play inspection (maximum play allowed is 0.080”).		
ALL	173	Elevator Trim Tab Cables (Tailcone): Inspect cables for chafing, fraying, proper safetying of turnbuckles, cleanliness, and proper routing. Inspect chains for proper safetying at all locations and chains for proper alignment on their sprockets. Inspect pulleys and cable guards for proper condition, wear, corrosion, and security of installation.		
ALL	174	Vertical and Horizontal Stabilizers: Inspect the structures and their attach points for security and condition. Inspect vortex generators for condition and security.		
ALL	175	Static Discharge Wicks and Control Surface Bonding Straps: Inspect for proper condition and security of installation. Perform High Resistance Check.		
ALL	176	Wing Electrical Wiring: Inspect for chafing, overheating, proper condition, and security of installation at electrical connections and support clamps.		
ALL	177	Flight Control Systems Rod End Connections: Check for proper condition and freedom of movement. Lubricate with LPS 1.		
ALL	178	Ailerons: Inspect aileron hinges for proper condition, cracks, and security of installation. Inspect the hinge bolts, hinge bearings, hinge attach fittings, and bonding jumpers for evidence of damage, unusual wear, failed fasteners, and security of installation. Inspect the aileron skins for cracks and loose rivets. Inspect balance weights for security and condition.		
ALL	179	Aileron Trim Tab: Inspect the trim tab skin for cracks, loose rivets, and security of installation; trim tab hinges for security of installation and signs of damage; hinge pin for proper installation in hinge pin		
ALL	180	Flap Actuator Assemblies and Flap Gap Seals (Wing): Inspect for proper condition and security of installation of the wing flexible shafts. Inspect the flap actuator support structures for proper condition and security of installation. Inspect the fuselage gap seal assemblies for security and condition.		
ALL	181	Wing Fuel Tanks: Inspect for fuel stains or any evidence of fuel leaks. Check drain/vent holes in the lower wing skins just outboard of the wing tanks for signs of leakage and for cleanliness.		
ALL	182	Fuel Tank Filler Caps and Flapper Valves: Inspect for broken components or other damage. Check filler cap locking position and security of installation.		
ALL	183	Fuel Drain Valves: Check for proper operation and inspect for corrosion, leakage and proper sealing action.		
ALL	184	Fuel Selector Valves and Linkages: In the wing root area, inspect shutoff valves, controls and linkages for security, condition and signs of damage.		
ALL	185	Fuel Vent Lines (Wings): Inspect for signs of damage, obstructions, and cleanliness.		
ALL	186	Pitot/Static Tubes: Visually inspect tubes and static ports for obstructions. Inspect pitot masts for damage, security, and general condition.		
ALL	187	Stall Warning Lift Sensor (Vane-type or Lift Transducer, as equipped): Inspect for proper condition and security of installation.		
ALL	188	Wings: Inspect for loose rivets and fasteners, corrosion, cracks, wrinkles, and dents. If so equipped, inspect vortex generators for condition and security. Inspect attach points for proper security and condition.		
ALL	189	Wing Strut: Inspect for security, condition, and signs of damage.		
ALL	190	Wing Access Panels: Inspect for signs of damage and security of installation.		
ALL	191	Wing Spar Attach Fittings: Inspect bolts for proper security and installation.		
ALL	192	Wing Strut Fittings: Inspect attach bolts for security and condition.		
ALL	193	Main Landing Gear System: Inspect for general condition and security. Check that there is no freeplay between the landing gear legs and trunnion. Check for security of nuts and cotter pin placement on trunnion mounting studs. Check for proper condition and any signs of damage at trunnion and gear legs. Lubricate the trunnion assemblies with Aeroshell Grease 22. See appropriate manual for Main Landing Gear Free-Play Check. ****Caution** DO NOT** pump more than three pumps of grease in the end caps. Inserting excessive amounts of grease into the end caps will pressurize the end caps which can damage the surrounding structure.		
ALL	194	Nose Gear Shock Strut: Inspect for evidence of leakage and proper extension. Service as necessary. Inspect strut barrel for pitting and corrosion. Inspect for general condition and cleanliness. Wipe the nose strut chrome tube with a cloth lightly damp with MIL-H-5606 hydraulic fluid.		
ALL	195	Brake Assemblies: Check brake lining wear, check disk for proper condition and any warping. Inspect for signs of leakage.		
TITLE:		Brake Inspection		

DOI - KODIAK 100 SERIES - 400 HOUR INSPECTION

		MECH	INSP
INSPECTION INSTRUCTIONS	1. Disassemble the brake as instructed in applicable Kodiak Manual.		
	2. Inspect the brake linings for deterioration. Ensure the wear is within the limits.		
	3. Replace the brake linings if worn to 0.100 inch or less.		
	4. Inspect the brake cylinder bores for signs of scoring and deterioration. Replace the cylinder assembly if the cylinders are scored.		
	5. Replace all packings, back-up rings, and O-rings when reassembling the brakes.		
	6. Reassemble the brake as instructed in applicable Kodiak Manual.		

ACFT TYPE		**400 HOUR INSPECTION REQUIREMENTS**	MECH	INSP
ALL	196	Nose Landing Gear Tire and Wheel: Inspect for proper inflation pressure, wear and condition of tire. Inspect wheel for security of installation and condition.		
ALL	197	Main Landing Gear Tires and Wheels: Inspect for proper inflation pressure, wear, and condition of tire. Inspect wheel for security of installation and condition.		
ALL	198	Nose Landing Gear Wheel Bearings: Inspect for proper condition and repack. Lubricate the bearings with Mobil SHC 100 as instructed below.		
TITLE:		Brake Disk Inspection and Servicing		

		MECH	INSP
INSPECTION INSTRUCTIONS	**NOTE:** Under normal operations the brake disc should provide years of trouble-free service, however, operations in and out of unimproved strips, standing water, heavy industrial pollution, or infrequent use of the aircraft will require more frequent inspection of the brake discs in an effort to prolong the life of the brake linings.		
	A. Brake Disc Inspection: Check the disc for warping, disc faces for unusual wear beyond the minimum thickness of 0.537 inch. Check for grooves, deep scratches, excessive pitting corrosion, and coning of the brake disc. Coning in excess of 0.015 in either direction is cause for replacement. Isolated groves are considered allowable up to 0.030 inch deep. Heat checking is considered to be just superficial surface cracks and not hinder brake performance. However, break replacement is necessary if any single crack is longer than 0.50 inch, or deeper than 0.25 inch. Replace the brake disc if more than three cracks are discovered on a disc. Replace the brake disc if more than one crack is found in a 90 degree quadrant of the disc.		
	B. Brake Servicing: Rust will occur on the disc surfaces to a certain degree, and this is allowable. If powdery rust appears on the disk, normal taxiing and braking operation will remove this from the surface. If the rust is allowed to progress beyond the point where braking operation will remove it, it may be necessary to remove and clean both surfaces. Wire brushing by hand, followed by an application of 220 grit sandpaper can restore the brake disk surfaces to proper condition for use.		

ACFT TYPE		**400 HOUR INSPECTION REQUIREMENTS**	MECH	INSP
ALL	199	Main Landing Gear Wheel Bearings: Inspect for proper condition and repack. Lubricate the bearings with Mobil SHC 100 as instructed below.		
TITLE:		Wheel Bearings		

		MECH	INSP
INSPECTION INSTRUCTIONS	A. Wheel Bearings Removal:		
	1. Remove the snap rings, grease retainer seal, and the tapered roller bearing from the inboard wheel half.		
	2. Remove the snap ring, grease retainer seal, and the tapered roller bearing from the outboard wheel half.		
	NOTE: The bearing cups are press-fit into the wheel halves and should not be removed unless it is necessary to replace them.		
	3. For replacement of the bearing cup, heat the wheel half in boiling water for 15 minutes.		
	4. Press the bearing cup out with an arbor press, and press in a bearing cup while the wheel half is still hot.		
	B. Wheel Bearings Installation:		
	1. Before installation, grease bearings in accordance with the Cleveland Brakes Component Maintenance Manual.		
	2. Replace the tapered roller bearing, grease retainer seal, and the snap ring onto the outboard wheel half.		

	MECH	INSP
3. Replace the tapered roller bearing, grease retainer seal, and the snap ring onto the inboard wheel half.		

ACFT TYPE		400 HOUR INSPECTION REQUIREMENTS	MECH	INSP
ALL	200	Shimmy Damper: Inspect for proper condition, security, and signs of leakage (if applicable). Lubricate the shimmy damper pivot points with LPS 1.		
ALL	201	Steering Bungee: Check for the security of threaded rod end into the bungee housing. Check for the security of the band clamp securing the steering bungee and the bungee adjuster. Lubricate the rod end with LPS 1.		
ALL	202	Perform a transient voltage suppressor inspection (if GFC 700 equipped) as instructed below.		
TITLE:		Transient Voltage Suppressor Inspection		

		MECH	INSP
INSPECTION INSTRUCTIONS	**WARNING:** Damage can occur to the GRS or GMU if insulation resistance voltage is applied to the GRS or GMU.		
	A. Place the master switch in the OFF position.		
	B. Disconnect the following connectors from the associated equipment.		
	1. 1P771 from GRS77 #1		
	2. 2P771 from GRS77 #2		
	3. P501 from RH wing root		
	4. P601 from LH wing root		
	5. 1P441 from GMU44 #1		
	6. 2P441 from GMU44 #2		
	C. Conduct insulation resistance tests.		
	1. Configure the insulation tester for a 50 volt test and measure the insulation resistance between the following pins. Measured insulation resistance must be greater than 40 Meg Ohms.		
	a. GRS77 #1, connector 1P771 pins 9 and 40		
	b. GRS77 #2, connector 2P771 pins 9 and 40		
	c. GMU44 #1, connector 1P441 pins 9 and 6		
	d. GMU44 #2, connector 2P441 pins 9 and 6		
	2. Configure the insulation tester for a 100 volt test and measure the insulation resistance between the following pins. Measured insulation resistance must be less than 0.200 Meg Ohms.		
	a. GRS77 #1, connector 1P771 pins 9 and 40		
	b. GRS77 #2, connector 2P771 pins 9 and 40		
	c. GMU44 #1, connector 1P441 pins 9 and 6		
	d. GMU44 #2, connector 2P441 pins 9 and 6		
	D. Replace any TVS units that fail either resistance test. See appropriate Kodiak Manual.		
	E. After all TVS devices satisfy the inspection requirements, reconnect the following connectors to the associated equipment.		
	1. 1P771 to GRS77 #1		
	2. 2P771 to GRS77 #2		

	MECH	INSP
3. P501 to RH wing root		
4. P601 to LH wing root		
5. 1P441 to GMU44 #1		
6. 2P441 to GMU44 #2		

ACFT TYPE		400 HOUR INSPECTION REQUIREMENTS	MECH	INSP
ALL	203	Perform a lightening protection resistor inspection (if GFC 700 equipped)		
TITLE:		Lightening Protection Resistor Inspection		

		MECH	INSP
INSPECTION INSTRUCTIONS	A. Place the Master switch in the OFF position		
	B. Disconnect the following connectors from the associated equipment		
	1. 1P771 from GRS 77 #1		
	2. P601 from J601		
	3. 2P771 from GRS 77 #2		
	4. P501 from J501		
	5. 1P603 from GIA #1		
	6. 2P603 from GIA #2		
	7. 4P801 from Pitch Trim Servo		
	8. 2P801 from Roll Servo		
	9. 1P441 from GMU #1		
	10. 2P441 from GMU #2		
	C. Conduct resistance tests.		
	NOTE: Subtract out the resistance of the test leads.		
	1. Measure resistance between GRS #1 connector 1P771 pin 10 and connector P601 pin M. Resistance should be between 2.2 ohms and 3.4 ohms.		
	2. Measure resistance between GRS #2 connector 2P771 pin 10 and P501 pin D (SN 100-0120 and up) or pin 4 (SN 100-0001 - SN 100-0119). Resistance should be between 2.2 ohms and 3.4 ohms.		
	3. Measure resistance between connector 1P603 pin 4 and connector P601 pin U. Resistance should be between 3.2 ohms and 4.5 ohms.		
	4. Measure resistance between connector 1P603 pin 6 and connector P601 pin Y. Resistance should be between 3.2 ohms and 4.5 ohms.		
	5. Measure resistance between connector 2P603 pin 4 and connector P601 pin GG. Resistance should be between 3.2 ohms and 4.5 ohms.		
	6. Measure resistance between connector 2P603 pin 6 and connector P601 pin HH. Resistance should be between 3.2 ohms and 4.5 ohms.		
	7. Measure resistance between connector 4P801 pin J and connector P601 pin U. Resistance should be between 3.4 ohms and 4.7 ohms.		
	8. Measure resistance between connector 4P801 pin T and connector P601 pin Y. Resistance should be between 3.4 ohms and 4.7 ohms.		
	9. Measure resistance between connector 4P801 pin S and connector P601 pin GG. Resistance should be between 3.4 ohms and 4.7 ohms.		
	10. Measure resistance between connector 4P801 pin E and connector P601 pin HH. Resistance should be between 3.4 ohms and 4.7 ohms.		

	MECH	INSP
11. Measure resistance between connector 2P801 pin J and connector J601 pin U. Resistance should be between 3.1 ohms and 4.4 ohms.		
12. Measure resistance between connector 2P801 pin T and connector J601 pin Y. Resistance should be between 3.1 ohms and 4.4 ohms.		
13. Measure resistance between connector 2P801 pin S and connector J601 pin GG. Resistance should be between 3.1 ohms and 4.4 ohms.		
14. Measure resistance between connector 2P801 pin E and connector J601 pin HH. Resistance should be between 3.1 ohms and 4.4 ohms.		
15. Measure resistance between connector 1P441 pin 4 and connector J601 pin L. Resistance should be between 2.2 ohms and 3.4 ohms.		
16. Measure resistance between connector 1P441 pin 2 and connector J601 pin S. Resistance should be between 2.2 ohms and 3.4 ohms.		
17. Measure resistance between connector 1P441 pin 8 and connector J601 pin M. Resistance should be between 2.2 ohms and 3.4 ohms.		
18. Measure resistance between connector 2P441 pin 4 and connector J501 pin L. Resistance should be between 2.2 ohms and 3.4 ohms.		
19. Measure resistance between connector 2P441 pin 2 and connector J501 pin S. Resistance should be between 2.2 ohms and 3.4 ohms.		
20. Measure resistance between connector 2P441 pin 8 and connector J501 pin D (SN 100-0120 and up) or pin 4 (SN 100-0001 - SN 100-0119). Resistance should be between 2.2 ohms and 3.4 ohms.		

ACFT TYPE		**400 HOUR INSPECTION REQUIREMENTS**	MECH	INSP
ALL	204	Inspect each installed miscellaneous item that is not otherwise covered by this listing for improper installation and improper operation.		

ACFT TYPE		**400 HOUR INSPECTION REQUIREMENTS TKS ICE PROTECTION SYSTEM INSPECTION**	MECH	INSP
ALL	205	Porous Panels and Windshield Nozzles - Inspect for proper condition and security.		
ALL	206	Porous Panels and Windshield Nozzles - Operate system to check for even flow from all panels. Inspect for leaks from sealed areas.		
ALL	207	Propeller Slinger - Inspect for proper condition and security of installation. Check fluid lines for leaks with the system operating. Check for proper routing/aim of nozzles. Ensure the fluid is discharging into ring from nozzle fitted at front of engine.		
ALL	208	Propeller Nozzle (Aircraft to Propeller Slinger) - Inspect that nozzle is positioned to direct a stream of fluid into propeller slinger with system operating on HIGH.		
ALL	209	Ice Inspection Lights - Inspect lights and electrical connections for proper operation and security of installation. Ensure that the orientation of the ice lights provide adequate illumination of the wings' leading edge.		
ALL	210	Stall Warning Lift Transducer Heat Check - Perform inspection as instructed below.		
TITLE:		Lift Transducer Functional Heat Test		

		MECH	INSP
INSPECTION INSTRUCTIONS	**CAUTION:** On airplanes equipped with a heated lift transducer, the lift transducer and the area around the lift transducer may be hot enough to instantly burn skin, burn or melt clothing and or objects touching it. Do not touch the lift transducer or surrounding area until it has cooled.		
	CAUTION: The heaters will quickly overheat in "Air" mode. Only allow five seconds MAX to perform the test.		
	1. Ensure left pitot cover is removed.		
	2. Apply ground power to the airplane.		
	3. Move the MASTER switch to ON.		
	4. Move the left Pitot Heat switch to ON.		
	5. Allow 5 minutes for heating element to reach equilibrium.		
	6. Use an infrared thermometer to verify the lift transducer vane and mounting plate are hot and mounting plate measures > 100º.		
	7. Set the aircraft in "Air" mode.		

DOI - KODIAK 100 SERIES - 400 HOUR INSPECTIONS

	MECH	INSP
NOTE: Set the aircraft in “Air” mode by removing the floorboards and depressing the Weight-On-Wheels plunger.		
8. Allow 5 seconds only for heating element to show temperature increase.		
CAUTION: The heaters will quickly overheat in “Air” mode. Only allow five seconds MAX to perform the test.		
9. Use an infrared thermometer to verify the lift transducer vane and mounting plate increase in temperature.		
10. Remove aircraft from “Air” mode.		
11. Move the left Pitot Heat switch to OFF.		
12. Move the MASTER switch to OFF.		
13. Remove ground power to the airplane.		
14. Replace left pitot cover.		

ACFT TYPE		SUPPLEMENTAL 400 HOUR INSPECTION REQUIREMENTS EXTERNAL CARGO COMPARTMENT INSPECTION	MECH	INSP
ALL	211	External Cargo Compartment - Inspect security of installation, and condition of structure. Check condition of seal between external cargo compartment and fuselage and any evidence of internal leakage.		
ALL	212	EPA and Oil Drain Sump Cans: (If Equipped) Inspect can for leakage, condition, and security of installation. Completely drain can.		
ALL	213	External Cargo Compartment EPA Can Drain Lines - Inspect the EPA Can drain lines for condition, security and obstructions.		
ALL	214	External Cargo Compartment FOD Ducting - Inspect for damage, wear, and security of installation.		
ALL	215	External Cargo Compartment EPA Can/Ejector Assembly: (If Equipped) Inspect assembly for leakage, condition, and security of installation. Completely drain can. Ensure that the alternate vent at the top of the ejector assembly is clean and free from debris.		
ALL	216	External Cargo Compartment Doors - Inspect the structure of the doors for condition, and damaged laminate. Check door seal for condition and proper installation.		
ALL	217	External Cargo Compartment Door Hinges and Latches - Inspect for damage, wear, security of installation and condition of fasteners. Lubricate the external cargo compartment door hinges with LPS 2.		
ALL	218	External Cargo Compartment Fuel Drain Lines - Check drain lines and valves for evidence of leakage and proper operation.		
ALL	219	External Cargo Compartment Placards - Check placard legibility.		
ALL	220	External Cargo Compartment Blankets - Inspect for damage, wear and security of installation.		
ALL	221	Ventral Fins - Inspect for damage, wear and security of installation.		
ALL	222	Strakes - Inspect for damage, wear and security of installation.		
ALL	223	Vapor Cycle System - Inspect evaporators and condenser air inlets and exhausts for obstructions or debris. Inspect system for evidence of damage, leaks and security of installation.		
ALL	224	Compressor - Inspect for security of installation, visible wear/cracking in both the compressor body and mounting hardware.		
ALL	225	Vapor Cycle System Compressor Belt - Inspect for wear, tension and alignment.		

ACFT TYPE		SUPPLEMENTAL 400 HOUR INSPECTION REQUIREMENTS GARMIN GWX 68 WEATHER RADAR INSPECTION	MECH	INSP
ALL	226	Radome and Radome/Wing Attachment (If Equipped): Inspect for security of installation and proper condition. Ensure that there are no cracks in the dome, mount, or reinforcement.		
ALL	227	Wing Skin at attach Point (If Equipped): Inspect for security of installation and proper condition. Ensure that the UHMW tape is installed between the mount/wing skin and reinforcement/wing skin.		

ACFT TYPE		400 HOUR INSPECTION REQUIREMENTS	MECH	INSP
ALL	228	Compressor Wash: Inspect wash ring for condition and security of installation. Perform a compressor wash.		

Interval	Item	Location	Lubricant
400 hr	Flap Tracks	Flaps	LPS 1® Greaseless Lubricant
400 hr	Fresh Air Inlet Valve	Engine Compartment	LPS 1® Greaseless Lubricant
400 hr	Elevator Sector Lower Rod End Connection	Tailcone	LPS 1® Greaseless Lubricant
400 hr	Propeller Hub	Propeller	Service with identical grease as previously used.

ACFT TYPE		400 HOUR INSPECTION REQUIREMENTS	MECH	INSP
ALL	229	Compressor Wash: Inspect wash ring for condition and security of installation. Perform a compressor wash.		
TITLE:		Turbine Blade Wash Procedures		

		MECH	INSP
INSPECTION INSTRUCTIONS	**NOTE:** Adhere to the following starter limitations for motoring the engine.		

Starter Options	Time ON	Time OFF
Lo/Motor	30 seconds	60 seconds
Lo/Motor	30 seconds	60 seconds
Lo/Motor	30 seconds	30 minutes

	MECH	INSP
NOTE: A minimum cool-down period of 40 minutes is recommended after engine running before injecting rinse fluid.		
NOTE: Compressor turbine blade washing is to be accomplished using potable water only at an ambient temperature of above 36°F. A potable water/methanol solution may be used with ambient temperatures below 36°F. See the P&W Maintenance Manual for appropriate solution strengths with varying ambient temperatures.		
1. Remove upper and lower forward cowlings.		
2. Place a suitable pan beneath the engine to recover wash solution.		
3. Remove one of the two igniter plugs.		
4. Install spray tube P/N PWC32271 in the igniter plug boss and tighten spray tube finger tight. Make sure the arrow on the tab of the spray tube is directed toward the propeller reduction gearbox and is parallel with the engine centerline.		
CAUTION: The cleaning solution supply hose should be supported in order to prevent damage to the spray tube.		
5. Connect a hose from a suitable cleaning rig to the spray adapter. The water/solution mixture should be delivered to the engine at 40 psi.		
6. Verify the engine ignition switch and engine bleed air is in the OFF position.		
7. Begin motoring the engine with the starter for 30 seconds; when the NG reaches 5%, introduce the wash solution to the engine.		
NOTE: Approximately ½ gallon of rinse solution will be consumed through the compressor turbine during a 30-second cycle.		
CAUTION: When using a water/methanol solution, perform an additional 30 seconds of dry motoring after each washing cycle to purge the engine of the volatile methanol fumes. Make sure recommended starter cooling periods of 40 minutes is observed.		
8. Repeat the washing cycle as required to remove contaminants from the turbine blades.		
9. Remove the spray tube assembly and reinstall the igniter plug.		
10. Perform two consecutive dry motoring runs while making sure the starter motoring limitations are not exceeded.		
11. Reinstall all engine cowlings.		

DOI - KODIAK 100 SERIES - 400 HOUR INSPECTIONS

ZONE	ACFT TYPE		SUPPLEMENTAL 400 HOUR INSPECTION REQUIREMENTS	MECH	INSP
ARCTIC	ALL	230	Floats - Inspect as required by OEM ICAs.		
ARCTIC	ALL	231	Skis - Inspect as required by OEM ICAs.		
ARCTIC	ALL	232	De-ice/Anti-ice System - Inspect as required by OEM ICAs.		
ARCTIC		233			
ARCTIC		234			
ARCTIC		235			
ARCTIC		236			
ARCTIC		237			
ARCTIC		238			
ARCTIC		239			
ARCTIC		240			
ARCTIC		241			
ARCTIC		242			
ARCTIC		243			
TEMPERATE	ALL	244	Floats - Inspect as required by OEM ICAs.		
TEMPERATE	ALL	245	Skis - Inspect as required by OEM ICAs.		
TEMPERATE	ALL	246	De-ice/Anti-ice System - Inspect as required by OEM ICAs.		
TEMPERATE		247			
TEMPERATE		248			
TEMPERATE		249			
TEMPERATE		250			
TEMPERATE		251			
TEMPERATE		252			
TEMPERATE		253			
TEMPERATE		254			
TEMPERATE		255			
TEMPERATE		256			
TEMPERATE		257			
TEMPERATE		258			
	ALL	259	All panels opened for the inspection are closed and secure.		
	ALL	260	Run aircraft engine and leak check.		

DOI - KODIAK 100 SERIES - 400 HOUR INSPECTIONS

NOTES:

ASSURE PROPER MAINTENANCE RECORD ENTRIES HAVE BEEN MADE IAW 14 CFR 43.9

THE AIRCRAFT RECORDS CONSIST OF THE FOLLOWING;

1. AIRCRAFT, ENGINE & PROPELLER HARD LOGS.
2. ALL FORM 337'S, MAJOR REPAIR & ALTERATION.
3. COMPLIANCE LIST OF ALL PERTINENT AIRWORTHINESS DIRECTIVES.
4. MAINTENANCE SCHEDULE- LIST OF REQUIRED SPECIAL INSPECTIONS, COMPONENT OVERHAUL & TIME-LIFE LIMITS.
5. CURRENT & HISTORICAL WEIGHT & BALANCE STATUS & EQUIPMENT LIST
7. MINIMUM EQUIPMENT LIST AS REQUIRED.
8. SPECIAL FLIGHT AUTHORIZATIONS AND/OR SUPPLEMENTS

UNITED STATES DEPARTMENT OF THE INTERIOR

KODIAK 100 SERIES

ANNUAL MAINTENANCE CHECKS

THE INSPECTION WORK SHEETS / PACKAGES IN THIS DOCUMENT ARE FOR THE 'UNITED STATES DEPARTMENT OF THE INTERIOR' AIRCRAFT ONLY.

Inspection Sheet - Block Explanation

Example

ACFT TYPE		EXAMPLE INSPECTION REQUIREMENTS	MECH	INSP
ALL	1	PY and P3 Line Heater Check: Perform an operational check of PY and P3 heaters.		
ALL	2	Conduct engine run-up checks as described below.		
ALL	3	EPA and Oil Drain Sump Cans: (If Equipped) Inspect can for leakage, condition, and security of installation. Completely drain can.	N/A	
A	**B**	**C**	**D**	**E**

Block A All - All Kodiak 100 Series aircraft.

Block B Each inspection and task is given a line item number in the 2nd column.

Block C Describes inspection tasks.

Block D Mechanic sign-off block.
N/A (Not Applicable) - should be used if the inspection cannot or should not be carried out due to (but not limited to) -

1. Serial number range.
2. Unit or option not installed on aircraft.
3. Previously complied with.
4. Climate zone applicability.

A note beside the N/A to indicate the reason for it is recommended.

Block E
The (white) INSP block should be initialed by an inspector who witnessed the task carried out by the mechanic and completed a final inspection and/or functional check in accordance with the line item requirements and relevant technical publications. The inspector shall not initial the INSP block until after the mechanic has initialed the MECH block. In a block that requires a Maintenance Inspector, he shall initial the white INSP block whenever N/A has been entered in the MECH block.

Climate Zone Supplemental Inspections and Servicing

Before commencing inspection and servicing, it must be confirmed which climate zone the subject aircraft is operated in. If the aircraft is above the 49th parallel it is in the Arctic Zone. If the aircraft is below the 49th parallel it is in the Temperate zone. The extra line items listed for the appropriate climate zone shall be added to the servicing, the not applicable climate zone line items shall be noted as N/A in the sign-off block.

Inspections: To be completed in accordance with this manual.

Repairs: To be completed in accordance with the appropriate Kodiak Maintenance Manual.

Acronyms in use

SID - Supplemental Inspection Document

CPCP - Corrosion Prevention and Control Program

NDI - Non Destructive Inspection

ICA - Inspection for Continued Airworthiness

STC - Supplemental Type Certificate

PSE - Principle Structural Element

N/A - Not Applicable (see MECH Block D above)

OEM - Original Equipment Manufacturer

IAW - In Accordance With

DOI - KODIAK 100 SERIES - ANNUAL INSPECTION

'N' NUMBER:_____ MODEL: _____ AIRCRAFT S/N:_____

TACH HOURS:_____ AIRCRAFT TOTAL TIME:_____ ENG. SMOH:_____ PROP SMOH:_____

ACFT TYPE		ANNUAL INSPECTION REQUIREMENTS	MECH	INSP
ALL	1	Inspect aircraft records to verify that all SID Inspections have been complied with as scheduled.		
ALL	2	Inspect aircraft records to verify that all applicable Service Information Letters, Service Bulletins and Supplier Service Bulletins are complied with.		
ALL	3	Inspect aircraft records to verify that all applicable ICAs are complied with.		
ALL	4	Inspect aircraft records to verify that all applicable Airworthiness Directives and Federal Aviation regulations are complied with.		
ALL	5	Inspect aircraft records to verify that all logbook entries required by the Federal Aviation regulations are complied with.		
ALL	6	Remove cowling, inspection plates, and all fairings as necessary to perform the inspections called for on this form. Thoroughly clean the aircraft and engine.		

TITLE:	Window and windshield Cleaning Procedures	MECH	INSP
INSPECTION INSTRUCTIONS	**CAUTION:** Windows and windshields are easily damaged if handled improperly.		
	1. Position the aircraft inside a hangar or another suitable location to allow the aircraft surface to remain cool and out of direct sunlight.		
	2. Flood the window with clean water and feel by hand (jewelry removed) for potentially abrasive materials on the window surface.		
	3. Remove any abrasive matter from window surface by hand.		
	4. Wash the window surface with mild soap or detergent mixed with water. A clean cotton cloth may be used to transfer the soapy solution to the window surface but use extreme care to prevent scratching of the window surface.		
	5. If the contaminants on the surface of the window cannot be removed by the solution of mild soap and water, Type II Aliphatic Naphtha may be used as a cleaning agent. Apply the Type II Aliphatic Naphtha with a soft clean cotton cloth, and frequently refold the cloth to avoid scratching the windshield with any abrasive particles.		
	6. Rinse the window surface thoroughly with clean water and dry with a clean cotton cloth.		
	7. Hard polishing wax may be applied to the acrylic window surfaces using a clean soft cotton cloth. The polishing wax will mask most shallow scratches on the window surface.		

TITLE:	Aluminum Surface Cleaning Procedures	MECH	INSP
INSPECTION INSTRUCTIONS	Aluminum surfaces do not require extensive maintenance, but should not be neglected. The aircraft should be washed with clean water in order to remove any collected dirt. Non-alkaline grease solvents may be used to aide in the removal of oil and grease. There are various commercial grade cleaners available for aluminum surfaces.		

TITLE:	External Painted Surface Cleaning Procedures	MECH	INSP
INSPECTION INSTRUCTIONS	A. The painted surfaces on the aircraft can normally be kept bright by washing with a solution of soap and water, followed by a water-rinsing and then dried off with a clean dry cloth or chamois. Abrasive soaps or detergents should never be used due to their tendency to cause corrosion. Stubborn oil or grease spots can be removed with a cloth moistened with Stoddard solvent. Follow any cleaning procedure with a thorough rinse of the aircraft.		
	CAUTION: If equipped with the TKS Ice Protection System, don't polish the surface of the porous panels. Polish on the porous panels impairs the wetting qualities of the TKS and may degrade ice protection efficiency. Polishing may also block pores in the panels. See the TKS Ice Protection System Instructions for Continued Airworthiness.		

		MECH	INSP
	B. To seal any minor scratches or chips and to protect the aircraft skins against corrosion, the aircraft should be waxed on a regular basis. A quality grade automotive wax containing a carnauba base should be used, and should be applied in accordance with the manufacturer's instructions. If the aircraft is operated around coastal waters or other salt water environments, it must be washed and waxed on a more frequent basis to help fight corrosion. Special attention should be given to protect and seal around the rivet heads, skin laps, piano hinges, and any other area susceptible to corrosion. A heavier coating of wax should be applied on the wing and tail leading edges, the engine cowling nose area, and the propeller spinner to help reduce abrasive wear in these areas. However, don't polish or wax porous panels on the leading edges of airplanes equipped with the TKS Ice Protection System. (See caution above.) Wax should be reapplied after cleaning the aircraft.		

TITLE:	Engine Compartment Cleaning

		MECH	INSP
INSPECTION INSTRUCTIONS	A. Washing of the engine and its accessories should be accomplished routinely in order to remove oil, grease, corrosive salts, and other residue. A periodic cleaning should be accomplished during inspection periods to aid in discovering defects.		
	B. Protective equipment and clothing such as, a face shield, coveralls, and chemically-resistant gloves should be worn when working with strong cleaning agents. Use the least toxic cleaning agent that will effectively accomplish the task at hand.		
	CAUTION: Cover the aircraft's propeller in order to prevent any alkaline cleaner from coming in contact with it during washing procedures.		
	CAUTION: Do not use gasoline or other highly flammable materials for washing the aircraft or any of its components.		
	CAUTION: Do not wash the engine while it is still hot or while it is running. Allow the engine to cool down prior to cleaning.		
	C. Cleaning procedures should be performed in a well-ventilated area and fire fighting equipment should be readily available. No smoking and no open flames should be allowed within a 100 foot radius of the cleaning area. Compressed air should be set at the lowest effective pressure for use in drying, or as a cleaning agent. Steel wire brushes should not be used for cleaning the aircraft; a stiff, nylon or similar bristle brush may be used if one is needed to remove grease and grime.		

ACFT TYPE		**ANNUAL INSPECTION REQUIREMENTS**	MECH	INSP
ALL	7	Conduct engine run-up checks as instructed below.		

TITLE:	Engine Run-up Checks and Tests

		MECH	INSP
INSPECTION INSTRUCTIONS	A. The following checklist is provided for performing engine run-ups for routine maintenance and inspection procedures.		
	CAUTION: Start and operate the engine per the Pilot's Operating Handbook/FAA Approved Flight Manual. Observe all power plant operating limitations.		
	NOTE: Refer to applicable Kodiak Manual for the Ground Performance Check Chart for the PT6A-34 engine.		

Reservoir Fuel Low/Fuel Selectors OFF Warning Test								
Control	Position	X	Results					
Engine	Start (IAW POH/AFM)							
Aux Buss	OFF							
Power Lever	IDLE							
Propeller Lever	MAX RPM							
Condition Lever	LOW IDLE							
Auxiliary Fuel Pump	ON							
Fuel Selector Controls	BOTH OFF		and Check:	Y	N	Comments:		
			Fuel Selectors OFF Warning light above PFD1 Illuminates					
			Audible Chime Heard					
			FUEL OFF annunciator shown on PFD					
			RESERVOIR FUEL annunciator shown on PFD when fuel level in reservoir decreases			Delay no more than 10 minutes. **NOTE:** Continue with checklist while waiting for annunciator to appear.		
Fuel Selector Controls	BOTH ON						MECH	INSP
						Initials:		

Electrical Power Check								
Control/System	Position/Condition	X	Results					
Power Lever	IDLE							
Propeller Lever	MAX RPM							
Condition Lever	LOW IDLE							
Generator	ON							
Alternator	ON		and Check:	Y	N	Comments:		
			Note Alternator Amps					
			Note Generator Amps					
Left Pitot Heat	ON		and Check:	Y	N	Comments:		
			Alternator amps increase with applied load					
Right Pitot Heat	ON		and Check:	Y	N	Comments:		
			Generator amps increase with applied load					
			Check M Bus: 27.0V-28.2V				MECH	INSP
						Initials:		

DOI - KODIAK 100 SERIES - ANNUAL INSPECTION

Electrical Power Check								
Control/System	Position/Condition	X	Results					
Generator	OFF		and Check:	Y	N	Comments:		
			Alternator and batteries carry entire electrical load.					
			GEN FAIL annunciator shown on PFD					
			M Bus: 24-25.5V (Depending on battery voltage)					
			E Bus: 28.3-29.1 V					
Generator	ON							
Alternator	OFF		and Check:	Y	N	Comments:		
			Generator carries entire electrical load.					
			ALTERNATOR FL annunciator shown on PFD					
			M Bus: 27.0-28.2 V					
			E Bus: Approx.. 1 V less than Bus M volts					
Generator & Alternator	OFF		and Check:	Y	N	Comments:		
			Batteries carry entire electrical load					
			ALTERNATOR FL annunciator shown on PFD					
			GEN FAIL annunciator shown on PFD					
Generator	ON							
Alternator	ON						MECH	INSP
			Initials:					

Engine Idle Check								
Control/System	Position/Condition	X	Results					
Power Lever	IDLE							
Propeller Lever	MAX RPM							
Condition Lever	LOW IDLE		and Check:	Y	N	Comments:		
			Electrical Load approx. 50 amps					
			Ng speed 52.5-55.5%					
Condition Lever	HIGH IDLE		and Check:	Y	N	Comments:		
			Ng speed 68-72%				MECH	INSP
			Initials:					

DOI - KODIAK 100 SERIES - ANNUAL INSPECTION

Propeller Governor Operational Check								
Control/System	Position/Condition	X	Results					
Propeller Lever	MAX RPM							
Condition Lever	LOW IDLE							
Power Lever	ADVANCE until Np stabilizes at 2200 RPM +0/-10 RPM							
Power Lever	ADVANCE 10% Ng		and Check:	Y	N	Comments:		
			Np stabilizes at 2200 RPM					
Power Lever	IDLE							
Propeller Lever	LOW RPM							
Power Lever	ADVANCE until Np stabilizes at approximately 1900-2030 RMP							
Power Lever	ADVANCE 10% Ng		and Check:	Y	N	Comments:		
			Np stabilizes at 1900-2030 RPM					
Power Lever	IDLE							
Propeller Lever	MAX RPM						MECH	INSP
						Initials:		

Propeller Overspeed Governor Operational Check								
Control/System	Position/Condition	X	Results					
Propeller Lever	MAX RPM							
Overspeed Governor Test Switch	Press and Hold							
Power Lever	ADVANCE until Np stabilizes at 2070 RPM +/- 50 RPM							
Power Lever	ADVANCE Ng 10%		and Check:	Y	N	Comments:		
			Np stabilizes at 1900-2030 RPM					
Power Lever	IDLE							
Overspeed Governor Test Switch	Release							
Power Lever	ADVANCE		and Check:	Y	N	Comments:		
			Governor Limits to 2200 RPM				MECH	INSP
						Initials:		

Power Lever Reverse Ng Speed Pickup Check								
Control/System	Position/Condition	X	Results					
Propeller Lever	MAX RPM							
Condition Lever	HIGH IDLE		and Check:	Y	N	Comments:		
			Note Np RPM					
			Note Ng %					
Power Lever	Move slowly to BETA Range		and Check:	Y	N	Comments:		
			Note Np RPM					
			Note Ng %					
Power Lever	MAX REVERSE		and Check:	Y	N	Comments:		
			Max reverse torque is a minimum of 700 ft. lbs.					
			Propeller RPM does not exceed 2100 RPM					
Power Lever	IDLE		and Check:	Y	N	Comments:	MECH	INSP
						Initials:		

DOI - KODIAK 100 SERIES - ANNUAL INSPECTION

Emergency Power Lever Annunciator Test						
Control/System	Position/Condition	X	Results			
Power Lever	IDLE					
Propeller Lever	MAX RPM					
Condition Lever	LOW IDLE					
Emergency Power Lever	Slowly ADVANCE		and Check:	Y	N	Comments:
			ITT, TRQ, and Ng limits at all time			
			Keep Ng increase at less than 4% per sec.			
			EMER PWR LVR annunciator shown on PFD			
Emergency Power Lever	SLOWLY increase Ng to 67% Ng					
Emergency Power Lever	SLOWLY reduce to NORMAL (Full Aft)		and Check:	Y	N	Comments:
			Keep Ng decrease at less than 4% per sec.			
			EMER PWR LVR annunciator extinguishes			
						MECH / INSP
			Initials:			

ACFT TYPE		ANNUAL INSPECTION REQUIREMENTS	MECH	INSP
ALL	8	Inspect three (3) Blade Hartzel Propellers as instructed below.		
		Remove the spinner dome.		
		Visually inspect the entire blade for nicks and cracks. If any damage is discovered, refer to appropriate manual for further instructions.		
		A cracked blade must be referred to an appropriately licensed propeller repair facility.		
		Inspect all visible propeller parts for cracks, wear, or unsafe conditions.		
		Check for oil and grease leaks. Refer to applicable manual for further instructions.		
		If a blade track problem is suspected, check the blade track. Refer to applicable manual for further instructions.		
		Make an entry in the log book verifying this inspection.		

ACFT TYPE		ANNUAL INSPECTION REQUIREMENTS	MECH	INSP
ALL	9	Inspect four (4) Blade Hartzel Propellers as instructed below.		
		Remove the spinner.		
		Visually inspect the blades for nicks and cracks. If any damage is discovered, refer to applicable manual for further instructions.		
		Inspect all visible propeller parts for cracks, wear or unsafe conditions.		
		Check for oil and grease leaks. Refer to appropriate manual.		
		If a blade track problem is suspected, check the blade track. Refer to appropriate manual.		
		Check preload plate set screw. Refer to appropriate manual.		
		Make an entry in the log book verifying the inspections.		

ACFT TYPE		ANNUAL INSPECTION REQUIREMENTS	MECH	INSP
ALL	10	Engine Mount - for cracks, looseness of mounting, and looseness of engine to mount.		
ALL	11	Engine Mount Elastomers - for poor condition and deterioration.		
ALL	12	Engine External Tubing, Wiring, Control Linkages, and Hose Assemblies: All accessible connections, clamps and brackets for attachment. **NOTE:** Inspect accessible lockwire and safety cable for security and installation. Check for wear, chafing, cracks and corrosion. **NOTE:** Visually inspect insulated air tubes for sign of swelling, cracking, bulging of rubber sheath material. Replace as necessary. Check fuel and oil lines for leaks.		
ALL	13	Pay particular attention to rear linkage cam box, fuel control unit arm, telescopic rod and rod end fittings. Disconnect rod ends and clean using solvent (PWC11-027) or (PWC11-031). Lubricate with light grease (PWC04-001) after engine external wash. Examine rod end for corrosion, roughness in rotation, side play and radial play. After lubrication reinstall rod ends and torque to specified value. Check free movement of linkage.		
		(1) Visually inspect the actuating levers, control cam, and control lever mounting bracket for cracks. Cracks are not permitted.		
		(2) Visually inspect the reversing lever guide pin bracket assembly on both faces of the fillet weld area around the guide pin for cracks. If cracks are found and/or fillet weld is on one face only, replace the bracket assembly (Ref. SB1416).		
		(3) Examine the parts for minor surface damage such as scores, nicks, scratches, and gouges. Minor surface defects may be cleaned up by local blending with a fine stone or crocus cloth (PWC05-061) making sure that all sharp edges and high spots are removed.		
		(4) Inspect the pin and bolt holes in each part and the slot in the control cam, for burrs and/or chipped edges. Clean up minor damage with a suitable Swiss file or fine stone.		
		(5) Examine the grooved pin for burrs, nicks, scores and similar defects on serrations which might interfere with the fit between mating parts. Clean up minor defects with a fine stone and check the fit of mating parts.		
		(6) Inspect the flexible shaft (wire rope) casing for cuts, dents, cracks, kinks, and similar defects which might prevent free movement of the internal wire rope. Minor damage is acceptable, providing the wire rope will operate freely without binding.		
		(7) Check the wire rope for breaks in the wires, twisting, kinking, and for separation of the reverse wound coils. Reject the wire rope if damaged. Repair is not permitted.		

ACFT TYPE		ANNUAL INSPECTION REQUIREMENTS	MECH	INSP
ALL	14	Air Inlet Screen: Check for cleanliness.		
		(1) Inspect the air inlet screen wire mesh for cleanliness and/or damage. Screens with broken wire mesh must be replaced. Clean undamaged screens (Ref. Cleaning/Painting).		
		(2) On early PT6A-34 engines Post-SB1191: Check the spacer (5, Fig. 201) for security; rebond as necessary.		
		(3) For PT6A-34AG engines with the bleed air case; inspect the case for general condition and surface damage. Check for security of the packing material.		

ACFT TYPE		ANNUAL INSPECTION REQUIREMENTS	MECH	INSP
ALL	15	Gas Generator Case: Inspect external surfaces, and fireseal mount ring brackets for cracks, distortion, and corrosion.		
		(a) Examine for general condition, including cracks, distortion, corrosion and evidence of overheating.		
		(b) Minor corrosion on exposed surface of gas generator case may be removed. **NOTE:** If condition of gas generator case indicates further inspection is required, remove fuel manifold adapters and spark igniters		
		1) Machined surfaces (bosses and pads) with corrosion pitting less than 0.010 inch deep and less than 75 percent of the surface is acceptable without repair.		
		(c) On engines INSTALLED in the airframe, examine the engine mounts for attachment and condition (Ref. Aircraft Maintenance Manual).		
		(d) On engines NOT INSTALLED in the airframe, examine the condition of the mounting pads and threaded holes. Damage to the threaded holes may be repaired (Ref. Approved Repairs).		

ACFT TYPE		ANNUAL INSPECTION REQUIREMENTS	MECH	INSP
ALL	16	Fireseal Mount Rings: Check for cracks and attachment of brackets and seals.		
		(1) Examine the mount ring halves (Pre-SB1445 or Post-SB1445) for attachment, damage and condition. **NOTE:** For the external tubes/lines passing through the mount rings, refer to relevant chapters in this manual.		
		(2) Examine the circumferential packing material for security (Pre-SB1445 or Post-SB1445). A loose strip may be rebonded (Ref. Approved Repairs).		
		(3) Examine the rear fireseal mount ring halves for attachment, damage and condition. **NOTE:** For the external tubes/lines passing through the mount rings, refer to the relevant chapters in this manual.		
		(4) Examine the circumferential insulating strips for attachment. Loosened strips may be rebonded.		
		(5) Inspect mount ring spacers (Post-SB1441) for damage and condition. Replace as necessary.		

ACFT TYPE		ANNUAL INSPECTION REQUIREMENTS	MECH	INSP
ALL	17	Exhaust Duct: Check for cracks and distortion.		
		(1) For periodic, hot section, or unscheduled inspections such as engine sudden-stoppage or suspected aircraft heavy landing, examine the exhaust duct critically for evidence of the following:		
		(a) Examine the outer surface condition for buckling, ripples or similar distortion.		
		(b) Inspect exhaust port flanges for cracking. Cracks not exceeding 0.500 inch in length and do not progress into the stitch weld or cracks in a tangential direction not exceeding 1.000 inch long are acceptable provided they are stop drilled with a 1/16 (0.0625) inch drill.		
		(c) Examine the outer surface, particularly in the vicinity of Flanges A and C and the exhaust ports, for cracking in the metal skin, welds or flange bolt holes. Check the T5 system exit tube for security. The presence of cracks requires the removal of the exhaust duct for overhaul.		
		(d) Check for the integrity of internal structure through the exhaust ports. **NOTE:** Refer to the Aircraft Maintenance Manual for removal/installation of the exhaust stubs.		
		(e) Using suitable lighting or a borescope, examine the internal structure as far as possible for cracks, looseness and distortion.		
		(2) For engines that have incorporated SB1610 since the last overhaul and that exhibit inferior welds.		
		(a) Inspect for cracks at each minor inspection and repeat the inspection at intervals not to exceed 150 hours of flight time.		
		(b) If cracks are found, repeat the inspection at intervals not to exceed 25 hours flight time. All cracks will be marked with a suitable metal marking pencil (PWC05-018), and the length, location, duct hours and Time Since Overhaul recorded.		
		(c) Using 5x magnification, visually inspect the forward area of the exhaust duct for cracks, from the propeller reduction gearbox mounting flange to 2 inches aft around the entire circumference of the duct.		
		1) Exhaust ducts are considered serviceable provided; a) There are no more than 3 cracks. b) The total length of all cracks does not exceed 2 inches. c) No one crack exceeds 1 inch. d) When there are 2 or 3 cracks they must be separated by a minimum of 6x the length of the longest crack or 3 inches, whichever is greater. e) The growth rate of any crack does not exceed 0.015 inch/hour of operation.		
		(3) With the power turbine vane ring and stator housing removed (Ref. Fig. 201):		
		(a) Inspect the exhaust duct (1) for cracks at Flange D in the location shown in detail A. Close visual and dye penetrant inspection should be carried out. When cracks are indicated, remove the exhaust duct for overhaul.		

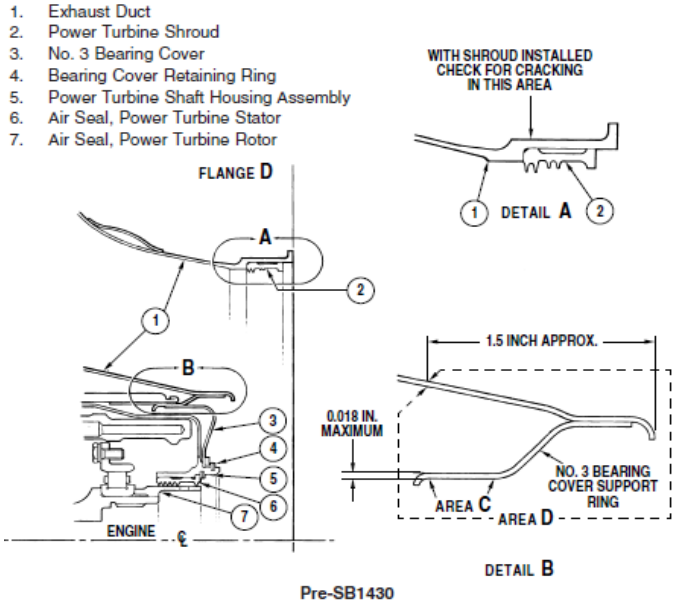

Removal/Installation of Exhaust Duct
Figure 201

	MECH	INSP
(4) With the power turbine disk removed:		
(a) Inspect the installed No. 3 bearing cover (3) Pre-SB1430. If evidence of looseness or rotation is present, refer to appropriate manual.		
(b) Inspect the exhaust duct (1) area C where the bearing cover (3) Pre-SB1430 outside diameter mates with the exhaust duct. Light fretting may be polished out to the minimum material thickness of 0.018 inch. Evidence of the bearing cover rotation requires close visual and fluorescent dye penetrant inspection. The presence of cracks requires the removal of the exhaust duct for overhaul		
(c) Inspect the end of the ski jump Pre-SB1430 area D, Detail B, for cracks using fluorescent dye penetrant inspection. No cracks allowed.		

ACFT TYPE		ANNUAL INSPECTION REQUIREMENTS	MECH	INSP
ALL	18	Propeller Shaft Seal: Check for oil leaks.		
		A. Inspection of Oil Seal Retaining Ring or Ring Halves		
		(1) Examine oil seal retaining ring or ring halves for nicks, burrs and surface damage. Light stoning of damaged surfaces is acceptable.		
		(2) Check integrity of Post-SB1381/Post-SB1652 felt strip inserts in oil seal retaining ring halves . If worn or damaged, retaining ring halves must be shipped to an approved overhaul facility for felt strip insert replacement.		
		B. Inspection of Oil Seal Runner		
		(1) Examine visible area of seal runner for nicks, burrs and other surface damage caused by tools during removal of seal. No repair is acceptable. Ship power output section of engine to an approved overhaul facility for replacement of defective seal runner.		
		NOTE: If applicable, check the integrity of the sealant (PWC09-001) between the forward lip of the oil seal runner and propeller shaft. Replace if necessary.		
		(2) Examine the propeller shaft oil seal contact area on seal runner for wear (grooving). If concentrated wear is present, installation of an alternate offset propeller shaft oil seal should be considered. This offset seal will contact the runner at a different location (Ref. IPC).		

ACFT TYPE		ANNUAL INSPECTION REQUIREMENTS	MECH	INSP
ALL	19	Accessories: Inspect attachment and linkages, air, oil and fuel lines. **NOTE:** Visually inspect insulated air tubes for sign of swelling, cracking, bulging of rubber sheath material. Replace as necessary. Inspect for oil and fuel leaks as applicable. Check starter-generator gearshaft splines for wear (At starter-generator removal/replacement only)		
		(1) Insulated Tube Assemblies		
		(a) Examine flanged end fitting for elongated holes.		
		(b) Examine tube assemblies IAW applicable engine maintenance manual.		
		(c) Blend out damage that does not exceed specified limits. Replace tube assemblies damaged beyond limits.		
		(d) Examine the insulation on the pneumatic tube assemblies for cuts in the outer rubber sheath. Surface cuts up to three inches long may be repaired.		
		(e) If surface damage exceeds specified limits above, but depth is superficial, sheathing may be repaired by replacement of damaged portion.		
		(f) Examine the metal braid and electrical lead on heated tubes for cuts. Up to three broken wires per plait, or six broken wires per linear foot, are acceptable. Replace the tube assemblies where metal braid is chafed or worn through to the lead conductors.		
		(2) For Post-SB1495 Engines Air Filter Housing Drain Valve Assembly.		

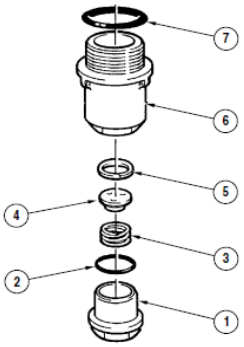

1. Drain Valve Adapter
2. Preformed Packing
3. Spring
4. Drain Valve
5. Retaining Ring
6. Filter Cover
7. Preformed Packing

Post-SB1495 Engines

Removal/Installation of Air Filter Housing Drain Valve
Figure 205

		MECH	INSP
	(a) Filter Cover (6):		
	1) Check lockwire holes for damage (tearing, cracks).		
	2) Check threads for damage.		
	3) Check that contact area is free of nicks and/or scratches.		
	(b) Retaining Ring (5):		
	1) Check for distortion. Replace if distorted.		
	(c) Drain Valve (4):		
	1) Check that contact area is free of nicks and/or scratches.		
	2) Make sure drain holes are clear and unobstructed.		
	(d) Valve Spring (3):		
	1) Check for corrosion and/or damage. Reject if unsatisfactory.		

	MECH	INSP
(e) Drain Valve Adapter (1):		
1) Check threads for damage.		
2) Check that contact area is free of nicks and/or scratches.		
3) Check flats and lockwire holes are free of damage.		
4) Check retaining ring groove. Reject if damaged or worn.		
A. Accessory Gearshaft Spline Wear Check.		

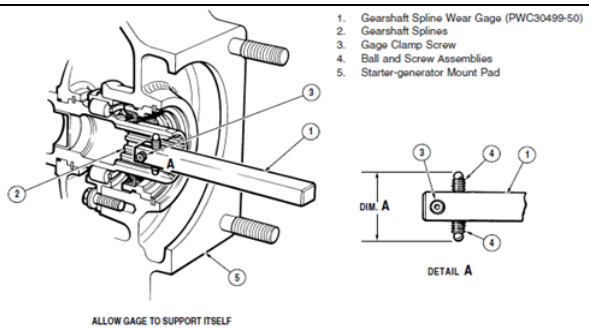

Accessory Gearshaft Spline Check
Figure 204

	MECH	INSP
NOTE: The accessory gearshaft must be checked for spline wear at related component removal/installation (Ref. Aircraft Maintenance Manual).		
(1) Release the clamp screw (3) and adjust the screw assemblies (4) to obtain the dimension of 0.660 inch over the ball ends. Tighten the clamp screws and recheck the dimension.		
(2) Tilt the gage (1), outer end uppermost, and insert the gage (PWC30499-50) into the shaft centerbore until the ball ends are approximately midway along vertically opposite splines.		
(3) Gradually release the gage, allowing it to support itself in the shaft. If the gage is self-supporting, the gearshaft is considered serviceable. If the gage extension falls below the horizontal, the gearshaft must be replaced.		
B. Oil Filler Cap, Dipstick/Gage Assembly and Oil Filler Tube.		

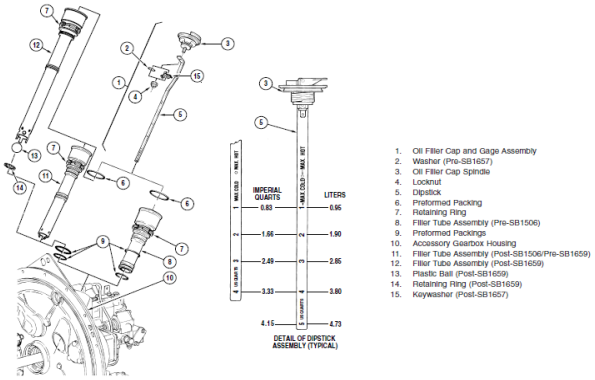

Removal/Installation of Oil Filler Cap, Dipstick/Gage Assembly and Oil Filler Tube
Figure 203

	MECH	INSP
(1) Examine the filler cap and level indicator assembly, and the oil filler tube for corrosion and signs of damage.		
(2) For Post-SB1506 Engines: Make sure the ball moves freely in the check valve of the filler tube.		
(3) Check the spring-loaded locking feature of the cap for serviceability. If the force required to depress/lift the handle is outside the limit (8 to 11 lbs.), remove the cap and tighten/loosen the self-locking nut to meet the required limit.		

	MECH	INSP
NOTE: Ensure the self-locking nut is securely fastened (refer to SB1637 - Inspection of Oil Tank Filler Cap).		
(4) Check the gage blade for security and visible damage.		
(5) When the cap is locked, there should be no movement. If movement is found, replace the cap.		
C. Inspection of Scavenge Pump Inlet Screen		

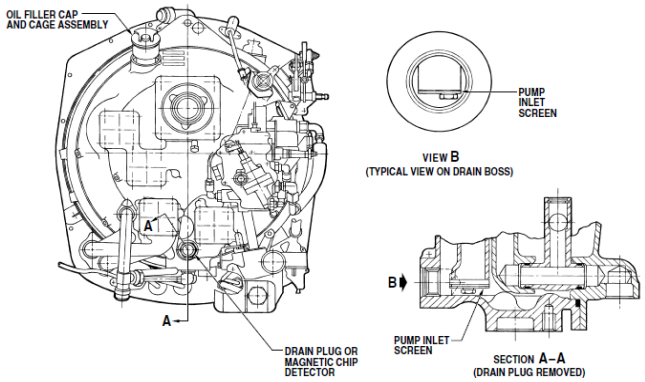

Scavenge Pump Inlet Screen Inspection
Figure 205

	MECH	INSP
(1) Remove oil drain plug located on the AGB housing (Ref. Fig. 205).		
NOTE: For engine equipped with an AGB chip detector, remove the chip detector.		
(2) Collect drained oil in a clean container and check for any debris IAW maintenance manual.		
(3) Use a mirror and suitable light source (or borescope) and inspect the scavenge oil pump inlet screen for carbon or debris IAW appropriate maintenance manual.		
NOTE: Any foreign material found blocking the screen or contained in the oil should be identified. Look especially for paint flakes approximately 1/8 inch to 1/2 inch in diameter IAW appropriate manintenance manual.		
(4) If carbon or debris is present, clean the inlet screen (Ref. Cleaning/Painting, Fig. 205).		
(5) Install the drain plug on the AGB housing IAW appropriate maintenance manual.		
NOTE: For engine equipped with an AGB chip detector, install the chip detector.		
(6) Replenish the drained oil (if not contaminated by foreign material) in oil tank.		

ACFT TYPE		ANNUAL INSPECTION REQUIREMENTS	MECH	INSP
ALL	20	First-stage Compressor Rotor: Do a visual inspection with a mirror or a borescope. **NOTE:** If any FOD has caused the engine to become prone to engine surges or causes unusual compressor whining, the large bent airfoil will make the whining sound. Remove the engine immediately.		
ALL	21	Hot Section: Examine with borescope. In conjunction with periodic fuel nozzle leak and function tests. For Post-SB1590 engines NOT incorporating SB1627 or SB1628: (1) Analyse engine condition trend monitoring system data on a weekly basis. No baseline HSI is required. (2) If the analysis indicates that the engine is deteriorating, then do a hot section inspection.		
		Hot Section Inspection (Ref. Fig. Appropriate HSI Sheets)		
		(1) For a normally scheduled HSI, do a ground performance run.		
		(2) Remove the RGB strainer, the main oil filter and the chip detector(s). Verify the debris.		
		(3) Verify Compressor for FOD.		

	MECH	INSP
(4) Remove power section/power section module.		
(5) Measure the radial CT blade tip clearance and remove compressor turbine disk and blade assembly IAW appropriate manual.		
(6) Remove combustion chamber liner IAW appropriate manual.		
NOTE: Should it be necessary during HSI, to make a more detailed inspection of components which remain installed, those components should be removed IAW appropriate manual.		
(7) Verify components as per Pratt and Whitney PT6 Maintinance Manual Table 603.		
(8) If HSI is done due to over temperature, remove PT stator housing IAW appropriate manual.		
(9) If necessary, calibrate and verify aircraft instrumentation after engine assembly.		
(10) Do a ground performance run and inspect BOV closing point IAW appropriate manual.		
(11) If a significant T5 increase is noted after ground performance run, borescope hot section for CT blade shroud rub.		

ACFT TYPE		ANNUAL INSPECTION REQUIREMENTS	MECH	INSP
ALL	22	Oil System: Check oil level. **NOTE:** For oil change recommendations, refer to SB1001. Check condition and locking of oil filler cap. Oil filter elements and secondary screen (coarse hat-type screen attached to the inner end of the filter). Elements must be inspected and cleaned. Light traces of sediment only may be removed from the main filter screen. All other contamination requires replacement of filter element. Any foreign material found in main oil filter or on chip detector, should be identified before further inspection/operation. **NOTE:** Inspect initially at 100 hours with extension to relevant airframe zone inspection based on inspection results but not to exceed 200 hours. **NOTE:** If the engine has a recent history (within 200 flight hours) of generating carbon debris; do the inspection at 100 hours interval and replace the filter element at 300 hours interval. Refer to the appropriate manual for the instructions to start oil filter inspection again and for the oil filter replacement intervals. **NOTE:** If carbon like deposits are found, drain accessory gearbox oil into a clean container and examine debris. Varnish flakes are non metallic and are usually dark on one side and shiny, similar to bronze, on the other side. They are hard and will not form into paste when rubbed between fingers.		
ALL	23	Check magnetic chip detector(s) for continuity, open circuit must exist indicating no contamination at pole tips. If continuity is there, remove and examine for contamination. Any foreign material found on the chip detector or in the main oil filter must be identified before further inspection/operation. Refer to applicable manual. (See NOTE 3). **NOTE 1:** FOR SINGLE ENGINE AIRCRAFT, If the chip detector is connected to a cockpit indicating system, examine the chip detector initially at 100 hours with extension to relevant airframe zone inspection based on the inspection results, but not more then 200 hours. **NOTE 2:** FOR TWIN ENGINE AIRCRAFT, If the chip detector is connected to a cockpit indicating system, examine the chip detector initially at 100 hours with extension to relevant airframe zone inspection based on the inspection results, but not more than 400 hours. **NOTE 3:** While the chip detector is removed, examine with both poles bridged. With poles unbridged, inspect if continuity exists, and if no continuity exists, replace the chip detector.		
ALL	24	Bridge chip detector(s) magnetic pins with suitable jumper, and using a suitable ohmmeter, check continuity between connector pins. If continuity does not exist, replace chip detector. Any foreign material found on chip detector or in main oil filter should be identified before further inspection/operation. Refer to appropriate maintenance manual. **NOTE:** For aircraft equipped with an airframe supplied indicating device, the integrity of the complete indicating system can be checked by re-attaching the electrical connector to the removed chip detector and check for chip indication when magnetic poles are bridged. Closed circuit condition must exist.		
ALL	25	Check scavenge oil pump housing for leaks.		

ACFT TYPE		ANNUAL INSPECTION REQUIREMENTS	MECH	INSP
ALL	26	Check the AGB internal scavenge oil pump inlet screen IAW appropriate maintenance manual. Collect drained oil. Using a mirror and a flashlight inspect the scavenge oil pump inlet screen. Any foreign material found blocking the screen or contained in the oil should be identified before further operation.		
		A. Cleaning of Scavenge Oil Pump Inlet Screen (Ref. Fig. 205)		

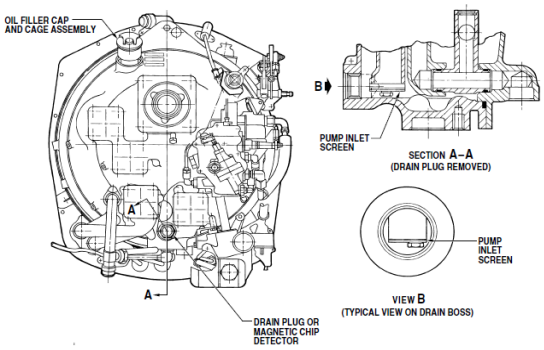

Scavenge Pump Inlet Screen Inspection
Figure 205

	MECH	INSP
(1) If carbon is present on the screen mesh, loosen with a suitable small plastic scraper or similar nonmetallic scraper. Do not deform the screen mesh.		
(2) Flush any carbon residue from the AGB as follows:		
(a) Remove the oil filler cap.		
(b) Remove the retaining ring and the oil filler tube.		
(c) Place a suitable container under the AGB drain, and pour approximately 34 fluid ounces (one liter) of new engine oil (PWC03-001) heated to 122°F (50°C), into the AGB filler tube opening. Make sure oil does not enter oil tank.		
(d) Let oil drain. Examine inlet screen and surrounding area to make sure carbon residue is removed. If not, repeat flushing procedure above.		
(3) Install oil filler tube.		
(4) Refill oil tank IAW appropriate maintenance manual.		

ACFT TYPE		ANNUAL INSPECTION REQUIREMENTS	MECH	INSP
ALL	27	Fuel System: Check fuel for water contamination. Check fuel pump for installation and leaks IAW appropriate manual. **NOTE:** If airframe fuel boost pump fails or is inadvertently left off for an accumulative time in excess of 10 hours, the engine driven fuel pump must be removed and replaced. The removed pump should be sent to an approved overhaul facility. **CAUTION:** ON NEW AIRCRAFT, CHECK FILTER AFTER EACH FLIGHT UNTIL NO CONTAMINATION IS EVIDENT. CHECK AFTER FIRST FLIGHT OR GROUND RUN WHENEVER ANY COMPONENT UPSTREAM OF FILTER IS REPLACED.		
ALL	28	Check outlet filter for foreign matter or distortion IAW appropriate manual. Install new filter as service conditions dictate, not to exceed 600 hours and when fuel system contamination is suspected.		
ALL	29	Check drain valve for installation and leaks IAW appropriate manual.		
ALL	30	Check FCU for installation, linkages and pneumatic tubes IAW appropriate manual.		
ALL	31	For Post-SB1568: Do a deceleration check IAW appropriate manual. **NOTE:** Not required for FCU identified with ‘‘RE52’’, ‘‘SB 73-3’’ or with a serial number that contains the letter F as prefix.		
ALL	32	For engines fitted with a manual override on the fuel control, check FCU Manual Override System for static operation.		
ALL	33	Check FCU for bearing wash-out, indicated by blue dye (grease and fuel mixed) at FCU vent .		

ACFT TYPE		ANNUAL INSPECTION REQUIREMENTS	MECH	INSP
ALL	34	Check starting flow control/flow divider for installation and leaks IAW appropriate manual.		
ALL	35	Leak test and function test fuel manifold adapter and nozzle assemblies IAW appropriate manual. **NOTE 1:** Do the periodic borescope inspection of the hot section components in conjunction with the following tests. **NOTE 2:** Regular fuel nozzle maintenance is important for hot section durability. Inspection recommended at routine intervals according to: Engines ON fuel nozzle in-situ cleaning program, test fuel nozzles and repair as necessary. Where fuel quality is not sure, and for operators new to PT6A operation, inspection is recommended at 400 hours initially, with extension based on the operators experience and rejection rate, not more than 200 hours. For other operators, inspection is recommended at 600 hours initially, with extension based on the operators experience and rejection rate, not more than 200 hours. Engine NOT ON fuel nozzle in-situ cleaning program, test fuel manifold adapter. Where fuel quality is not sure, and for operators new to PT6A operation, cleaning/inspection is recommended at 200 hours initially, with extension, based on the operators experience and rejection rate, not more than 200 hours. For other operators, inspection is recommended at 400 hours initially, with extension based on the operators experience and rejection rate, not more than 200 hours.		
ALL	36	Check oil-to-fuel heater installation IAW appropriate manual.		
ALL	37	Ignition System: Check ignition exciter/current regulator for installation and condition IAW appropriate manual.		
ALL	38	Check ignition cables for chafing, wear and installation IAW appropriate manual.		
ALL	39	Check spark igniter/glow plugs for cleanliness and erosion. Check function IAW appropriate manual. **NOTE:** Inspect initially at 100 hours with extension to relevant airframe zone inspection based on inspection results but not to exceed 200 hours.		
ALL	40	Pneumatic System: Check P3 filter for installation IAW appropriate manual.		
ALL	41	Inspect pneumatic tubes and lines for cracks and damages especially at the end fittings and joints.		
ALL	42	Clean or replace filter, dependent on condition, service experience or environment IAW appropriate manual. **NOTE:** Visually inspect the P3 filter for corrosion. If the filter shows presence of corrosion, discard the filter and replace with a new filter.		
ALL	43	Clean and inspect Post-SB1495 P3 filter drain valve housing assembly IAW appropriate manual. **NOTE:** Filter contamination is greatly influenced by particular operating conditions and environment, inspection intervals may be modified accordingly.		
ALL	44	Propeller; Perform inspections as for in the Hartzel Propeller Owner's Manual and Logbook, Manual No. 149.		
ALL	45	Engine Inlet and Inertial Air Particle Separator (as equipped, either with Single actuated or Dual-actuated): Inspect for security of installation, condition and proper freedom of movement while accomplishing an operational check. Inspect door pivot points for proper condition. Check actuator(s) and linkage for proper operation and freedom of movement. Check for full opening of bypass door through inlet duct. Lubricate the separator actuators with LPS 1.		
ALL	46	Compressor Wash: Inspect wash ring for condition and security of installation. Perform a compressor wash.		

TITLE:	Turbine Blade Wash Procedures	MECH	INSP
INSPECTION INSTRUCTIONS	**NOTE:** Adhere to the following starter limitations for motoring the engine.		

Starter Options	Time ON	Time OFF
Lo/Motor	30 seconds	60 seconds
Lo/Motor	30 seconds	60 seconds
Lo/Motor	30 seconds	30 minutes

	MECH	INSP
NOTE: A minimum cool-down period of 40 minutes is recommended after engine running before injecting rinse fluid.		
NOTE: Compressor turbine blade washing is to be accomplished using potable water only at an ambient temperature of above 36°F. A potable water/methanol solution may be used with ambient temperatures below 36°F. See the P&W Maintenance Manual for appropriate solution strengths with varying ambient temperatures.		
1. Remove upper and lower forward cowlings.		

	MECH	INSP
2. Place a suitable pan beneath the engine to recover wash solution.		
3. Remove one of the two igniter plugs.		
4. Install spray tube P/N PWC32271 in the igniter plug boss and tighten spray tube finger tight. Make sure the arrow on the tab of the spray tube is directed toward the propeller reduction gearbox and is parallel with the engine centerline.		
CAUTION: The cleaning solution supply hose should be supported in order to prevent damage to the spray tube.		
5. Connect a hose from a suitable cleaning rig to the spray adapter. The water/solution mixture should be delivered to the engine at 40 psi.		
6. Verify the engine ignition switch and engine bleed air is in the OFF position.		
7. Begin motoring the engine with the starter for 30 seconds; when the NG reaches 5%, introduce the wash solution to the engine.		
NOTE: Approximately ½ gallon of rinse solution will be consumed through the compressor turbine during a 30-second cycle.		
CAUTION: When using a water/methanol solution, perform an additional 30 seconds of dry motoring after each washing cycle to purge the engine of the volatile methanol fumes. Make sure recommended starter cooling periods of 40 minutes is observed.		
8. Repeat the washing cycle as required to remove contaminants from the turbine blades.		
9. Remove the spray tube assembly and reinstall the igniter plug.		
10. Perform two consecutive dry motoring runs while making sure the starter motoring limitations are not exceeded.		
11. Reinstall all engine cowlings.		

ACFT TYPE		ANNUAL INSPECTION REQUIREMENTS	MECH	INSP
ALL	47	External Power System: Perform an operational test of the bus and starter functions while using external power in accordance with the POH/AFM.		
ALL	48	Igniters: Perform an operational check by turning on the master switch and ignition switch while verifying illumination of the IGNITION ON annunciator and proper function of both igniters.		
ALL	49	Cabin Electrical Heating Units: Inspect for security of installation, foreign objects, and signs of overheating. Perform an operational check.		
ALL	50	Avionics Cooling Fans: Turn Battery Master Switch and Avionics Bus E switches ON and verify proper operation of the avionics cooling fans.		
ALL	51	ECS Touch Screen: Check for proper operation and security of installation.		
ALL	52	Autopilot Unit and Control Switches: Check for security of installation and proper operation. Perform an operational check of the autopilot system.		
ALL	53	Aileron Trim Control Switches and Indicator: Inspect the switches and position indicator for proper function, condition, and security of installation. Perform an operational check in accordance with the POH/AFM.		
ALL	54	Flaps - Trim Compensation Unit Check: Perform a functional check of the Trim Compensation Unit as instructed below. (If equipped with S-TEC autopilot)		
TITLE:		Pitch Trim Compensation Unit Calibration		

		MECH	INSP
INSPECTION INSTRUCTIONS	**NOTE:** This only applies to airplanes equipped with a separate trim compensation unit installed in the control pedestal.		
	Before proceeding, perform an operational check to make sure the full nose up and full nose down elevator trim indications are accurate.		
	If indications are not accurate, perform the Elevator Trim Indication Calibration Procedure below.		
	If indications are accurate, proceed with the calibration.		
	1. Using the Digital Level/Protractor, adjust elevator trim tab 5 degrees down from neutral (nose up).		
	2. Remove cover from the Pitch Trim Compensation Unit.		
	3. Apply aircraft power.		

	MECH	INSP
4. Probe, collect, and note voltage reading from Pin 10 of 14-pin IC. See Figure 27-83.		
5. Probe Pin 11 and adjust potentiometer R13 to match Pin 10 voltage.		
6. Make sure elevator trim indicator shows pitch trim just below T/O range.		
7. Replace Pitch Trim Compensation Unit cover.		
8. Press and hold the red override button on the side of the unit to perform a ground check of the system. See Figure 27-84.		

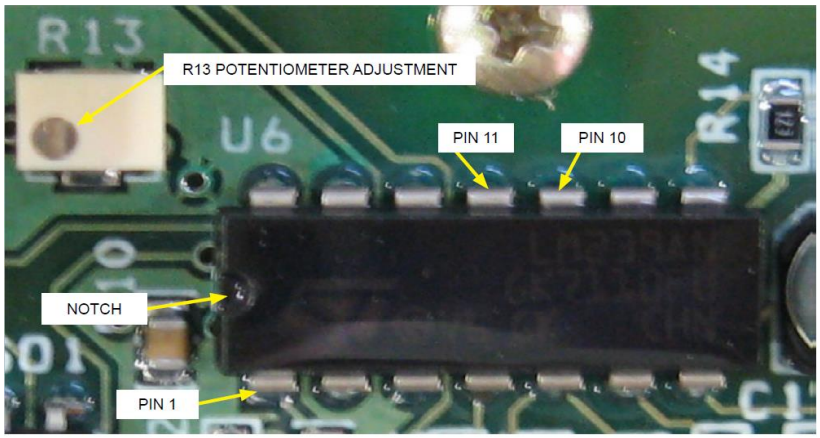

Figure 27-83 — Test Probe Contact Locations for R13 Calibration

	MECH	INSP
9. Run flaps to the full down position.		
10. As flaps extend, make sure elevator trim system runs “nose down”.		
11. Run flaps to full up position.		

Figure 27-84 — Override Button for Ground Testing

	MECH	INSP
12. Make sure elevator trim runs “nose up” and returns to original position.		
13. Run elevator trim to indicate just above T/O range.		
14. Run flaps to the full down position.		
15. As flaps extend, make sure elevator trim system runs “nose down”.		

	MECH	INSP
16. Run flaps to full up position.		
17. Make sure elevator trim runs “nose up” and returns to indicate just above T/O range.		
18. Run elevator trim to indicate just above the full “nose up”.		
19. Lower flaps to full down position.		
20. Make sure elevator trim does NOT operate.		
21. Return flaps to full up position.		
22. Reattach panel to pedestal.		
23. The Pitch Trim Compensation Unit calibration is now complete.		

TITLE:	Elevator Trim Indication Calibration Procedure

		MECH	INSP
INSPECTION INSTRUCTIONS	1. Perform the Elevator Trim Indication Calibration Procedure if not already completed.		

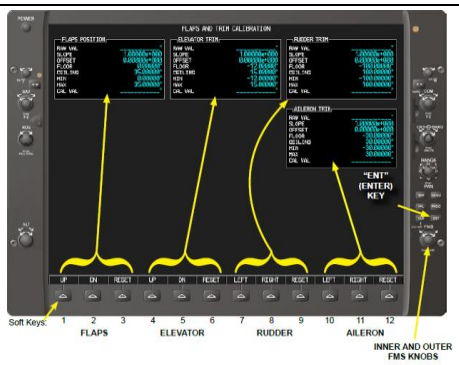

Figure 27-129 — Flaps and Trim Calibration Page

Figure 27-130 — Elevator Trim Reset Warning Prompt

	MECH	INSP
2. Press the Elevator Trim RESET soft key see Figure 27-129, soft key 6. Press OK then “ENT” to acknowledge the following prompt (see Figure 27-130):		
3. Use the elevator trim switch or the manual trim wheel to run the elevator trim to the FULL NOSE UP position.		
4. Press the Elevator Trim UP soft key on the PFD see Figure 27-129, soft key 4.		
5. Run the elevator trim to the FULL NOSE DOWN position.		
6. Press the Elevator Trim DN soft key on the PFD.		
7. Run the elevator trim back to the FULL NOSE UP position.		
8. Using the outer FMS knob, select the “SYSTEM” page group.		
9. Using the inner FMS knob, select the “SYSTEM UPLOAD” page		
10. Press the “UPDATE CONFIG” soft key.		
11. When “Update Config Module” appears, press ENT for OK.		
12. When update is complete, press ENT for OK.		
13. Elevator Trim Calibration is complete.		
14. Turn off Aircraft power.		
15. After 1 minute or more, turn power on and check elevator trim travel indication.		

TITLE:	Pitch Trim Compensation Unit Calibration

		MECH	INSP
INSPECTION INSTRUCTIONS	1. Using the Digital Level/Protractor, adjust elevator trim tab 5 degrees down from neutral (nose up).		
	2. Remove cover from the Pitch Trim Compensation Unit.		
	3. Apply aircraft power.		
	4. Probe, collect, and note voltage reading from Pin 10 of 14-pin IC. See Figure 27-83.		
	5. Probe Pin 11 and adjust potentiometer R13 to match Pin 10 voltage.		
	6. Make sure elevator trim indicator shows pitch trim just below T/O range.		
	7. Replace Pitch Trim Compensation Unit cover.		
	8. Press and hold the red override button on the side of the unit to perform a ground check of the system. See Figure 27-84.		

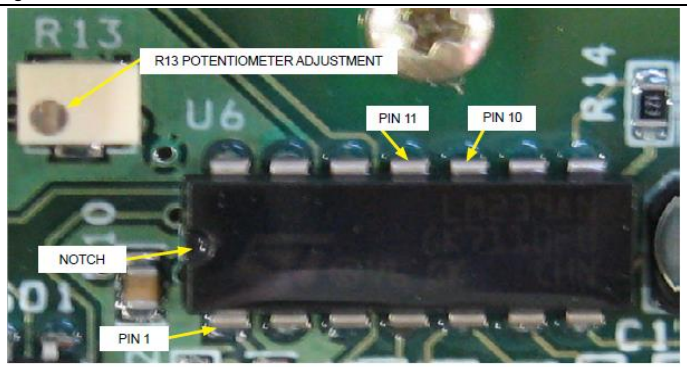

Figure 27-83 — Test Probe Contact Locations for R13 Calibration

	MECH	INSP
9. Run flaps to the full down position.		
10. As flaps extend, make sure elevator trim system runs “nose down”.		
11. Run flaps to full up position.		

Figure 27-84 — Override Button for Ground Testing

	MECH	INSP
12. Make sure elevator trim runs “nose up” and returns to original position.		
13. Run elevator trim to indicate just above T/O range.		
14. Run flaps to the full down position.		

	MECH	INSP
15. As flaps extend, make sure elevator trim system runs “nose down”.		
16. Run flaps to full up position.		
17. Make sure elevator trim runs “nose up” and returns to indicate just above T/O range.		
18. Run elevator trim to indicate just above the full “nose up”.		
19. Lower flaps to full down position.		
20. Make sure elevator trim does NOT operate.		
21. Return flaps to full up position.		
22. Reattach panel to pedestal.		
23. The Pitch Trim Compensation Unit calibration is now complete.		

ACFT TYPE		ANNUAL INSPECTION REQUIREMENTS	MECH	INSP
ALL	55	Elevator Trim Wheel and Indicator: Inspect the trim wheel for proper condition and security of installation. Operate the trim wheel and electric trim to verify proper function, freedom of movement and full range of motion. Verify the indicator functions properly. Perform an electric trim operational check in accordance with the POH/AFM.		
ALL	56	Flap System: Perform an operational check of the flaps through their full range of travel. Inspect for loose rivets, corrosion, cracks, wrinkles, and dents. If so equipped, inspect vortex generators for condition and security. Inspect flap attach points for proper security and condition. Check flap operation for any erratic movement, interference, or binding. Check for proper operation of the flap position indicator.		
ALL	57	Instrument Panel Switches: Check operation; inspect terminals, wiring, and mounting for proper condition and security of installation.		
ALL	58	Exterior Lighting: Check for proper operation of beacon, strobe, NAV, taxi, pulse, and landing.		
ALL	59	Avionics Operating Controls: Inspect for proper operation and security of installation of controls and switches. Verify all displays illuminate properly.		
ALL	60	Garmin G1000 System Inspection: Perform the system inspection as instructed below.		

TITLE: Garmin G1000 System Annual Inspection Procedures

		MECH	INSP
INSPECTION INSTRUCTIONS	1. Start the engine in accordance with the AFM/POH. During engine startup, verify the STARTER ON and IGNITION ON annunciation are shown on.		
	2. Ensure the Battery Master, Avionics, Generator and Alternator switches are in the ON position.		
	3. Verify the FLAP FL annunciation is not shown on the PFD.		
	4. Wait approximately one minute for the system to initialize.		
	5. Verify the system obtains attitude, heading and altitude information and no functions on PFD’s or MFD are inoperative. Inoperative functions are identified by a red “X”.		
	6. Allow the system to acquire a GPS position. Verify that both GIA units are receiving adequate GPS signal by checking the AUX-GPS STATUS page. Verify the G1000 System does not indicate any failures or alerts.		
	7. Verify all engine indications are functioning properly.		
	8. Verify the aircraft charging system is functioning properly (E Bus should indicate approximately 28.5 volts and M Bus should indicate approximately 27.5 volts, tolerance +/- 0.5volts).		
	9. Turn the Generator OFF and verify the G1000 annunciates GEN FAIL and a warning chime sounds.		
	10. Return the Generator switch to the ON position and verify the GEN FAIL annunciation is no longer shown on the PFD’s.		
	11. Turn the Alternator OFF and verify the G1000 annunciates ALTERNATR FL and a warning chime sounds.		

	MECH	INSP
12. Return the Alternator switch to the ON position and verify the ALTERNATR FL annunciation is no longer shown on the PFD's.		
13. Turn the Auxiliary Fuel Pump ON and verify AUX PUMP ON is annunciation appears on the G1000.		
14. Return the Auxiliary Fuel Pump Switch to the OFF position and verify the AUX PUMP ON annunciation is no longer shown on the PFD's.		
15. Place the AUX BUS switch in the ON position and verify AUX BUS ON is annunciated on the G1000.		
NOTE: This annunciation will only appear on aircraft SN 100-0066 and prior if Field Service Instruction FSI-026 "GARMIN G1000 System Software Version 552.14 Upgrade" has been installed.		
16. Shut down the engine in accordance with the POH/AFM and leave the avionics and master switches in the ON position.		
17. Place the Inertial Separator in the Bypass position, wait several seconds and ensure ENG INLET BP is annunciated on the PFD's. Return the Inertial Separator to the normal position and verify the annunciation changes to ENG INLET NRM. Open the cargo door and ensure CARGO DOOR is annunciated on the PFD's.		
18. Pull the FLAPS circuit breaker and verify FLAP FAIL is annunciated on the PFD's. Reengage the Flap circuit breaker and verify the FLAP FAIL annunciation is not shown after 3 seconds.		
19. Turn off avionics switch, press GMA1 Reversionary button and ensure the pilot-side PFD enters reversionary mode.		
20. Run the elevator trim to the nose full up position and verify the trim indication shows full up. Repeat this step for nose full down. Return the elevator trim to the T/O range.		
21. Run the aileron trim to the full right position and verify the trim indication show full right. Repeat this step for full left trim. Return the aileron trim to the centered position.		
22. Run the rudder trim to the full right position and verify the trim indication show full right. Repeat this step for full left rudder trim. Return the rudder trim to the centered position.		
23. The battery Master Switch may be turned off while accomplishing the following two steps in order to preserve battery power.		
24. Remove the access panel directly behind each pitot-static tube.		
25. Disconnect the electrical connection to each pitot tube.		
26. Place the Battery Master Switch in the "ON" position		
27. Place both left and right pitot heat switches in the "ON" position and verify PITOT FL L-R is annunciated through the G1000.		
28. Turn Master Switch "OFF".		
29. Reconnect the electrical connections to each pitot tube.		
NOTE: Verify that the pitot-static probe covers are not installed before turning on the pitot heat.		
30. Turn Master Switch "ON" and verify PITOT FL L-R is not annunciated through the G1000.		
31. Turn both left and right pitot heat switches "OFF".		
32. Turn Master Switch "OFF".		
33. Install the access panel directly behind each pitot-static tube.		
NOTE: The remaining G1000 system checks are accomplished in conjunction with Engine Run-up Checks and Tests.		

ACFT TYPE		ANNUAL INSPECTION REQUIREMENTS	MECH	INSP
ALL	61	Inflatable Crew Door Seal System (If Equipped): Inspect compressor, wiring, tubing, and poppet valves for security and proper installation. Visually inspect door seals and perform operational check.		
ALL	62	Aileron Trim Tab Actuator: Perform an operational check of the electric aileron trim system. Inspect the actuator for condition and signs of damage. Inspect attaching hardware for unusual wear and security of installation.		
ALL	63	Aileron Trim Tab: Check for proper aileron trim tab travel. Perform an Aileron Trim Tab vertical free play inspection (maximum allowed is 0.085").		

ACFT TYPE		ANNUAL INSPECTION REQUIREMENTS	MECH	INSP
ALL	64	Pitot/Static Tube Heat: Operate the pitot heat for approximately 30 seconds and verify proper operation of pitot heat. Turn pitot tube heat OFF.		
ALL	65	Stall Warning System (If Equipped with a Stall Warning Computer): Perform an operational check of the lift transducer, stall warning horn, stall warning horn relay, and stall warning test switch. (Ground Check.)		
ALL	66	Stall Warning System (if not equipped with a Stall Warning Computer): Perform an operational check of the warning vane and horn. (Ground Check.)		
ALL	67	Interior Placards and Markings: Verify presence, legibility, and security of attachment. Check appropriate Kodiak Manual for requirements.		
ALL	68	Exterior Placards and Markings: Verify presence, legibility, and security of attachment. Check appropriate Kodiak Manual for requirements.		
ALL	69	Exterior Fuselage: Inspect the exterior of the fuselage for general condition. Inspect skins for damage, corrosion, and loose or working fasteners.		
ALL	70	Interior Fuselage: Inspect the interior fuselage for corrosion, loose or working fasteners, deformation, and general condition.		
ALL	71	Fuselage and Hull System and Components: Check for improper installation, apparent defects, and unsatisfactory operation.		
ALL	72	All Cockpit and Cabin Systems: Check for improper installation, poor general condition, apparent and obvious defects, and insecurity of attachment.		
ALL	73	Propeller: Inspect for grease and oil leaks. Perform a preload plate set screw inspection.		

TITLE:	Preload Plate Set Screw Check	MECH	INSP
INSPECTION INSTRUCTIONS	1. Manually rotate the propeller and listen for possible noise caused by a broken set or jam nut that may be loose in the propeller hub.		
	2. With the propeller blades in the feathered position, make sure the feather (low) stop nuts are seated on the reverse adjustment sleeve. For more details, see Hartzell Owners Manual 149 Chapter 2, Figures 2-2 through 2-8 and Chapter 5, page 5-28.		
	3. If there is noise indicating a loose part or the propeller blades do not go completely to feather, remove the propeller. Send the propeller to a repair station for disassembly and inspection for a possible broken preload set screw.		
	NOTE: If a broken set screw is found, the propeller must be inspected for damage that may have been caused by the broken set screw, and the incident must be reported to the Hartzell Product Support Department.		

ACFT TYPE		ANNUAL INSPECTION REQUIREMENTS	MECH	INSP
ALL	74	Propeller Beta Feedback Ring: Inspect ring for security of installation, condition, and any warping. Inspect the carbon block for excessive wear and any possible damage (carbon block side clearance must be 0.001” to 0.010”). Inspect the beta linkage for security and condition.		
ALL	75	Propeller Blades: Wash the blades, inspect for nicks, gouges, scratches, depressions, looseness, cracks, security, and condition. Refer to Hartzel Propeller Owner’s Manual and Logbook (Manual No. 149) for further instruction.		
ALL	76	Propeller Mounting: Inspect for proper mounting and visually inspect for security of installation.		
ALL	77	Propeller Spinner: Remove; inspect for cracks, security, condition, and wash.		
ALL	78	Propeller Spinner Bulkhead: Inspect for cracks, security, and condition.		
ALL	79	Propeller Hub: Inspect exposed area for wear, cracks, security, condition and loose/missing hardware.		
ALL	80	Propeller Hub: Lubricate as instructed below.		

TITLE:	Propeller Hub Lubrication	MECH	INSP
INSPECTION INSTRUCTIONS	**NOTE:** If annual operation is significantly less than 400 hours, lubricate the propeller every 6 months. If the aircraft is operated or stored under adverse atmospheric conditions such as high humidity or salt air, lubricate the propeller every 6 months.		
	1. Remove propeller spinner IAW the Hartzell Propeller Owner’s Manual 149.		
	2. Each blade socket has two (Front and Rear) lubrication fittings. Remove the protective caps from the lubrication fittings.		
	3. Remove the forward straight fitting (#1 in Figure 61-8) on each blade socket.		

	MECH	INSP
4. Using a piece of safety wire, remove any blockage or hardened grease at the threaded holes where the lubrication fittings were removed.		
NOTE: Refer to the decal on the propeller that indicates the type of grease that was last used to lubricate the propeller. If the propeller is to be re-lubricated with a different type of grease, refer to the Hartzel Propeller Owner's Manual and Logbook, Manual No. 149.		
CAUTION: Use Hartzell approved lubricants only.		
CAUTION: Do not mix different brands/specifications of grease.		
CAUTION: Do not use an air assisted grease gun to lubricate the propeller.		
5. Hand pump one fluid ounce (approximately 6 pumps) of the appropriate grease into each 45° fitting or pump until grease slightly comes out of the hole where the lubrication fitting was removed, whichever occurs first.		
6. Reinstall the lubrication fittings. Tighten until snug and remove any excess grease.		
NOTE: Make sure the ball of each lubrication fitting is properly seated.		
7. Reinstall the lubrication fitting cap on each lubrication fitting.		
8. Reinstall propeller spinner in accordance with the Hartzell Propeller Owner's Manual 149.		

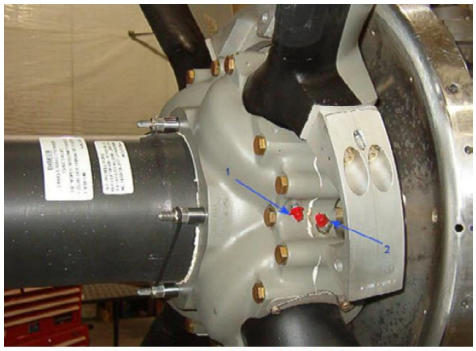

Figure 61-8 — Propeller Hub Lubrication Points

ACFT TYPE		ANNUAL INSPECTION REQUIREMENTS	MECH	INSP
ALL	81	Fresh Air Inlet System: Inspect clamps, hoses, valve, inlet, and ventilation system for proper condition and security of installation. Lubricate the inlet valve with LPS 1.		
ALL	82	Engine Electrical Cables: Inspect for proper routing, security, condition, and support. Check security of connections and condition of connector hardware.		
ALL	83	Battery Cables: Inspect for security, condition and routing. Inspect battery terminal boots for deterioration, overheating, or burning.		
ALL	84	Alternator: Inspect mounting for proper security, condition, and leaks. Check terminal boot for security and condition. Inspect electrical leads for damage and security.		
ALL	85	Sealed Lead Acid Batteries: Inspect batteries for general security and condition. Check battery terminals for evidence of overheating and burning.		
ALL	86	External Power Receptacle and Cables: Inspect for security and general condition		
ALL	87	Master Control Unit: Inspect cables for proper routing, support, corrosion, and security of connections. Inspect terminal boots for deterioration, overheating, or burning. Check mounting security of MCU box.		
ALL	88	Battery Boxes: Inspect for corrosion, security, and condition. Inspect battery hold-down mechanism for proper function.		
ALL	89	Firewall Mounted Fuel Filter: Inspect for leaks, corrosion, security of installation, and general condition. Inspect and clean filter.		
ALL	90	Brake System Reservoir: Check for security of installation, condition, and leaks. Check for proper fluid level and any contamination.		
ALL	91	Propeller Governor and Overspeed Governor: Inspect for leaks, security, and condition. Inspect security of installation on electrical connections.		
ALL	92	Np Tachometer Generator: Inspect for leaks, condition, and security of installation.		

DOI - KODIAK 100 SERIES - ANNUAL INSPECTION

ACFT TYPE		ANNUAL INSPECTION REQUIREMENTS	MECH	INSP
ALL	93	Np Tachometer Generator Wiring: Inspect the electrical wiring for proper routing, chafing, and security of installation; check electrical connections for security of installation.		
ALL	94	Engine Compartment: Inspect for leakage, general condition, damage, and security.		
ALL	95	Engine Cowlings: Inspect structure and fasteners for security and condition. If the nose cowling heat blanket is installed, inspect for security of installation. If the nose cowling heat blanket is not installed, inspect the interior of the nose cowling for delamination, major discoloration and blistering. If damage or defects are detected, refer to Quest Recommended Service Bulletin SB11-01.		
ALL	96	Tubular Engine Mounts: Inspect for signs of corrosion, cracks, and security of installation. Inspect for signs of abrasion or wear.		
ALL	97	Engine Vibration Isolators and Ground Straps: Inspect for deterioration of rubber vibration isolators. Inspect for security of installation and condition.		
ALL	98	Bungee Firewall Sleeve: Inspect for condition and security of installation.		
ALL	99	Engine Firewall: Inspect for cracks, condition, and signs of damage. Check for cracked or deteriorated firewall sealant.		
ALL	100	Induction Air Plenum: Remove access shroud, inspect for condition, security of installation, and cracks.		
ALL	101	Chip Detector Annunciation: Perform annunciation test (If Equipped).		
ALL	102	Chip Detector: Remove from nose case and visually inspect for foreign material. Perform chip detector functional test.		
ALL	103	Engine Air Inlet Screen: Inspect for security of installation, condition, and cleanliness. (If inlet screen is dirty the compressor section is likely to also be dirty, and a compressor wash is recommended).		
ALL	104	Gas Generator Case: Inspect for corrosion, distortion, and cracks.		
ALL	105	Accessory Gearbox Breather Line: Inspect for condition and security of installation.		
ALL	106	Engine Accessories: Inspect for leakage, condition, and security of installation.		
ALL	107	Engine Fuel Lines: Inspect motive flow and fuel supply lines for chafing, deterioration, fuel leaks, and security of installation.		
ALL	108	Inspect fuel nozzles as instructed below.		
		CAUTION: USE EXTREME CARE WHEN HANDLING FUEL NOZZLE ASSEMBLIES SINCE EVEN FINGERPRINTS ON THE ORIFICE MAY PRODUCE POOR SPRAY PATTERN. CLEAN, LINT FREE GLOVES SHOULD BE WORN AT ALL TIMES WHEN HANDLING PARTS.		
		A. Fuel Nozzle Assembly		
		(1) Check the nozzle assembly for burrs and similar defects. Threads and hexagon may be lightly stoned to remove nicks and burrs.		
		B. Nozzle Sheath (Ref. Fig. 206)		
		(1) Erosion, any loss of coating is acceptable provided any loose coating is removed by light buffing and 0.040 inch minimum dome thickness is retained .		
		(2) Fretting wear, maximum permissible depth is 0.010 inch; deburr raised material.		
		C. Manifold Adapter		
		(1) Check the locating pin for security in the adapter and for burrs and similar defects. Check threads for damage.		
		D. Transfer Tubes (Ref. Fig. 207)		
		(1) Examine for general condition and check preformed packing grooves and lands for damage. Minor surface damage in the form of burrs and scratches, may be removed by blending.		
		(2) Inspect for bent transfer tubes (1) as follows:		
		(a) Put the transfer tube on flat surface and roll the transfer tube. If an elliptical motion is produced at any point along the tube, reject the tube.		

	MECH	INSP
(3) Inspect condition of external anodic finish.		
(4) Examine the bore of each tube is free from blockage. Install the cap on the transfer tube (1) after inspection.		

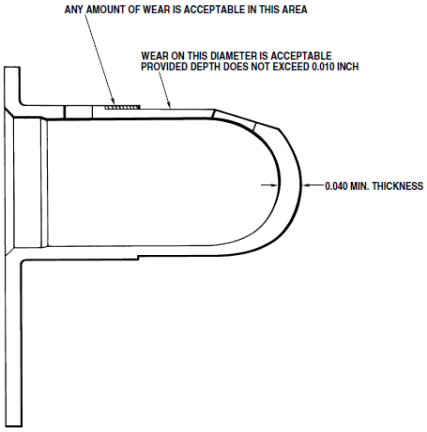

Nozzle Sheath Wear Limits
Figure 206

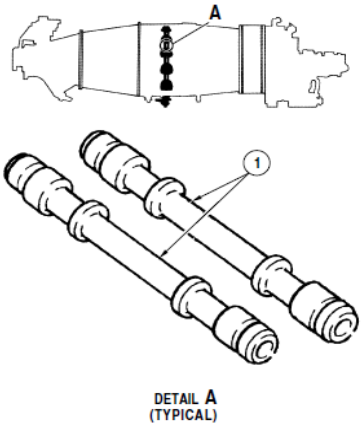

Fuel Manifold Transfer Tube
Figure 207

ACFT TYPE		ANNUAL INSPECTION REQUIREMENTS	MECH	INSP
ALL	109	Flow Divider: Inspect for fuel leaks and security of installation.		
ALL	110	EPA and Oil Drain Sump Cans: (If Equipped) Inspect can for leakage, condition, and security of installation. Completely drain can.		
ALL	111	EPA Can/Ejector Assembly: (If Equipped) Inspect assembly for leakage, condition, and security of installation. Completely drain can. Ensure that the alternate vent at the top of the ejector assembly is clean and free from debris.		
ALL	112	Engine System Drain Lines: Inspect the engine oil and fuel drain lines for proper routing of lines, deterioration of hoses, security of installation, and signs of leaks or damage.		
ALL	113	Inspect the mounting lugs visually for cracks and other defects. Cracks are not permissible; minor surface damage may be repaired.		
ALL	114	Inspect the machined mounting faces for gouges, nicks, scores, scratches, and similar surface defects which can damage the gasket between the pump and accessory gearbox and/or prevent proper mating of the fuel control unit to the pump. Particular attention should be paid to the seal recess at the bypass port between the studs in mounting face for the fuel control unit.		
ALL	115	Inspect the bore of the inlet port for damage on the sealing surface.		
ALL	116	Check the studs for security and for damage to the threads.		
ALL	117	Inspect the seal seepage drain port and fuel outlet port adapter for damage to the threads.		
ALL	118	Check for leakage from seal drain port:		
		(a) Coupling drive oil leaks from fuel pump drain should not exceed 3 cc per hour. If limits are exceeded, replace plain seal on accessory gearbox pad. If leaks are still present and exceed limits, ship unit for overhaul.		
		(b) Fuel leaks should not exceed 20 cc per hour. If leakage exceeds limit, ship fuel pump for overhaul. **NOTE:** If limit is exceeded, inspect FCU driveshaft bearing area for fuel contamination.		
		(1) Examine mounting flange, housing and components of lever mechanism for cracks and other surface defects. Cracks are not permissible; minor defects may be repaired.		
		(2) Examine ports for damage to internal threads and, if evident, send unit for rectification at an overhaul facility.		
		(3) Examine elbow fittings for damage to threads.		
		(4) Examine external surfaces for corrosion and for general condition of anodic treatment.		

	MECH	INSP
(5) Traces of blue grease on the driveshaft bearing face and retaining plate are acceptable. Presence of grease, with a hard or jelly-like consistency, indicates that the area has not been contaminated by excess fuel or oil and the driveshaft bearing stays lubricated.		
(6) Check that the drive shaft turns smoothly by spinning with light finger force. The driveshaft should stop turning when finger force is released.		
NOTE: A free spinning driveshaft indicates that the bearing has been subjected to lubricant wash-out and this is cause for rejection. Send the unit for rectification to an approved overhaul facility.		
(7) Check the drive couplings and FCU driveshaft for worn splines. Reject unit if any wear is found.		
(8) Brinelling of the driveshaft bearing is cause for rejection. Send the unit for rectification to an approved overhaul facility.		

ACFT TYPE		ANNUAL INSPECTION REQUIREMENTS	MECH	INSP
ALL	119	Inspect the splines on the drive coupling for nicks, gouges and chips.		
ALL	120	Examine the external surfaces of the pump for corrosion and for the general condition of the anodic treatment.		
ALL	121	Check for signs of leakage from the joint between the pump cover and pump housing. If leakage is evident, return the pump for overhaul.		
ALL	122	Examine the inlet filter element for damage and/or breaks in the screen mesh.		
ALL	123	The discharge filter is disposable and should be subjected only to visual examination for defects if the life of the part has not expired.		
ALL	124	Check that flexible hoses are fitted to avoid interference with the operation of the reversing linkage mechanism (Ref. 76-10-00).		
ALL	125	Sundstrand Fuel Pump Coupling In-Situ Inspection - Remove the drain line and fitting from the fuel pump drain port (2, Fig. 202). **CAUTION:** IF A COTTON SWAB OR SIMILAR DEVICE IS USED FOR THIS INSPECTION, CARE MUST BE TAKEN TO MAKE SURE NO FOREIGN MATTER REMAINS IN THE DRAIN PORT OR ASSOCIATED FITTINGS AND LINES.		

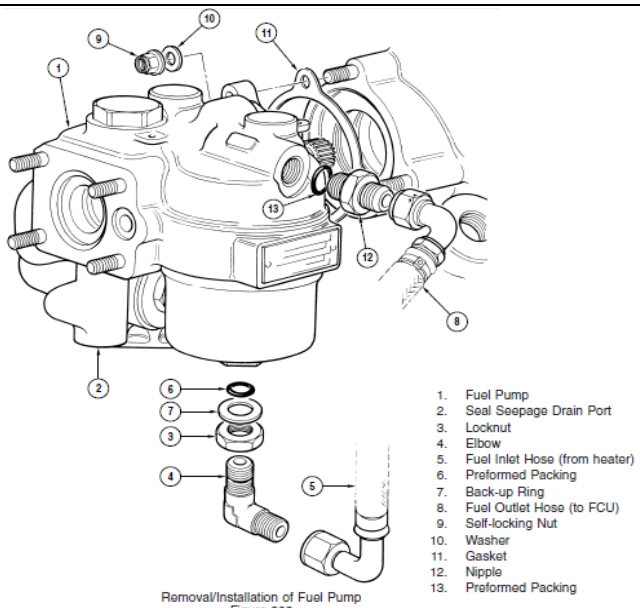

Removal/Installation of Fuel Pump
Figure 202

ACFT TYPE		ANNUAL INSPECTION REQUIREMENTS	MECH	INSP
ALL	126	Insert a cotton swab, or equivalent, 1.0 to 1.5 in. deep into the drain port of the fuel pump (Ref. Fig. 203).		
ALL	127	Angle the cotton swab (Ref. Fig. 203) and roll it inside the drain port to collect evidence of a possible reddish-brown deposit (iron oxide).		

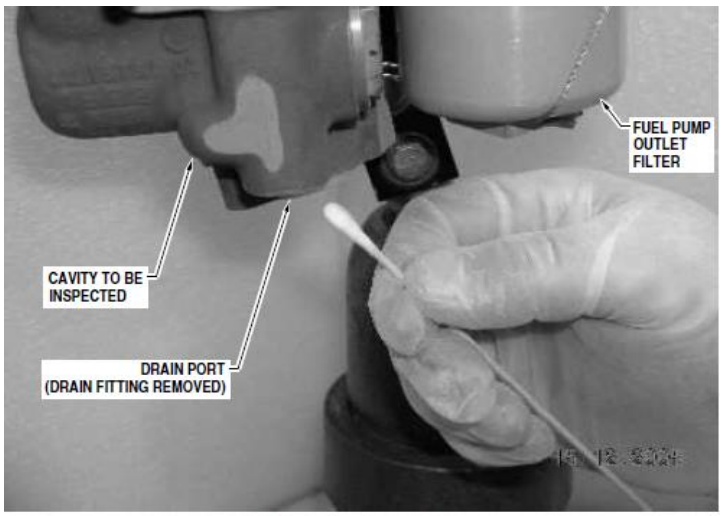

Fuel Pump In-situ Inspection
Figure 203

ACFT TYPE		ANNUAL INSPECTION REQUIREMENTS	MECH	INSP
ALL	128	If no reddish-brown (iron oxide) stain is evident, the fuel pump may remain in service. **CAUTION:** DO NOT REMOVE THE FUEL PUMP COUPLING. REMOVAL MAY CAUSE CHIPPING OF THE SPLINES AND/OR LOSS OF THE CIRCLIP RETENTION. THE CIRCLIP ALLOWS VERY LIMITED MOVEMENT OF THE PUMP COUPLING.		
ALL	129	If a reddish-brown (iron oxide) stain is evident:		
		Remove fuel pump.		
		(b) Examine the input coupling shaft area of the pump face (Ref. Fig. 201) for residue from fretting corrosion (iron oxide deposit). If none is present, the pump may remain in service.		
		(c) Evidence of corrosion residue indicates possible spline wear. Return the fuel pump to an approved overhaul facility.		
		(d) Install a replacement fuel pump.		

Removal/Installation of Fuel Pump Filters
Figure 201

ACFT TYPE		ANNUAL INSPECTION REQUIREMENTS	MECH	INSP
ALL	130	Drain Vents: Inspect vents on lower portion of cowlings for cleanliness and obstructions.		
ALL	131	Fuel Manifold: Inspect for evidence of fuel leaks and security of installation.		
ALL	132	Firewall Fuel Shutoff Control: Perform an operational check as outlined in Systems Checks/Tests of this chapter.		

TITLE:	Firewall Fuel Shutoff Control Operational Check Procedure	MECH	INSP
INSPECTION INSTRUCTIONS	1. Operate the control to check for freedom of movement and positive engagement of the shutoff valve at the firewall.		
	2. With the firewall shutoff valve closed, open the drain valve on the firewall mounted fuel filter. Verify proper operation of the shutoff valve by checking that only a small amount of fuel flows from the filter drain valve.		

ACFT TYPE		ANNUAL INSPECTION REQUIREMENTS	MECH	INSP
ALL	133	P3 Filter: Clean and inspect for general condition.		
ALL	134	PY and P3 Line Heater Check: Perform an operational check of PY and P3 heaters.		
ALL	135	Fuel Control Unit: Inspect for fuel leaks and security of installation.		
ALL	136	Fuel Control Unit: Inspect for bearing washout (indicated by leakage of a mixture of blue dyed grease and fuel) at the FCU vent.		
ALL	137	FCU Manual Override: Perform FCU Manual Override System static check.		
ALL	138	Fuel Flow Transducer: Inspect for fuel leaks, evidence of damage and security of installation.		
ALL	139	Ignition Exciter Box: Inspect for proper condition and security of installation.		
ALL	140	Ignition Exciter Unit Wiring Harness: Inspect for proper routing, condition and security of electrical connections.		
ALL	141	Ignition Cables: Remove ignitor box and ignitor cable ends. Inspect for wear, chafing, security, and proper routing. Clean contact ends as instructed below.		
		(1) Inspect cables for signs of damage to braiding and general condition.		
		(2) Inspect cable coupling nuts for corrosion.		
		(3) Inspect central conductor and insulation for contamination and burning.		
		(4) Do retention test on igniter end of cable only:		
		(a) Mate an igniter plug to the end of the cable, but do not attach it.		
		CAUTION: DO NOT LET THE IGNITER PLUG DROP TO THE GROUND WHEN PERFORMING THE NEXT STEP.		
		(b) The igniter plug must remain in place when pointed toward the ground.		
		(c) Positive retention must exist between the ignition cable terminal and the igniter plug. Do retention test again with new igniter plug if necessary. Replace ignition cable if not successful.		

ACFT TYPE		ANNUAL INSPECTION REQUIREMENTS	MECH	INSP
ALL	142	Inspect spark igniters as instructed below.		
		(1) Inspect the exterior cylindrical area of the firing end of the igniter shell for chafing wear. Wear is acceptable to a depth of 0.015 inch.		
		(2) Inspect the igniter shell and electrode for erosion (Ref. Fig. 204 and Table 202). If erosion equals or exceeds amounts shown, reject the spark igniter.		
		(3) Do a functional test on acceptable and replacement spark igniters.		

CAUTION:

SHOULD AN IGNITER PLUG BE DROPPED, INTERNAL DAMAGE, POSSIBLY NOT DETECTABLE BY TEST, CAN OCCUR. RECOMMENDATION IS TO REPLACE THE IGNITER PLUG.

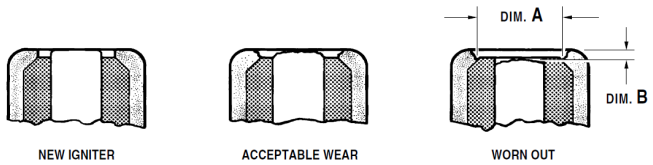

TABLE 202, Spark Igniter Erosion Limits

P&WC PART NO.	VENDOR NAME AND PART NO.	DIM. A (IN)	DIM. B (IN)
* 3014986	Champion: FHE-182	0.3437	0.0312
* 3024706	A.C.: 5611760	0.2750	0.1000
** 3027280	Champion: CH34055	0.3000	N/A
** 3031213	Bendix: 10-390667-1	0.3000	N/A

* Earlier parts supplied under ordering Part No. 3014981.

** Later parts supplied under ordering Part No. 3032096. Igniters eroded beyond limits should be replaced by latest part(s), if available.

ACFT TYPE		ANNUAL INSPECTION REQUIREMENTS	MECH	INSP
ALL	143	Engine Controls: Check for proper operation, freedom of movement and that full range of motion is attained. Check that component stops are reached prior to the cockpit control stops. Inspect for security of installation, corrosion, wear, evidence of damage, proper routing and any deterioration.		
ALL	144	Engine and Propeller Control Linkages and Attach Brackets: Inspect for wear, corrosion, freedom of movement, security of installation and general condition.		
ALL	145	Engine Control Rod Ends: Inspect for corrosion, freedom of movement, and radial play. Lubricate the rod ends with LPS-1. * Engine Control Rod Ends must also be lubricated following each external engine wash.		
ALL	146	Propeller Reversing Cam: Check for proper operation, clean and lubricate with Lubriplate 630AA.		
ALL	147	Torque Transmitter: Inspect for leakage, condition and security of installation.		
ALL	148	Torque Indicator Plumbing: Inspect for leakage, damage, condition and security of installation.		
ALL	149	Trim Thermocouple: Inspect for condition and security of installation.		
ALL	150	Ng Tachometer Generator Wiring: Inspect the electrical wiring for proper routing, chafing and security of installation; check electrical connections for security of installation.		
ALL	151	T5 Terminal Block and External Wiring: Inspect for chafing, security, and general condition. Conduct inspection as instructed below.		
		(1) Inspect the installed bus-bar probe assembly for security and signs of damage. Damaged probes will necessitate individual replacement. Loose terminal posts and missing insulation may be repaired.		
		(2) T5 wiring harness inspection:		
		(a) Examine the harness for broken or damaged braiding and/or insulation. Stainless braiding that is lifted or broken may be cut away, provided insulation remains intact.		
		(b) Examine the terminal block for security to the harness leads, loose terminals and missing insulation. Replace missing insulation and secure loose terminals.		
		(c) Examine terminal lugs for condition. Replace loose or damaged lugs.		
		(3) Trim thermocouple inspection:		
		(a) Inspect the trim thermocouple leads for damage to the outer covering and loose or damaged terminal lugs. Check the probe outer casing for damage and corrosion, and the flange for security.		
		(4) Bus-bar inspection:		
		(a) Bus-bar insulation resistance must not be less than 50,000 ohms.		
		(b) Check bus-bar for breaks, kinks, damage or loose bracket.		
		(c) Return defective bus-bar for possible repair to the following P&WC facility: P&WC Accessories Services 333 Rue D'Auvergne (Area 2K) Longueuil, Quebec Canada J4H 3Y3		

ACFT TYPE		ANNUAL INSPECTION REQUIREMENTS	MECH	INSP
ALL	152	Engine Exhaust: Inspect ducts for cracks, distortion, evidence of damage, and security of installation.		
ALL	153	Oil Filter Element: Remove filter element and inspect for damage and debris. Clean filter.		
ALL	154	Oil Filler Cap and Dipstick: Inspect for proper condition and security of installation.		
ALL	155	Oil Cooler: Inspect for signs of damage and security of installation. Inspect ducting and seals for proper condition and security of installation.		
ALL	156	Oil Pressure Sensors: Inspect plumbing for leakage, condition and security of installation. Inspect the electrical connections for evidence of damage, condition and security of installation.		

DOI - KODIAK 100 SERIES - ANNUAL INSPECTION

ACFT TYPE		ANNUAL INSPECTION REQUIREMENTS	MECH	INSP
ALL	157	Oil Temperature Sensor: Inspect for leakage, proper condition and security of installation. Inspect electrical connection for evidence of damage, condition and security of installation.		
ALL	158	Starter-Generator: Inspect terminal block, boots, and electrical connections for security of installation, cleanliness, signs of overheating or arcing, and other damage.		
ALL	159	Starter-Generator: Inspect the electrical cables for proper routing, condition and support. Inspect connector hardware for security of installation and condition.		
ALL	160	Bleed Air Silencer (If Equipped): Inspect for proper mounting and visually inspect for security of installation.		
ALL	161	Fwd. and Aft Ventilation Blowers: Inspect units for security of installation. Inspect wiring for security and signs of damage.		
ALL	162	Cabin Overhead Ventilation Outlets: Inspect for proper operation, security of installation and condition.		
ALL	163	Avionics Cooling Ducts: Inspect for security of installation and proper condition.		
ALL	164	Instrument Panel Ventilation Air Outlets and Controls: Inspect outlet controls for proper operation, condition, and security of installation.		
ALL	165	Autopilot Actuation System (If Equipped): Inspect bridle cables for chafing, fraying, general cleanliness, and proper routing. Inspect drive pulleys and guard pins for proper condition, abnormal wear, security of installation and signs of corrosion. Inspect electrical components for proper operation, condition, and security of installation.		
ALL	166	Autopilot Aileron Actuator/Motor: Inspect for proper condition, security of installation and signs of overheating.		
ALL	167	Autopilot Roll Servo Bridle Cable Idler Pulley and Guard Pin (If Equipped): Inspect for abnormal wear, proper operation, and security of installation.		
ALL	168	Autopilot Elevator Actuation System: Inspect bridle cables for chafing, fraying, general cleanliness and proper routing. Inspect drive pulleys and guard pins for proper condition, abnormal wear, security of installation and signs of corrosion. Inspect electrical components for proper operation, condition, and security of installation.		
ALL	169	Autopilot Elevator Actuator/Motor: Inspect for proper condition, security of installation and signs of overheating.		
ALL	170	Yaw Damper Actuation System: Inspect bridle cables for proper cable tension, chafing, fraying, general cleanliness, and proper routing. Inspect drive pulleys and guard pins for proper condition, abnormal wear, security of installation, and signs of corrosion. Inspect electrical components for proper operation, condition, and security of installation.		
ALL	171	Yaw Damper Actuator/Motor: Inspect for proper condition, security of installation, and signs of overheating.		
ALL	172	Microphones, Headsets, and Jacks: Inspect for proper condition, cleanliness, and security of installation.		
ALL	173	Main Fuselage Wiring: Inspect for chafing, overheating, proper condition, and security of installation at electrical connections and support clamps.		
ALL	174	Floor Coverings: Inspect for proper condition, security of installation, and cleanliness.		
ALL	175	Sub-Floor Area: Clean thoroughly.		
ALL	176	Pilot, Copilot, and Passenger Restraints: Inspect pilot and copilot inertia reels for proper operation. Inspect pilot, copilot and passenger seat belts and shoulder harnesses for condition, frayed edges, signs of damage, and proper operation.		
ALL	177	Pilot and Copilot Inertia Reels: Inspect for proper security of installation, proper routing, and security of release cable housing.		
ALL	178	Pilot, Copilot, and Passenger Seats: Inspect seat brackets, guides, and stops for security and condition. Inspect controls for security, condition and proper operation. Inspect the seat structure and seat cushions for proper condition and security. Service the seat position adjusting screws, bearings and locking mechanisms.		
ALL	179	Pilot and Copilot Seat Back Stop Mechanism: Inspect for loose or missing hardware and proper condition.		
ALL	180	Seat Rails: Inspect seat rails and stops for proper condition and security of installation. Inspect seat rail stops for proper location, security and installation. Clean and lubricate the crew seat rails with LPS 1.		
ALL	181	Cargo Tie-Down (If Equipped): Inspect for proper condition and security of installation.		
ALL	182	Cargo Nets (If Equipped): Check for proper operation of adjusting mechanisms, proper condition, and security of installation.		

DOI - KODIAK 100 SERIES - ANNUAL INSPECTION

ACFT TYPE		ANNUAL INSPECTION REQUIREMENTS	MECH	INSP
ALL	183	Engine Exhaust: Inspect ducts for cracks, distortion, evidence of damage, and security of installation.		
ALL	184	Circuit Breaker Panels: Inspect wiring and terminals for proper condition and security of installation.		
ALL	185	Control Column: Inspect control column assembly forward and aft of the instrument panel for condition and security of installation. Operate the control wheel in all directions while inspecting all moving components to verify proper operation and freedom of movement. Inspect bearing and wear surfaces for proper condition. Replace as needed.		
ALL	186	Control Column: Lubricate the control column track with LPS 3.		
ALL	187	Aileron Control Cables (Fuselage and Control Column Section): Inspect the cables for chafing, fraying, cleanliness, turnbuckle safetying, and proper routing. Inspect pulleys and cable guards for wear, corrosion, proper condition, and security of installation.		
ALL	188	Autopilot Cutoff Relay (If Equipped): Inspect relay for security of installation, signs of electrical damage or other damage, and proper operation.		
ALL	189	Aileron Trim System Wiring (Control Pedestal): Inspect electrical wiring for chafing, sharp bends, proper condition, routing, and security of installation.		
ALL	190	Rudder Pedals and Rudder Pedal Linkage: Inspect for proper condition and security of installation. Operate rudder pedals to verify freedom of movement and full range of travel.		
ALL	191	Rudder Control System: Check connections for security and fastener torques where applicable.		
ALL	192	Electric Rudder Trim and Indicator: Inspect the trim system for proper condition and security of installation. Operate the trim to verify proper operation, freedom of movement and full range of motion. Check that the trim system contacts the limit switches prior to hitting the hard stops on the bungee collar. Verify the indicator functions properly.		
ALL	193	Rudder Cables (Fuselage): Inspect for deterioration. Inspect the cables for chafing, fraying, cleanliness, turnbuckle safetying, and proper routing. Inspect pulleys and cable guards for wear, proper condition, security of installation, and signs of corrosion.		
ALL	194	FWD Elevator Sector: Inspect the forward elevator sector, bearings, pushrod, brackets, and stop bolts for corrosion, evidence of damage, failed fasteners, and security of installation; proper safetying of bellcrank; inspect pushrod bolts for proper safetying of nuts with cotter pins.		
ALL	195	Flap Control System: Inspect the flap control lever for proper condition, security of installation, travel, and signs of damage.		
ALL	196	Flap Gearbox/Controller: Inspect the gearbox controller unit for security of installation and signs of exterior damage. Inspect electrical connections for security and condition.		
ALL	197	Control Pedestal Wiring: Inspect control pedestal components for proper electrical connections and terminals for proper condition and security of installation.		
ALL	198	Fuel Reservoir Bladder: Inspect bladder and plumbing for signs of leakage, proper condition, and security of installation.		
ALL	199	Auxiliary Fuel Pump Bay: Check auxiliary fuel pump, pressure switch and check valves for signs of damage, proper condition and security of installation.		
ALL	200	Fuel Selector Controls and Linkages in Cabin: Inspect linkage and controls for proper operation, condition, and security of installation.		
ALL	201	Firewall Fuel Shutoff Valve: Inspect linkage and valve for signs of damage and proper operation. Inspect valve for leakage. Inspect security and condition of hardware that connect the push-pull cable to the shutoff valve.		
ALL	202	Parking Brake Control and Valve: Inspect for proper condition, security of installation, leakage and freedom of movement. Check for proper operation.		
ALL	203	Squat Switch (If Equipped): Inspect squat switch for proper operation, condition, security, and signs of damage.		
ALL	204	Remote Mounted Avionics Units (Fuselage): Check units for security of installation, proper condition, and signs of damage. Check electrical connections for proper installation and proper routing of wires.		
ALL	205	Instrument Panel Mounted Avionics Units and Instruments: (Includes the PFD's, MFD, audio panels, autopilot, magnetic compass, and standby instruments.) Inspect for deterioration, cracks and security of installation of units in instrument panel. Inspect for security of installation of electrical connections and proper routing of wiring.		
ALL	206	Instrument Panel Mounted Avionics Units: Clean as outlined in Section 8 of the POH/AFM.		
ALL	207	Radio and electronic equipment - for improper installation and insecure mounting.		
ALL	208	Wiring and conduits - for improper routing, insecure mounting, and obvious defects.		

DOI - KODIAK 100 SERIES - ANNUAL INSPECTION

ACFT TYPE		ANNUAL INSPECTION REQUIREMENTS	MECH	INSP
ALL	209	Bonding and shielding - for improper installation and pooor condition.		
ALL	210	Antenna including trailing antenna - for poor condition, insecure mounting, and improper operation.		
ALL	211	Pitot and Static Drain Valves: Inspect for proper operation, security and signs of damage. Visually inspect for leaks and presence of water in valve. Drain any accumulated water.		
ALL	212	Stall Warning Horn and Stall Warning Horn Relay: Inspect the warning horn and relay for proper condition, security of installation, and signs of damage. Inspect horn grill cover for proper condition and security of installation. (Ground check only.)		
ALL	213	Stall Warning Computer (If Equipped): Inspect for security of attachment, damage, and proper operation.		
ALL	214	Oxygen Control System: Inspect the pressure regulator and its control panel for proper condition security of installation and operation. Check oxygen flow from each outlet.		
ALL	215	Crew Doors: Inspect for proper operation, condition and security of installation.		
ALL	216	Crew Door Hinges, Latch Pins and Strike Plates: Check for proper operation, inspect for signs of excessive wear, cracks and damage.		
ALL	217	Crew Door Locks: Inspect for proper operation of the keyed locking mechanisms. Lubricate the locking mechanisms and locking pivots with LPS 1.		
ALL	218	Crew Doors Latch Pin Receptacles: Inspect for cracks, signs of excessive wear and damage.		
ALL	219	Crew Door Hinges: Lubricate the crew door hinge points with LPS 1.		
ALL	220	Crew Door Stop Assemblies: Inspect for proper operation, condition and security of installation.		
ALL	221	Crew Door Seals: Inspect for excessive wear, abrasions, cuts, and security of installation.		
ALL	222	Crew Door Entrance Steps: Inspect for proper operation and security of installation.		
ALL	223	Cargo Doors: Inspect for proper operation, condition and security of installation.		
ALL	224	Cargo Door Lock: Inspect for proper operation of the keyed locking mechanisms. Lubricate the locking mechanisms and locking pivots with LPS 1.		
ALL	225	Cargo Door Latch Pin Receptacle: Inspect for cracks, signs of excessive wear and damage.		
ALL	226	Cargo Door Hinges: Lubricate the cargo door piano hinges with LPS 1.		
ALL	227	Cargo Door Hinge, Latch Pin and Strike Plates: Check for proper operation, inspect for signs of excessive wear, cracks and damage.		
ALL	228	Cargo Door Stop Assemblies: Inspect for proper operation, condition and security of installation.		
ALL	229	Cargo Door Seals: Inspect for excessive wear, abrasions, cuts, and security of installation.		
ALL	230	Cargo Door Entrance Steps: Inspect for proper condition and security of installation. Lubricate the cargo door step hinge points with LPS 1.		
ALL	231	Control Pedestal Structure: Inspect for proper condition and security of installation.		
ALL	232	Main Fuselage Drain Holes: Inspect for corrosion and any obstructions.		
ALL	233	Windshield and Windows: Inspect for proper condition, security of installation and debond areas. Inspect pilot's storm window for proper operation and sealing.		
ALL	234	ELT: Inspect for security of installation, condition of electrical components and position of the function switch. Inspect the ELT structure for corrosion. Check cumulative time and useful life of battery in accordance with 14 CFR Part 91.207.		
ALL	235	Rudder Cables (Aft Fuselage): Inspect for deterioration. Inspect the cables for chafing, fraying, cleanliness, turnbuckle safetying, and proper routing. Inspect pulleys and cable guards for wear, proper condition, security of installation, and signs of corrosion.		
ALL	236	ELT: Perform an operational test; in accordance with 14 CFR Part 91.207.		
ALL	237	Elevator Cables (Aft Fuselage): Inspect cables in tailcone for fraying, chafing, cleanliness, turnbuckle safetying, and proper routing. Inspect pulleys and their guard pins for wear, corrosion, proper condition, and security of installation.		

DOI - KODIAK 100 SERIES - ANNUAL INSPECTION

ACFT TYPE		ANNUAL INSPECTION REQUIREMENTS	MECH	INSP
ALL	238	Elevator Trim Tab Cables (Fuselage): Inspect the cables in the fuselage for chafing, fraying, cleanliness, proper routing, and safetying of turnbuckles. Inspect pulleys and cable guards for wear, corrosion, proper condition, and security of installation.		
ALL	239	NAV/COM/GPS/Avionics/ELT Antennas: Inspect for proper condition, cleanliness, and security of installation. Inspect for signs of damage or cracking.		
ALL	240	Oxygen System: Inspect components for proper condition and security of installation. Inspect the shutoff valve and regulator for proper condition, security of installation, and operation.		
ALL	241	Electric Cabin Heat: Inspect wiring for proper condition and security of installation. Inspect electrical connections for proper attachment.		
ALL	242	Aft Fuselage Drain Holes: Inspect for corrosion and obstructions.		
ALL	243	Rudder: Inspect the rudder hinges for cracks, proper condition, and security of installation. Inspect the hinge bolts, hinge bearings, hinge attach fittings, and bonding jumpers for evidence of damage or unusual wear. Inspect for failed fasteners and proper safetying of nuts with cotter pins. Inspect the rudder skins for cracks and loose rivets. Inspect balance weight for security and condition.		
ALL	244	Rudder Sector: Inspect the sector stop bolts for corrosion, signs of damage, and security of installation. Inspect the nuts attached to the sector for proper safetying with cotter pins.		
ALL	245	Aft Elevator Sector: Inspect aft sector, bearings, pushrod, stop bolts, and brackets for corrosion, failed fasteners, evidence of damage, and security of installation. Inspect the pushrod bolts for proper safetying of nuts with cotter pins. Lubricate the lower rod end connection with LPS 1. Inspect for presence of the elevator down stop rubber bumper on the elevator bellcrank.		
ALL	246	Elevator: Inspect elevator skins for cracks, condition, and loose rivets; elevator hinges for condition, security, and cracks; and hinge bolts, hinge bearings, torque tube horn, attach fittings, and bonding jumpers for evidence of damage or unusual wear, failed fasteners, and security of installation. Inspect elevator hinge bolts for proper safetying of nut with cotter pins. Inspect supporting structure for signs of damage. Inspect balance weights for security and condition.		
ALL	247	Elevator Control System: Check pushrod joints for security of installation. Check fasteners for proper security.		
ALL	248	Elevator Trim Tabs: Inspect the trim tab skins for cracks, loose rivets, and security of installation. Inspect the trim tab hinge for security, cracks, and corrosion. Inspect the hinge pin for properly centered installation. Inspect the pushrods for security and any signs of damage. Inspect the pushrod bolts for proper condition and safetying of nuts with cotter pins. Lubricate the trim tab piano hinges with LPS 1.		
ALL	249	Elevator Trim Tab Actuators: Inspect for proper condition and security of installation. Inspect attaching hardware for excessive wear and security. Perform elevator trim tab free-play inspection (maximum play allowed is 0.080”).		
ALL	250	Elevator Trim Tab Cables (Tailcone): Inspect cables for chafing, fraying, proper safetying of turnbuckles, cleanliness, and proper routing. Inspect chains for proper safetying at all locations and chains for proper alignment on their sprockets. Inspect pulleys and cable guards for proper condition, wear, corrosion, and security of installation.		
ALL	251	Aft Fuselage Wiring: Inspect for chafing, overheating, proper condition, and security of installation at electrical connections and support clamps.		
ALL	252	Vertical and Horizontal Stabilizers: Inspect the structures and their attach points for security and condition. Inspect vortex generators for condition and security.		
ALL	253	Static Discharge Wicks and Control Surface Bonding Straps: Inspect for proper condition and security of installation. Perform High Resistance Check.		
ALL	254	Flight Control Systems Rod End Connections: Check for proper condition and freedom of movement. Lubricate with LPS 1.		
ALL	255	Ailerons: Inspect aileron hinges for proper condition, cracks, and security of installation. Inspect the hinge bolts, hinge bearings, hinge attach fittings, and bonding jumpers for evidence of damage, unusual wear, failed fasteners, and security of installation. Inspect the aileron skins for cracks and loose rivets. Inspect balance weights for security and condition.		
ALL	256	Aileron Wing Cables: Inspect wing cables for chafing, fraying, cleanliness, turnbuckle safetying, and proper routing. Inspect pulleys and guards for wear, corrosion, proper condition and security of installation. Reposition pulleys in relation to cable to allow even wear of the pulley.		
ALL	257	Aileron Bellcranks: Inspect bellcranks for security of installation, corrosion, cleanliness, and signs of damage to cable guards. Inspect cable attach points and attaching hardware for proper wear, condition and security of installation.		
ALL	258	Aileron Control (Wings): Inspect pushrod joints for security of installation and proper installation of fasteners.		

DOI - KODIAK 100 SERIES - ANNUAL INSPECTION

ACFT TYPE		ANNUAL INSPECTION REQUIREMENTS	MECH	INSP
ALL	259	Aileron Trim Tab: Inspect the trim tab skin for cracks, loose rivets, and security of installation; trim tab hinges for security of installation and signs of damage; hinge pin for proper installation in hinge pin retainer; horn and pushrod for signs of damage and security of installation; pushrod bolts for proper condition and proper safetying of nuts with cotter pins. Ensure no binding through full range of motion.		
ALL	260	Elevator Cables (Fuselage): Inspect cables for chafing, cleanliness, proper routing and turnbuckle safetying. Inspect pulleys and cable guards for wear, proper condition and security of installation. Rotate pulleys to reposition them relative to the cable, allowing for even wear on pulley.		
ALL	261	Cable Tension: Conduct cable tension checks.		
ALL	262	Flap Tracks: Inspect the flap tracks and rollers for flat spots, excessive wear, deformation, cracks, corrosion, and worn bearings. Lubricate the flap tracks using LPS 1.		
ALL	263	Flap Operating Mechanisms: Inspect cabin flexible drive shafts for proper condition, routing and security of installation.		
ALL	264	Flap Actuator Assemblies and Flap Gap Seals (Wing): Inspect for proper condition and security of installation of the flexible shafts. Inspect the flap actuator support structures for proper condition and security of installation. Inspect the fuselage gap seal assemblies for security and condition.		
ALL	265	Wing Fuel Tanks: Inspect for fuel stains or any evidence of fuel leaks. Check drain/vent holes in the lower wing skins just outboard of the wing tanks for signs of leakage and for cleanliness.		
ALL	266	Fuel Tank Filler Caps and Flapper Valves: Inspect for broken components or other damage. Check filler cap locking position and security of installation.		
ALL	267	Fuel Drain Valves: Check for proper operation and inspect for corrosion, leakage and proper sealing action.		
ALL	268	Fuel Selector Valves and Linkages: In the wing root area, inspect shutoff valves, controls and linkages for security, condition and signs of damage.		
ALL	269	Wing Tank Fuel Low Warning System: Inspect for damaged or corroded electrical components.		
ALL	270	Fuel Vent Line (Wings): Inspect for signs of damage, obstructions, and cleanliness.		
ALL	271	Low Fuel Sensor Inspection: Inspect left and right wing fuel sensors for condition and security of attachment. Inspect electrical connections for security and damaged or corroded electrical components.		
ALL	272	Fuel Lines (Cabin): Check lines for security of installation, proper condition and evidence of leakage.		
ALL	273	Magnetometers (Wings): Check units for security of installation, proper condition, and signs of damage. Check electrical connections for proper installation and proper routing of wires.		
ALL	274	Pitot/Static Tubes: Visually inspect tubes and static ports for obstructions. Inspect pitot masts for damage, security, and general condition.		
ALL	275	Pitot/Static System: Inspect plumbing for proper condition and security of installation.		
ALL	276	Stall Warning Lift Sensor (Vane-type or Lift Transducer, as equipped): Inspect for proper condition and security of installation.		
ALL	277	Wings: Inspect for loose rivets and fasteners, corrosion, cracks, wrinkles, and dents. If so equipped, inspect vortex generators for condition and security. Inspect attach points for proper security and condition.		
ALL	278	Wing Spar Attach Fittings: Inspect bolts for proper security and installation.		
ALL	279	Wing Strut: Inspect for security, condition, and signs of damage.		
ALL	280	Wing Access Panels: Inspect for signs of damage and security of installation.		
ALL	281	Wing Strut Fittings: Inspect attach bolts for security and condition.		
ALL	282	Wing Electrical Wiring: Inspect for chafing, overheating, proper condition, and security of installation at electrical connections and support clamps.		
ALL	283	Jack Point Installations: Inspect for proper condition and security of installation.		
ALL	284	Nose Gear Fairings: Inspect for proper condition and security of installation.		
ALL	285	Main Landing Gear Fairings: Inspect for proper condition and security of installation. Check for interference between the brake lines and fairings.		

ACFT TYPE		ANNUAL INSPECTION REQUIREMENTS	MECH	INSP
ALL	286	Main Landing Gear System: Inspect for general condition and security. Check that there is no free-play between the landing gear legs and trunnion. Check for security of nuts and cotter pin placement on trunnion mounting studs. Check for proper condition and any signs of damage at trunnion and gear legs. Lubricate the trunnion assemblies with Aeroshell Grease 22. ****Caution** DO NOT** pump more than three pumps of grease in the end caps. Inserting excessive amounts of grease into the end caps will pressurize the end caps which can damage the surrounding structure.		
TITLE:		Main Landing Gear Free-Play Check		

		MECH	INSP
INSPECTION INSTRUCTIONS	**NOTE:** If any free play occurs between a landing gear leg and the main gear trunnion, the landing gear may need to be replaced. To confirm any movement between the gear leg and the trunnion accomplished the following inspection:		
	1. Jack the aircraft in accordance with the appropriate Kodiak Manual.		
	2. If any free-play is detected, the landing gear leg/trunnion assembly must be replaced.		

ACFT TYPE		ANNUAL INSPECTION REQUIREMENTS	MECH	INSP
ALL	287	Nose Gear Drag Link: Inspect for corrosion, cracks and security of installation.		
ALL	288	Nose Gear Fork: Inspect for proper condition and security of installation.		
ALL	289	Nose Gear Shock Strut: Inspect for evidence of leakage and proper extension. Service as necessary. Inspect strut barrel for pitting and corrosion. Inspect for general condition and cleanliness. Wipe the nose strut chrome tube with a cloth lightly damp with MIL-H-5606 hydraulic fluid.		
ALL	290	Brake Lines and Plumbing: Inspect all lines for leaks. Inspect flexible hoses for bulges, deterioration, twists and kinks. Inspect rigid tubing for proper condition, security of installation and routing.		
ALL	291	Brake Assemblies: Check brake lining wear, check disk for proper condition and any warping. Inspect for signs of leakage.		
TITLE:		Brake Inspection		

		MECH	INSP
INSPECTION INSTRUCTIONS	1. Disassemble the brake as instructed in applicable Kodiak Manual.		
	2. Inspect the brake linings for deterioration. Ensure the wear is within the limits.		
	3. Replace the brake linings if worn to 0.100 inch or less.		
	4. Inspect the brake cylinder bores for signs of scoring and deterioration. Replace the cylinder assembly if the cylinders are scored.		
	5. Replace all packings, back-up rings, and O-rings when reassembling the brakes.		
	6. Reassemble the brake as instructed in appropriate Kodiak Manual.		

ACFT TYPE		ANNUAL INSPECTION REQUIREMENTS	MECH	INSP
ALL	292	Nose Landing Gear Tire and Wheel: Inspect for proper inflation pressure, wear and condition of tire. Inspect wheel for security of installation and condition.		
ALL	293	Main Landing Gear Tires and Wheels: Inspect for proper inflation pressure, wear, and condition of tire. Inspect wheel for security of installation and condition.		
ALL	294	Nose Landing Gear Wheel Bearings: Inspect for proper condition and repack. Lubricate the bearings with Mobil SHC 100 as instructed below.		
TITLE:		Brake Disk Inspection and Servicing		

		MECH	INSP
INSPECTION INSTRUCTIONS	**NOTE:** Under normal operations the brake disc should provide years of trouble-free service, however, operations in and out of unimproved strips, standing water, heavy industrial pollution, or infrequent use of the aircraft will require more frequent inspection of the brake discs in an effort to prolong the life of the brake linings.		

	MECH	INSP
A. Brake Disc Inspection: Check the disc for warping, disc faces for unusual wear beyond the minimum thickness of 0.537 inch. Check for grooves, deep scratches, excessive pitting corrosion, and coning of the brake disc. Coning in excess of 0.015 in either direction is cause for replacement. Isolated groves are considered allowable up to 0.030 inch deep. Heat checking is considered to be just superficial surface cracks and no not hinder brake performance. However, break replacement is necessary if any single crack is longer than 0.50 inch, or deeper than 0.25 inch. Replace the brake disc if more than three cracks are discovered on a disc. Replace the brake disc if more than one crack is found in a 90 degree quadrant of the disc.		
B. Brake Servicing: Rust will occur on the disc surfaces to a certain degree, and this is allowable. If powdery rust appears on the disk, normal taxiing and braking operation will remove this from the surface. If the rust is allowed to progress beyond the point where braking operation will remove it, it may be necessary to remove and clean both surfaces. Wire brushing by hand, followed by an application of 220 grit sandpaper can restore the brake disk surfaces to proper condition for use.		

ACFT TYPE		ANNUAL INSPECTION REQUIREMENTS	MECH	INSP
ALL	295	Main Landing Gear Wheel Bearings: Inspect for proper condition and repack. Lubricate the bearings with Mobil SHC 100 as instructed below.		
TITLE:		Wheel Bearings		

		MECH	INSP
INSPECTION INSTRUCTIONS	A. Wheel Bearings Removal:		
	1. Remove the snap rings, grease retainer seal, and the tapered roller bearing from the inboard wheel half.		
	2. Remove the snap ring, grease retainer seal, and the tapered roller bearing from the outboard wheel half.		
	NOTE: The bearing cups are press-fit into the wheel halves and should not be removed unless it is necessary to replace them.		
	3. For replacement of the bearing cup, heat the wheel half in boiling water for 15 minutes.		
	4. Press the bearing cup out with an arbor press, and press in a bearing cup while the wheel half is still hot.		
	B. Wheel Bearings Installation:		
	1. Before installation, grease bearings in accordance with the appropriate manual.		
	2. Replace the tapered roller bearing, grease retainer seal, and the snap ring onto the outboard wheel half.		
	3. Replace the tapered roller bearing, grease retainer seal, and the snap ring onto the inboard wheel half.		

ACFT TYPE		ANNUAL INSPECTION REQUIREMENTS	MECH	INSP
ALL	296	Gear Leg Tube Inspection: With the wheel removed, clean the inside of the lower portion of the landing gear leg tube to remove any accumulated dirt, mud, grime and other foreign debris. Inspect the inside bore of the leg tube for corrosion, specifically around the bolt holes located at the bottom of the leg tube. If corrosion is found, continue as instructed below.		
TITLE:		Wear and Corrosion Protection		

		MECH	INSP
INSPECTION INSTRUCTIONS	Preventing and removing corrosion from the main landing gear components is essential for long life of the aircraft. The main landing gear wear and corrosion control efforts are focused on the two (2) steel leg tubes, the two (2) steel cross tubes, the two (2) steel axles, the two (2) aluminum trunnions, and the two (2) aluminum axle attach fittings.		

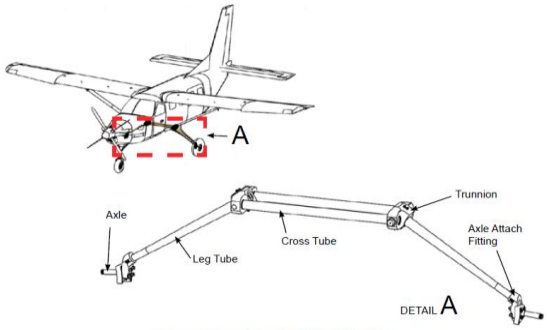

Figure 32-16 — Main Landing Gear Assembly

	MECH	INSP
NOTE: Unless otherwise specified in this section, ensure that all repaired surfaces are blended to a 25:1 ratio, with a minimum 63 RMS max surface finish, and that no more than .003" of material has been removed from the factory finish.		
A. Leg Tube Exterior Corrosion Control		
1. Initially dress the surface corrosion with 320-grit carbide sandpaper.		
2. Complete dressing the area using 400-grit carbide sandpaper.		
3. Clean the dressed area with a lint free cloth and acetone or methyl ethyl ketone.		
4. Allow the area to fully dry.		
5. Remove any remaining residue with a tack cloth or equivalent.		
6. Place a straight edge on the leg tube across the dressed area. The ends of the straight edge must rest on original factory finished surface and bridge the dressed area. Measure the depth of material removed.		
7. Apply a zinc chromate epoxy, or equivalent primer, to the area(s) where corrosion was removed (per AC43.13-1B, section 6-40). Follow all manufacturers' safety and cure time instructions.		
B. Leg Tube Interior Corrosion Control		
Any time the main landing gear trunnion securing bolts or main landing gear axle fitting, securing bolts are removed, they must be wet-installed using Pro-Seal 890 class B or any sealant meeting the requirements of AMS-S-8802 (any type and class is acceptable).		
If corrosion is discovered:		
1. Remove corrosion using a flap sanding wheel, silicone carbide sandpaper, or hone.		
2. Using a lint free cloth and acetone or methyl ethyl ketone, clean the dressed area(s).		
3. Allow the part to fully air dry.		
4. Remove any remaining residue with a tack cloth or equivalent.		
5. Apply a zinc chromate epoxy, or equivalent primer, to the area(s) where corrosion was removed (per AC43.13-1B, section 6-40). Follow all manufacturers' safety and cure time instructions.		
C. Cross Tube Corrosion Control		
1. If corrosion is discovered on the exterior of the cross tubes, remove the corrosion in accordance with appropriate Kodiak Manual.		
2. If corrosion is discovered on the interior of the cross tubes, remove the corrosion in accordance with Leg Tube Interior Corrosion Control in this section.		

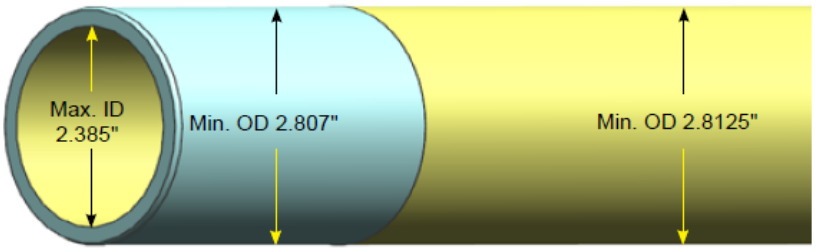

Figure 32-17 — Cross Tube, Machined End, Material Minimums

	MECH	INSP
D. Axle Corrosion Control		

	MECH	INSP
1. The main landing gear axle is subject to wear and corrosion due to the nature of normal operation of the airplane. Local grooves that continue to allow easy installation of the wheel are acceptable. If grooves form on the smooth axle surface not allowing easy installation of the wheel:		
a. Initially dress the surface corrosion with 320-grit carbide sandpaper.		
b. Complete dressing the area using 400-grit carbide sandpaper.		
c. Clean the dressed area with a lint free cloth and acetone or methyl ethyl ketone.		
d. Allow the area to fully dry.		
e. Remove any remaining residue with a tack cloth or equivalent.		
f. Place a straight edge on the leg tube across the dressed area. The ends of the straight edge must rest on original factory finished surface and bridge the dressed area. Measure the depth of material removed.		
g. If the minimum outside diameter of the axle is acceptable, apply liberal amounts of grease to all unprotected surfaces.		
2. If corrosion is detected on the interior wall of the axle:		
a. Remove corrosion using a flap sanding wheel, silicone carbide sandpaper, or hone.		
b. Using a lint free cloth and acetone or methyl ethyl ketone, clean the dressed area(s).		
c. Allow the part to fully air dry.		
d. Remove any remaining residue with a tack cloth or equivalent.		
e. Apply a zinc chromate epoxy, or equivalent primer, to the area(s) where corrosion was removed (per AC43.13-1B, section 6-40). Follow all manufacturers' safety and cure time instructions.		

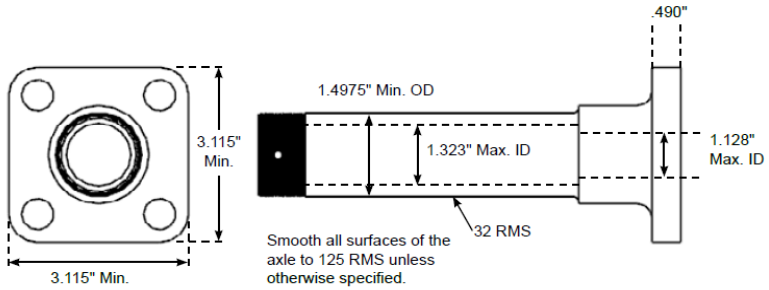

Figure 32-18 — Main Landing Gear Axle

	MECH	INSP
E. Trunnion Corrosion Control		
1. Damage caused by scratches or excessive surface wear will lead to corrosion of the aluminum parts. If corrosion is found on the trunnion:		
a. Feather sand the edges of the finish around the damaged area with 320-grit sandpaper.		
NOTE: Blend the dressed area with the surrounding material at a minimum rate of 20:1.		
b. Clean the sanded area with acetone, methyl ethyl ketone, or an approved solvent.		
c. Let all cleaning agents dry completely.		
d. Apply Alodine to the damaged area and let the Alodine dry for at least 30 minutes.		
e. Prime the dressed surface with an epoxy primer.		

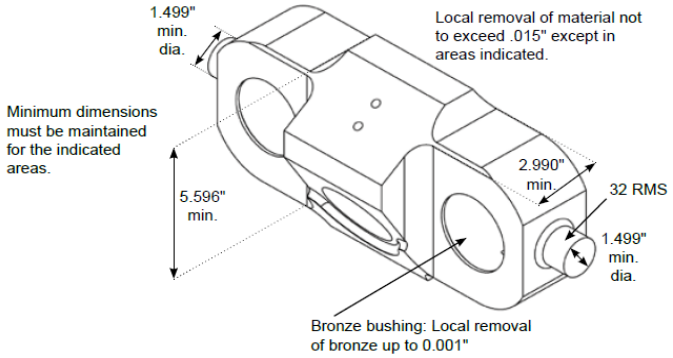

Figure 32-19 — Main Landing Gear Trunnion Material Minimums

	MECH	INSP
2. Damage to the bronze bushing can be repaired by:		
a. Lightly feather sand the damaged area with 320-grit sandpaper to remove no more than 0.001" of material.		
b. Clean the area completely of any sanding residue.		
NOTE: No further surface preparation is necessary for repairs to the bronze bushing.		
F. Axle Attach Fitting Corrosion Control		
1. The axle attach fitting is subject to potential damage due to landing on unimproved runways as a normal part of operation of the KODIAK® 100. Surface damage must be repaired as soon as practical to prevent further corrosion related damage. Repair surface damage in accordance with Trunnion Corrosion Control in this section.		
2. Repeated corrosion control over time could remove enough material to make replacement of the axle attach fitting necessary. Replacement of the axle fitting requires the entire gear leg to be replaced. Inspect the axle attach fitting to ensure the minimum dimensions described in Figure 32-20 are maintained. All other areas not defined, may not exceed any local material removal for corrosion control, greater than .010".		

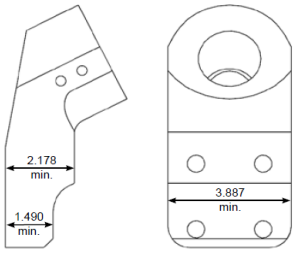

Figure 32-20 — Main Landing Gear Axle Attach Fitting, Material Minimums

ACFT TYPE		ANNUAL INSPECTION REQUIREMENTS	MECH	INSP
ALL	297	Nose Gear Steering Linkage: Inspect for proper condition, security of installation, cracks, travel, and freedom of movement.		
ALL	298	Nose Gear Steering Linkage Bolts: Inspect for proper condition and security of installation.		
ALL	299	Nose Gear Steering Bellcrank: Inspect for proper condition and security of installation.		
ALL	300	Nose Gear Steering Rod End Mechanism: Inspect for proper condition and security of installation.		
ALL	301	Nose Gear Steering Stop Mechanism: Inspect for cracks, proper installation, security, and condition. Verify steering limits have not been exceeded.		
ALL	302	Steering Bungee: Check for the security of threaded rod end into the bungee housing. Check for the security of the band clamp securing the steering bungee and the bungee adjuster. Lubricate the rod end with LPS 1.		
ALL	303	Shimmy Damper: Inspect for proper condition, security, and signs of leakage (if applicable). Lubricate the shimmy damper pivot points with LPS 1.		

DOI - KODIAK 100 SERIES - ANNUAL INSPECTION

ACFT TYPE		ANNUAL INSPECTION REQUIREMENTS	MECH	INSP
ALL	304	Perform a transient voltage suppressor inspection (if GFC 700 equipped) as instructed below.		
TITLE:		Transient Voltage Suppressor Inspection		

	Name/Description	Part Number/Spec.	Manufacturer	Application
Tools	Megger Meter or Fluke 1507 Insulation Tester	N/A	Available Commercially	To check insulation resistance.

		MECH	INSP
INSPECTION INSTRUCTIONS	**WARNING:** Damage can occur to the GRS or GMU if insulation resistance voltage is applied to the GRS or GMU.		
	A. Place the master switch in the OFF position.		
	B. Disconnect the following connectors from the associated equipment.		
	1. 1P771 from GRS77 #1		
	2. 2P771 from GRS77 #2		
	3. P501 from RH wing root		
	4. P601 from LH wing root		
	5. 1P441 from GMU44 #1		
	6. 2P441 from GMU44 #2		
	C. Conduct insulation resistance tests.		
	1. Configure the insulation tester for a 50 volt test and measure the insulation resistance between the following pins. Measured insulation resistance must be greater than 40 Meg Ohms.		
	a. GRS77 #1, connector 1P771 pins 9 and 40		
	b. GRS77 #2, connector 2P771 pins 9 and 40		
	c. GMU44 #1, connector 1P441 pins 9 and 6		
	d. GMU44 #2, connector 2P441 pins 9 and 6		
	2. Configure the insulation tester for a 100 volt test and measure the insulation resistance between the following pins. Measured insulation resistance must be less than 0.200 Meg Ohms.		
	a. GRS77 #1, connector 1P771 pins 9 and 40		
	b. GRS77 #2, connector 2P771 pins 9 and 40		
	c. GMU44 #1, connector 1P441 pins 9 and 6		
	d. GMU44 #2, connector 2P441 pins 9 and 6		
	D. Replace any TVS units that fail either resistance test in accordance with appropriate Kodiak Manual.		
	E. After all TVS devices satisfy the inspection requirements, reconnect the following connectors to the associated equipment.		
	1. 1P771 to GRS77 #1		
	2. 2P771 to GRS77 #2		
	3. P501 to RH wing root		
	4. P601 to LH wing root		

	MECH	INSP
5. 1P441 to GMU44 #1		
6. 2P441 to GMU44 #2		

ACFT TYPE		ANNUAL INSPECTION REQUIREMENTS	MECH	INSP
ALL	305	Perform a lightening protection resistor inspection (if GFC 700 equipped) as instructed below.		
TITLE:		Lightening Protection Resistor Inspection		

		MECH	INSP
INSPECTION INSTRUCTIONS	A. Place the Master switch in the OFF position		
	B. Disconnect the following connectors from the associated equipment		
	1. 1P771 from GRS 77 #1		
	2. P601 from J601		
	3. 2P771 from GRS 77 #2		
	4. P501 from J501		
	5. 1P603 from GIA #1		
	6. 2P603 from GIA #2		
	7. 4P801 from Pitch Trim Servo		
	8. 2P801 from Roll Servo		
	9. 1P441 from GMU #1		
	10. 2P441 from GMU #2		
	C. Conduct resistance tests.		
	NOTE: Subtract out the resistance of the test leads.		
	1. Measure resistance between GRS #1 connector 1P771 pin 10 and connector P601 pin M. Resistance should be between 2.2 ohms and 3.4 ohms.		
	2. Measure resistance between GRS #2 connector 2P771 pin 10 and P501 pin D (SN 100-0120 and up) or pin 4 (SN 100-0001 - SN 100-0119). Resistance should be between 2.2 ohms and 3.4 ohms.		
	3. Measure resistance between connector 1P603 pin 4 and connector P601 pin U. Resistance should be between 3.2 ohms and 4.5 ohms.		
	4. Measure resistance between connector 1P603 pin 6 and connector P601 pin Y. Resistance should be between 3.2 ohms and 4.5 ohms.		
	5. Measure resistance between connector 2P603 pin 4 and connector P601 pin GG. Resistance should be between 3.2 ohms and 4.5 ohms.		
	6. Measure resistance between connector 2P603 pin 6 and connector P601 pin HH. Resistance should be between 3.2 ohms and 4.5 ohms.		
	7. Measure resistance between connector 4P801 pin J and connector P601 pin U. Resistance should be between 3.4 ohms and 4.7 ohms.		
	8. Measure resistance between connector 4P801 pin T and connector P601 pin Y. Resistance should be between 3.4 ohms and 4.7 ohms.		
	9. Measure resistance between connector 4P801 pin S and connector P601 pin GG. Resistance should be between 3.4 ohms and 4.7 ohms.		
	10. Measure resistance between connector 4P801 pin E and connector P601 pin HH. Resistance should be between 3.4 ohms and 4.7 ohms.		
	11. Measure resistance between connector 2P801 pin J and connector J601 pin U. Resistance should be between 3.1 W and 4.4 W.		
	12. Measure resistance between connector 2P801 pin T and connector J601 pin Y. Resistance should be between 3.1 ohms and 4.4 ohms.		

	MECH	INSP
13. Measure resistance between connector 2P801 pin S and connector J601 pin GG. Resistance should be between 3.1 ohms and 4.4 ohms.		
14. Measure resistance between connector 2P801 pin E and connector J601 pin HH. Resistance should be between 3.1 ohms and 4.4 ohms.		
15. Measure resistance between connector 1P441 pin 4 and connector J601 pin L. Resistance should be between 2.2 ohms and 3.4 ohms.		
16. Measure resistance between connector 1P441 pin 2 and connector J601 pin S. Resistance should be between 2.2 ohms and 3.4 ohms.		
17. Measure resistance between connector 1P441 pin 8 and connector J601 pin M. Resistance should be between 2.2 ohms and 3.4 ohms.		
18. Measure resistance between connector 2P441 pin 4 and connector J501 pin L. Resistance should be between 2.2 ohms and 3.4 ohms.		
19. Measure resistance between connector 2P441 pin 2 and connector J501 pin S. Resistance should be between 2.2 ohms and 3.4 ohms.		
20. Measure resistance between connector 2P441 pin 8 and connector J501 pin D (SN 100-0120 and up) or pin 4 (SN 100-0001 - SN 100-0119). Resistance should be between 2.2 ohms and 3.4 ohms.		

ACFT TYPE		ANNUAL INSPECTION REQUIREMENTS	MECH	INSP
ALL	306	Each person performing this inspection shall inspect (where applicable) each installed miscellaneous item that is not otherwise covered by this listing for improper installation and improper operation.		
ALL	307	Inspect each installed miscellaneous item that is not otherwise covered by this listing for improper installation and improper operation.		

ACFT TYPE		SUPPLEMENTAL ANNUAL INSPECTION REQUIREMENTS TKS ICE PROTECTION SYSTEM INSPECTION	MECH	INSP
ALL	308	Porous Panels and Windshield Nozzles- Inspect for proper condition and security.		
ALL	309	Porous Panels and Windshield Nozzles- Operate system to check for even flow from all panels. Inspect for leaks from sealed areas.		
ALL	310	Propeller Slinger - Inspect for proper condition and security of installation. Check fluid lines for leaks with the system operating. Check for proper routing/aim of nozzles. Ensure the fluid is discharging into ring from nozzle fitted at front of engine.		
ALL	311	Propeller Nozzle (Aircraft to Propeller Slinger) - Inspect that nozzle is positioned to direct a stream of fluid into propeller slinger with system operating on HIGH.		
ALL	312	Ice Protection System Metering Pumps - Inspect pumps and electrical connections for proper condition and security of installation. Inspect for leaks with the pumps running. Check fluid line connections for leaks.		
ALL	313	Windshield Pump and Spray Nozzles - Inspect for proper condition and security of installation. Inspect pump and electrical connections. Check nozzles for proper orientation and even fluid flow. Inspect lines for leaks with the pump running.		
ALL	314	Ice Inspection Lights - Inspect lights and electrical connections for proper operation and security of installation. Ensure that the orientation of the ice lights provide adequate illumination of the wings' leading edges.		
ALL	315	Stall Warning Lift Transducer Heat Check - Verify that the lift transducer vane and mounting plate are hot when the left pitot heat switch is turned on.		
ALL	316	Fluid Lines - Inspect for proper routing. Inspect for proper condition and security of installation. Inspect for evidence of chafing, kinking or leaks. Ensure adequate clearance in areas of control cables.		
ALL	317	Propeller Feed Tubes - Inspect for proper condition and security of installation.		
ALL	318	Propeller Anti-icing Boots - Inspect for proper condition and security of installation. Inspect for adhesion to propeller blades.		
ALL	319	Fluid Level Sender - Inspect for proper operation.		
ALL	320	Fluid Quantity Indication Test - Perform a fluid quantity calibration/test as instructed below.		
ALL	321	Filler Cap and Vent hole - Inspect for proper condition and operation, clean.		
ALL	322	Filters (Inspect) - Inspect filters for proper condition and security of installation. Check fluid line connections for leaks.		

ACFT TYPE		SUPPLEMENTAL ANNUAL INSPECTION REQUIREMENTS TKS ICE PROTECTION SYSTEM INSPECTION CONTINUED	MECH	INSP
ALL	323	System Fluid Couplings - Inspect for evidence of leaks.		
ALL	324	Tank - Inspect for proper condition and security of installation. Inspect tank for leaks.		
ALL	325	Proportioning Units - Inspect for proper condition and security of installation. Check fluid line connections for leaks.		
ALL	326	Electrical Wire Harnesses - Inspect for proper routing, condition and security of installation. Inspect for evidence of chafing, arching, or interference with other components/assembly of airframe.		
ALL	327	Horizontal Tail Pressure Sensors - Inspect for proper condition and security of installation. Check fluid line connections for leaks.		
ALL	328	Vertical Tail Pressure Sensor - Inspect for proper condition and security of installation. Check fluid line connections for leaks.		
ALL	329	Supply Lines - Inspect lines to the wings, main landing gear fairings, wing struts, vertical and horizontal for connection, security of installation, and leaks.		

ACFT TYPE		SUPPLEMENTAL ANNUAL INSPECTION REQUIREMENTS EXTERNAL CARGO COMPARTMENT INSPECTIONS	MECH	INSP
ALL	330	External Cargo Compartment - Inspect security of installation, and condition of structure, including bulkheads and their attachments.		
ALL	331	EPA and Oil Drain Sump Cans: (If Equipped) Inspect can for leakage, condition, and security of installation. Completely drain can.		
ALL	332	External Cargo Compartment EPA Can Drain Lines - Inspect the EPA Can drain lines for condition, security and obstructions.		
ALL	333	External Cargo Compartment FOD Ducting - Inspect for damage, wear, and security of installation.		
ALL	334	External Cargo Compartment Blankets - Inspect for damage, wear and security of installation.		
ALL	335	External Cargo Compartment EPA Can/Ejector Assembly: (If Equipped) Inspect assembly for leakage, condition, and security of installation. Completely drain can. Ensure that the alternate vent at the top of the ejector assembly is clean and free from debris.		
ALL	336	External Cargo Compartment Placards - Check placard legibility.		
ALL	337	External Cargo Compartment Fuel Drain Lines - Check drain lines and valves for evidence of leakage and proper operation.		
ALL	338	External Cargo Compartment Doors - Inspect the structure of the doors for condition, and damaged laminate. Check door seal for condition and proper installation.		
ALL	339	External Cargo Compartment Door Hinges and Latches - Inspect for damage, wear, security of installation and condition of fasteners. Lubricate the external cargo compartment door hinges with LPS 2.		
ALL	340	Strakes - Inspect for damage, wear and security of installation.		
ALL	341	Ventral Fins - Inspect for damage, wear and security of installation.		

ACFT TYPE		SUPPLEMENTAL ANNUAL INSPECTION REQUIREMENTS VAPOR CYCLE SYSTEM ANNUAL INSPECTION	MECH	INSP
ALL	342	Vapor Cycle System - Inspect evaporators and condenser air inlets and exhausts for obstructions or debris. Inspect system for evidence of damage, leaks and security of installation.		
ALL	343	Compressor - Inspect for security of installation, visible wear/cracking in both the compressor body and mounting hardware.		
ALL	344	Vapor Cycle System Compressor Belt - Inspect for wear, tension and alignment.		

ACFT TYPE		SUPPLEMENTAL ANNUAL INSPECTION REQUIREMENTS JUMP PACKAGE ANNUAL INSPECTION	MECH	INSP
ALL	345	Jump Signal: Check for proper operation of signal lights. Inspect wiring for proper routing and condition.		
ALL	346	Jump Video System: Check for proper operation of video camera and monitor in accordance with the POH/AFM. Inspect wiring for proper routing and condition.		
ALL	347	Jump Door: Clean door and tracks. Lubricate tracks with silicone spray lubricant. Inspect door for cracks or loose fasteners. Check door for proper operation.		

ACFT TYPE		SUPPLEMENTAL ANNUAL INSPECTION REQUIREMENTS JUMP PACKAGE ANNUAL INSPECTION CONTINUED	MECH	INSP
ALL	348	Jump Step: Inspect for security of installation and proper condition.		
ALL	349	Exterior Hold: Inspect for security of installation and proper condition.		
ALL	350	Interior Grab Bar: Inspect for security of installation and proper condition.		
ALL	351	Static Line Attach Mechanism: Inspect for security of installation and proper condition.		
ALL	352	Wind Deflector: Inspect for security of installation and proper condition.		
ALL	353	Rear View Mirror: Inspect for security of installation and proper condition.		

ACFT TYPE		SUPPLEMENTAL ANNUAL INSPECTION REQUIREMENTS KYDEX INTERIOR ANNUAL INSPECTION	MECH	INSP
ALL	354	Cockpit Interior Lights: Inspect for security of installation and proper condition.		
ALL	355	Passenger Interior Lights: Inspect for security of installation and proper condition.		
ALL	356	Curtain Track: Inspect for security of installation and proper condition.		
ALL	357	Crew Interior Panels: Inspect for security of installation and proper condition.		
ALL	358	Passenger Interior Panels: Inspect for security of installation and proper condition.		
ALL	359	Aft Cabin Interior Panel: Inspect for security of installation and proper condition.		
ALL	360	Cargo Door Pull Strap: Inspect for security of installation and proper condition.		
ALL	361	Air Distribution Ducting and Overhead Air Vents: Inspect for security of installation and proper condition.		
ALL	362	Installation Brackets and Structural Attachments: Inspect for security of installation and proper condition.		

ACFT TYPE		SUPPLEMENTAL ANNUAL INSPECTION REQUIREMENTS COMPOSITE INTERIOR ANNUAL INSPECTION	MECH	INSP
ALL	363	Cockpit Interior Lights: Inspect for security of installation and proper condition.		
ALL	364	Passenger Interior Lights: Inspect for security of installation and proper condition.		
ALL	365	Curtain Track: Inspect for security of installation and proper condition.		
ALL	366	Crew Interior Panels: Inspect for security of installation and proper condition. Ensure that the access panel in the aft bulkhead remains attached to the lanyard, and that the magnets remain in place to secure the panel when closed.		
ALL	367	Cockpit Interior Storage Pockets: Inspect for security of installation and proper condition.		
ALL	368	Cockpit Cup Holders: Inspect for security of installation and proper condition.		
ALL	369	Passenger Interior Panels: Inspect for security of installation and proper condition.		
ALL	370	Aft Cabin Interior Panel: Inspect for security of installation and proper condition. Ensure that the access panel in the aft bulkhead remains attached to the lanyard, and that the magnets remain in place to secure the panel when closed.		
ALL	371	Cargo Door Pull Strap: Inspect for security of installation and proper condition. Ensure the retention magnet remains adhered to the cargo door interior panel.		
ALL	372	Passenger Interior Storage Pockets (If Equipped): Inspect for security of installation and proper condition.		
ALL	373	Passenger Cup Holders: Inspect for security of installation and proper condition.		

ACFT TYPE		SUPPLEMENTAL ANNUAL INSPECTION REQUIREMENTS COMPOSITE INTERIOR ANNUAL INSPECTION CONTINUED	MECH	INSP
ALL	374	Air Distribution Ducting and Overhead Air Vents: Inspect for security of installation and proper condition.		
ALL	375	Installation Brackets and Structural Attachments: Inspect for security of installation and proper condition.		

ACFT TYPE		ANNUAL INSPECTION REQUIREMENTS	MECH	INSP
ALL	376	Compressor Wash: Inspect wash ring for condition and security of installation. Perform a compressor wash.		
TITLE:		Turbine Blade Wash Procedures		

		MECH	INSP
INSPECTION INSTRUCTIONS	**NOTE:** Adhere to the following starter limitations for motoring the engine.		

Starter Options	Time ON	Time OFF
Lo/Motor	30 seconds	60 seconds
Lo/Motor	30 seconds	60 seconds
Lo/Motor	30 seconds	30 minutes

	MECH	INSP
NOTE: A minimum cool-down period of 40 minutes is recommended after engine running before injecting rinse fluid.		
NOTE: Compressor turbine blade washing is to be accomplished using potable water only at an ambient temperature of above 36°F. A potable water/methanol solution may be used with ambient temperatures below 36°F. See the P&W Maintenance Manual for appropriate solution strengths with varying ambient temperatures.		
1. Remove upper and lower forward cowlings.		
2. Place a suitable pan beneath the engine to recover wash solution.		
3. Remove one of the two igniter plugs.		
4. Install spray tube P/N PWC32271 in the igniter plug boss and tighten spray tube finger tight. Make sure the arrow on the tab of the spray tube is directed toward the propeller reduction gearbox and is parallel with the engine centerline.		
CAUTION: The cleaning solution supply hose should be supported in order to prevent damage to the spray tube.		
5. Connect a hose from a suitable cleaning rig to the spray adapter. The water/solution mixture should be delivered to the engine at 40 psi.		
6. Verify the engine ignition switch and engine bleed air is in the OFF position.		
7. Begin motoring the engine with the starter for 30 seconds; when the NG reaches 5%, introduce the wash solution to the engine.		
NOTE: Approximately ½ gallon of rinse solution will be consumed through the compressor turbine during a 30-second cycle.		
CAUTION: When using a water/methanol solution, perform an additional 30 seconds of dry motoring after each washing cycle to purge the engine of the volatile methanol fumes. Make sure recommended starter cooling periods of 40 minutes is observed.		
8. Repeat the washing cycle as required to remove contaminants from the turbine blades.		
9. Remove the spray tube assembly and reinstall the igniter plug.		
10. Perform two consecutive dry motoring runs while making sure the starter motoring limitations are not exceeded.		
11. Reinstall all engine cowlings.		

DOI - KODIAK 100 SERIES - ANNUAL INSPECTIONS

ZONE	ACFT TYPE		SUPPLEMENTAL ANNUAL INSPECTION REQUIREMENTS	MECH	INSP
ARCTIC	ALL	377	Floats - Inspect as required by OEM ICAs.		
ARCTIC	ALL	378	Skis - Inspect as required by OEM ICAs.		
ARCTIC	ALL	379	De-ice/Anti-ice System - Inspect as required by OEM ICAs.		
ARCTIC		380			
ARCTIC		381			
ARCTIC		382			
ARCTIC		383			
ARCTIC		384			
ARCTIC		385			
ARCTIC		386			
ARCTIC		387			
ARCTIC		388			
ARCTIC		389			
ARCTIC		390			
TEMPERATE	ALL	391	Floats - Inspect as required by OEM ICAs.		
TEMPERATE	ALL	392	Skis - Inspect as required by OEM ICAs.		
TEMPERATE	ALL	393	De-ice/Anti-ice System - Inspect as required by OEM ICAs.		
TEMPERATE		394			
TEMPERATE		395			
TEMPERATE		396			
TEMPERATE		397			
TEMPERATE		398			
TEMPERATE		399			
TEMPERATE		400			
TEMPERATE		401			
TEMPERATE		402			
TEMPERATE		403			
TEMPERATE		404			
TEMPERATE		405			
	ALL	406	All panels opened for the inspection are closed and secure.		
	ALL	407	Run aircraft engine and leak check.		

DOI - KODIAK 100 SERIES - ANNUAL INSPECTIONS

NOTES:

ASSURE PROPER MAINTENANCE RECORD ENTRIES HAVE BEEN MADE IAW 14 CFR 43.9

THE AIRCRAFT RECORDS CONSIST OF THE FOLLOWING;

1. AIRCRAFT, ENGINE & PROPELLER HARD LOGS.
2. ALL FORM 337'S, MAJOR REPAIR & ALTERATION.
3. COMPLIANCE LIST OF ALL PERTINENT AIRWORTHINESS DIRECTIVES.
4. MAINTENANCE SCHEDULE- LIST OF REQUIRED SPECIAL INSPECTIONS, COMPONENT OVERHAUL & TIME-LIFE LIMITS.
5. CURRENT & HISTORICAL WEIGHT & BALANCE STATUS & EQUIPMENT LIST
7. MINIMUM EQUIPMENT LIST AS REQUIRED.
8. SPECIAL FLIGHT AUTHORIZATIONS AND/OR SUPPLEMENTS