UNITED STATES
DEPARTMENT OF THE INTERIOR

CESSNA 206 SERIES

VOL 1 OF 2 - SCHEDULED MAINTENANCE CHECKS

VOL 2 OF 2 - SCHEDULED STRUCTURAL CHECKS

Includes Cessna 206 Models: 206
U206,A,B,C,D,E,F,G
TU206A,B,C,D,E
P206,A,B,C,D,E
TP206A,B,C,D
206H
T206H

NOTE: THE INSPECTION WORK SHEETS / PACKAGES IN THIS DOCUMENT ARE FOR THE 'UNITED STATES DEPARTMENT OF THE INTERIOR' AIRCRAFT ONLY.

UNITED STATES

DEPARTMENT OF THE INTERIOR

CESSNA 206 SERIES

VOL 1 OF 2
SCHEDULED MAINTENANCE CHECKS

VOL 2 OF 2
SCHEDULED STRUCTURAL CHECKS

UNITED STATES

DEPARTMENT OF THE INTERIOR

CESSNA 206 SERIES

VOL 1 OF 2
SCHEDULED MAINTENANCE CHECKS

VOL 2 OF 2
SCHEDULED STRUCTURAL CHECKS

UNITED STATES

DEPARTMENT OF THE INTERIOR

CESSNA 206 SERIES

VOL 1 OF 2
SCHEDULED MAINTENANCE CHECKS

VOL 2 OF 2
SCHEDULED STRUCTURAL CHECKS

UNITED STATES
DEPARTMENT OF THE INTERIOR

CESSNA 206 SERIES

5-00-00

SCHEDULED MAINTENANCE CHECKS

VOL 1 OF 2

Includes Cessna 206 Models: 206
U206,A,B,C,D,E,F,G
TU206A,B,C,D,E
P206,A,B,C,D,E
TP206A,B,C,D
206H
T206H

NOTE: THE INSPECTION WORK SHEETS / PACKAGES IN THIS DOCUMENT ARE FOR THE 'UNITED STATES DEPARTMENT OF THE INTERIOR' AIRCRAFT ONLY.

This Cessna 206 series inspection program document has been compiled to meet or exceed the requirements of the Department of the Interior - Departmental Manual (Aviation Policy) and Code of Federal Regulations, Title 14, Chapter 1, Subchapter C, Part 43 Appendix D. – 'Scope and detail of items (as applicable to the particular aircraft) to be included in Annual and 100 Hour Inspections'. FAR Part 43.15 (c) provides the authority for Dept. of the Interior as owner/operator to issue a checklist of its own design to comply with or exceed the contents of FAR Part 43 Appendix D. Dept. of the interior has incorporated and/or condensed all line items from the relevant Cessna 206 Series Maintenance Manuals to include inspections based on hours, annual, and multi-year based structural inspections. Compilation of this document was carried out by Turbo Air Inc. of 4000 S. Orchard St. Boise Idaho 83705 for the Department of the Interior (Office of Aviation Services) 300 E Mallard Drive. Ste 200 Boise, Idaho 83705. Under the guidance of Part 91.403, 405, 409, 415 and Part 43.15(a) (1) & (c) FAA approval is not required (or offered) for issue of this document. This is a controlled document and amendment status shall be updated on the record of revisions page.

Personnel carrying out maintenance on Dept. of the Interior aircraft and using this inspection program must ensure that by signing for the listed tasks, they have complied with the latest revision of CFR Part 43 Appendix D.

This is to certify that the contents of this inspection program have been condensed from the relevant Cessna 206 series Inspection programs and meets or exceeds the requirements of CFR Part 43 Appendix D at the time of writing.

General Manager, Turbo Air Inc. Date 10-Dec-15

Fleet Manager, U.S. Dept. of the Interior (Office of Aviation Services) Date 10-Dec-15

DOI - CESSNA 206 SERIES
RECORD OF REVISIONS

REVISION No.	PAGE NUMBER	ISSUE DATE	INSERTION DATE	INSERTED BY	REMOVAL DATE	REMOVED BY

DOI - CESSNA 206 SERIES
RECORD OF TEMPERARY REVISIONS

REVISION No.	PAGE NUMBER	ISSUE DATE	INSERTION DATE	INSERTED BY	REMOVAL DATE	REMOVED BY
DOITR-206-SMC-01	ALL	5/4/2016	5/4/2016	DOI	5/4/2016	DOI

UNITED STATES DEPARTMENT OF THE INTERIOR

CESSNA 206 SERIES
SCHEDULED MAINTENANCE
TEMPORARY REVISIONS

TEMPORARY REVISION DOITR-206-SMC-01

REASON FOR ISSUE: This Temporary Revision removed SID references and added IAW acronym and definition.

FILING INSTRUCTION:

Ensure that all previous revisions have been incorporated.

Remove and destroy

TITLE	PAGE NUMBER	REVIVSION	DATE
Schedule Maintenance Instructions	2	Rev. 00	5/4/2016
Schedule Maintenance 50 Hr.	1	Rev. 00	5/4/2016
Schedule Maintenance 100 Hr.	1 THRU 9	Rev. 00	5/4/2016
Schedule Maintenance 200 Hr.	1	Rev. 00	5/4/2016
Schedule Maintenance Annual	1 THRU 11	Rev. 00	5/4/2016
Schedule Maintenance 500 Hr.	1	Rev. 00	5/4/2016
Schedule Maintenance 1000 Hr.	1	Rev. 00	5/4/2016
Schedule Maintenance 2000 Hr.	1	Rev. 00	5/4/2016
Schedule Maintenance 2 Yr.	1	Rev. 00	5/4/2016
Schedule Maintenance 3 Yr.	1	Rev. 00	5/4/2016

Insert attached new

TITLE	PAGE NUMBER	REVIVSION	DATE
Schedule Maintenance Instructions	2	DOITR-206-SMC-01	5/4/2016
Schedule Maintenance 50 Hr.	1	DOITR-206-SMC-01	5/4/2016
Schedule Maintenance 100 Hr.	1 THRU 9	DOITR-206-SMC-01	5/4/2016
Schedule Maintenance 200 Hr.	1	DOITR-206-SMC-01	5/4/2016
Schedule Maintenance Annual	1 THRU 11	DOITR-206-SMC-01	5/4/2016
Schedule Maintenance 500 Hr.	1	DOITR-206-SMC-01	5/4/2016
Schedule Maintenance 1000 Hr.	1	DOITR-206-SMC-01	5/4/2016
Schedule Maintenance 2000 Hr.	1	DOITR-206-SMC-01	5/4/2016
Schedule Maintenance 2 Yr.	1	DOITR-206-SMC-01	5/4/2016
Schedule Maintenance 3 Yr.	1	DOITR-206-SMC-01	5/4/2016

UNITED STATES DEPARTMENT OF THE INTERIOR
CESSNA 206 SERIES

NOTE: Record the incorporation of this Temporary Revision on the RECORD OF TEMPORARY REVISIONS sheet at the front of the Manual.

This temporary revision/amendment complies with the USDOI Department of Interior Inspection Program requirements.

ISSUED BY: USDOI - Office of Aviation Services
Fleet Manager
300 E. Mallard Dr. Suite 200
Boise, Idaho 83706-3991

Signed: Brian Gu

Date: 6/27/2016

INSTRUCTIONS

DOI – CESSNA 206 SERIES – SCHEDULED MAINTENANCE CHECKS

THE INSPECTION WORK SHEETS / PACKAGES IN THIS DOCUMENT ARE FOR THE
'UNITED STATES DEPARTMENT OF THE INTERIOR' AIRCRAFT ONLY.

Explanation of Terms

Hourly Inspections

50 Hr. Inspection	Every 50 Hrs.		
100 Hr. Inspection	Every 100 Hrs.	Includes	50 Hr. Inspection
200 Hr. Inspection	Every 200 Hrs.		
Annual Inspection	Every 12 Months	Includes	50 Hr., 100 Hr., & 200 Hr. Inspections
500 Hr. Inspection	Every 500 Hrs.		
1000 Hr. Inspection	Every 1000 Hrs.		
2 Year Inspection	Every 2 Years		
3 Year Inspection	Every 3 Years		

Inspection Intervals

Hourly: All required inspections may be completed up to +10% percent of their due time (i.e.: A 50 hour inspection may be completed between 50 and 55 hours time in service). Flight beyond the due time must be approved by the administrator. Flight beyond the 10 % limit is not permitted for any reason.

All inspections shall be done at the next standard interval (i.e.: 50hrs) from when the previous inspection was due provided that inspection was completed within the +10% time due. The 50 hr. check is due at 50 hrs. and the next is due at 100hrs. All inspections will be handled as described above. The +10% is to be used primarily for ferry flights to where maintenance can be performed.

Calendar: All required inspections may be completed up to their calendar due time. Flight beyond the calendar time is not permitted for any reason.

Note: Selected items that are normally controlled separately (on computer) (i.e.: overhauls, component function checks, etc.) have been omitted from this inspection work package and must be controlled separately. See computerized maintenance program for “Controlled Items”.

Note: This inspection package must be updated as new revisions to the maintenance program are issued.

Inspections: To be completed in accordance with this manual.

Repairs: To be completed in accordance with the appropriate Cessna Maintenance Manual.

Climate Zone Supplemental Inspections and Servicing

Before commencing inspection and servicing, it must be confirmed which climate zone the subject aircraft is operated in. If the aircraft is above the 49th parallel it is in the Arctic Zone. If the aircraft is below the 49th parallel it is in the Temperate zone. The extra line items listed for the appropriate climate zone shall be added to the servicing, the not applicable climate zone line items shall be noted as N/A in the sign-off block.

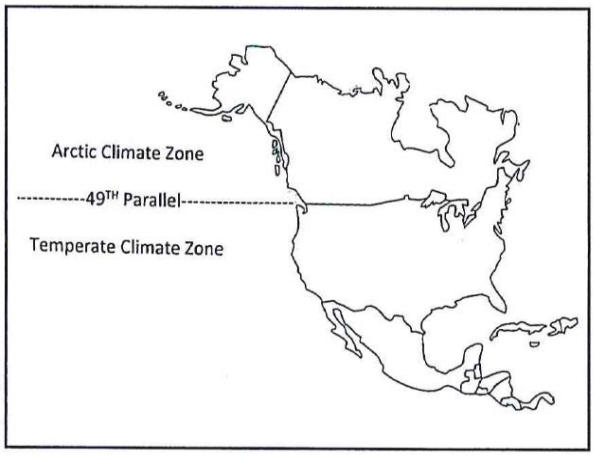

Dept. of the Interior Climate Zone Map

Acronyms in use

IAW -	In Accordance With	STC -	Supplemental Type Certificate
CPCP -	Corrosion Prevention and Control Program	PSE -	Principle Structural Element
NDI -	Non Destructive Inspection	N/A -	Not Applicable (see MECH Block D on next page)
ICA -	Instructions for Continued Airworthiness	OEM -	Original Equipment Manufacturer

Inspection Sheet - Block Explanation

Example

ACFT TYPE		EXAMPLE INSPECTION REQUIREMENTS	MECH	INSP
ALL	1	Engine - Inspect for evidence of oil and fuel leaks. Wash engine/engine compartment if needed.		
H	2	Idle and Mixture Adjustment - Check idle speed and idle mixture (lean rise). Adjust if necessary.		
A,B,C,D,E,F	3	Turbocharger pressurized vent lines to fuel pump, discharge nozzles and fuel flow gage.	N/A	
A	**B**	**C**	**D**	**E**

Block A All - All Cessna aircraft in the 206 Series (all models).

Other than 'All' designated with the specific 206 model.

Block B Each inspection and task is given a line item number in the 2nd column.

Block C Describes inspection tasks.

Block D Mechanic sign-off block. N/A (Not Applicable) - should be used if the inspection cannot or should not be carried out due to (but not limited to) - 1. Serial number range. 2. Unit or option not installed on aircraft. 3. Previously complied with. 4. Climate zone applicability. A note beside the N/A to indicate the reason for it is recommended.

Block E The (white) INSP block should be initialed by an inspector who witnessed the task carried out by the mechanic and completed a final inspection and/or functional check in accordance with the line item requirements and relevant technical publications. The inspector shall not initial the INSP block until after the mechanic has initialed the MECH block. In a block that requires a Maintenance Inspector, he shall initial the white INSP block whenever N/A has been entered in the MECH block.

INSPECTION MANUAL ORIGINAL

UNITED STATES DEPARTMENT OF THE INTERIOR

CESSNA 206 SERIES

50 HOUR SCHEDULED MAINTENANCE CHECKS

THE INSPECTION WORK SHEETS / PACKAGES IN THIS DOCUMENT ARE FOR THE 'UNITED STATES DEPARTMENT OF THE INTERIOR' AIRCRAFT ONLY.

Inspection Sheet - Block Explanation

Example

ACFT TYPE		EXAMPLE INSPECTION REQUIREMENTS	MECH	INSP
ALL	1	Engine - Inspect for evidence of oil and fuel leaks. Wash engine/engine compartment if needed.		
H	2	Idle and Mixture Adjustment - Check idle speed and idle mixture (lean rise). Adjust if necessary.		
A,B,C,D,E,F	3	Turbocharger pressurized vent lines to fuel pump, discharge nozzles and fuel flow gage.	N/A	
A	**B**	**C**	**D**	**E**

Block A All - All Cessna aircraft in the 206 Series (all models).

Other than 'All' designated with the specific 206 model.

Block B Each inspection and task is given a line item number in the 2nd column.

Block C Describes inspection tasks.

Block D Mechanic sign-off block. N/A (Not Applicable) - should be used if the inspection cannot or should not be carried out due to (but not limited to) - 1. Serial number range. 2. Unit or option not installed on aircraft. 3. Previously complied with. 4. Climate zone applicability. A note beside the N/A to indicate the reason for it is recommended.

Block E

The (white) INSP block should be initialed by an inspector who witnessed the task carried out by the mechanic and completed a final inspection and/or functional check in accordance with the line item requirements and relevant technical publications. The inspector shall not initial the INSP block until after the mechanic has initialed the MECH block. In a block that requires a Maintenance Inspector, he shall initial the white INSP block whenever N/A has been entered in the MECH block.

Climate Zone Supplemental Inspections and Servicing

Before commencing inspection and servicing, it must be confirmed which climate zone the subject aircraft is operated in. If the aircraft is above the 49th parallel it is in the Arctic Zone. If the aircraft is below the 49th parallel it is in the Temperate zone. The extra line items listed for the appropriate climate zone shall be added to the servicing, the not applicable climate zone line items shall be noted as N/A in the sign-off block.

Inspections: To be completed in accordance with this manual.

Repairs: To be completed in accordance with the appropriate Cessna Maintenance Manual.

Acronyms in use

IAW - In Accordance With

CPCP - Corrosion Prevention and Control Program

NDI - Non Destructive Inspection

ICA - Instructions for Continued Airworthiness

STC - Supplemental Type Certificate

PSE - Principle Structural Element

N/A - Not Applicable (see MECH Block D above)

OEM - Original Equipment Manufacturer

DOI - CESSNA 206 SERIES - 50 HOUR INSPECTION

'N' NUMBER:_____ MODEL: _____ AIRCRAFT S/N:_____

TACH HOURS:_____ AIRCRAFT TOTAL TIME:_____ ENG. SMOH:_____ PROP SMOH:_____

ACFT TYPE		50 HOUR INSPECTION REQUIREMENTS	MECH	INSP
ALL	1	Propeller Blades - Inspect for cracks, dents, nicks, scratches, errosion, corrosion, or other damage.		
ALL	2	Engine, Propeller Controls and Linkage - Check general condition, freedom of movement through full range. Check for proper travel, security of attachment, and for evidence of wear. Check friction locks for proper operation.		
A,B,C,D,E,F	3	Turbocharger pressurized vent lines to fuel pump, discharge nozzles and fuel flow gage.		
ALL	4	Turbocharger (if applicable) A. Inspect turbocharger mounting bracket, ducting, linkage and attaching parts for general condition, linkage or damage and security of attachment. B. Check waste gate, actuator, controller, oil and vent lines, overboost relief valve, and compressor housing for leakage, apparent damage, security of attachment and evidence of wear. Check waste gate return spring for condition and security.		
H	5	Do an inspection on the multi-segment V-Band coupling clamps. Refer to appropriate manual for instructions.		
ALL	6	Engine Cowling and Cowl Flaps - Inspect for cracks, dents, and other damage, security of cowl fasteners, and cowl mounted landing lights for attachment (if applicable). Check cowl flaps for condition, security, and operation. Check cowl flap controls for freedom of movement through full travel.		
ALL	7	Induction Air Filter - Remove, inspect and clean. Replace as required. Check induction system for leakage and security.		
G,H	8	Alternate Induction Air System - Check for obstructions, operation, and security.		
ALL	9	All Engine Compartment Hoses, Metal Lines, and Fittings - Inspect for signs of oil and fuel leaks. Check for abrasions, chafing, security, proper routing and support and for evidence of deterioration.		
A,B,C	10	Inspect exhaust system insulation blankets - Refer to appropriate manual for instructions.		
ALL	11	Exhaust System (Normally aspirated engine) - Inspect for cracks and security. Air leak check exhaust system. Refer to appropriate manual for instructions.		
ALL	12	Exhaust System (turbocharged engine) - Inspect couplings, seals, clamps, and expansion joints for cracks. Air leak check exhaust. Refer to appropriate manual for instructions.		
H	13	Exhaust System - Inspect for cracks and security. Special check in area of heat exchanger. Refer to appropriate manual for instructions.		
ALL	14	Engine Oil - Drain oil sump and oil cooler. Check for metal particles or foreign material in filter, on sump drain plug, and on engine suction screen. If applicable, refer to Textron Lycoming Service Bulletin #480C or latest revision. Replace filter, and refill with recommended grade aviation oil.		
ALL	15	Oil Cooler - Check for obstructions, leaks, and security of attachment.		
ALL	16	Battery, battery box and battery cables - Examine the general condition and security. Check electrolyte level. Clean battery compartment as necessary.		
ALL	17	Brakes and Tires - Check brake pads, disks and hydraulic lines. Check tire treads and proper inflation.		
G,H	18	Seat Tracks, Stops - Inspect seat tracks for condition and security of installation. Check seat track stops for damage and correct location. Inspect seat rails for cracks. Refer to appropriate manual for instructions.		
ALL	19	Shimmy Damper - Check fluid level and refill as required		
ALL	20	Nose Gear Shock Strut - Keep strut filled and inflated to correct pressure.		

DOI - CESSNA 206 SERIES - 50 HOUR INSPECTIONS

ZONE	ACFT TYPE		SUPPLEMENTAL 50 HOUR INSPECTION REQUIREMENTS	MECH	INSP
ARCTIC	ALL	21	Floats - Inspect as required by OEM ICAs.		
ARCTIC	ALL	22	Skis - Inspect as required by OEM ICAs.		
ARCTIC	ALL	23	De-ice/Anti-ice System - Inspect as required by OEM ICAs.		
ARCTIC		24			
ARCTIC		25			
ARCTIC		26			
ARCTIC		27			
ARCTIC		28			
ARCTIC		29			
ARCTIC		30			
ARCTIC		31			
ARCTIC		32			
ARCTIC		33			
TEMPERATE	ALL	34	Floats - Inspect as required by OEM ICAs.		
TEMPERATE	ALL	35	Skis - Inspect as required by OEM ICAs.		
TEMPERATE	ALL	36	De-ice/Anti-ice System - Inspect as required by OEM ICAs.		
TEMPERATE		37			
TEMPERATE		38			
TEMPERATE		39			
TEMPERATE		40			
TEMPERATE		41			
TEMPERATE		42			
TEMPERATE		43			
TEMPERATE		44			
TEMPERATE		45			
TEMPERATE		46			
TEMPERATE		47			
TEMPERATE		48			
	ALL	49	All panels opened for the inspection are closed and secure.		
	ALL	50	Run aircraft engine and leak check.		

DOI - CESSNA 206 SERIES - 50 HOUR INSPECTIONS

NOTES:

ASSURE PROPER MAINTENANCE RECORD ENTRIES HAVE BEEN MADE IAW 14 CFR 43.9

THE AIRCRAFT RECORDS CONSIST OF THE FOLLOWING;

1. AIRCRAFT, ENGINE & PROPELLER HARD LOGS.
2. ALL FORM 337'S, MAJOR REPAIR & ALTERATION.
3. COMPLIANCE LIST OF ALL PERTINENT AIRWORTHINESS DIRECTIVES.
4. MAINTENANCE SCHEDULE- LIST OF REQUIRED SPECIAL INSPECTIONS, COMPONENT OVERHAUL & TIME-LIFE LIMITS.
5. CURRENT & HISTORICAL WEIGHT & BALANCE STATUS & EQUIPMENT LIST
6. MINIMUM EQUIPMENT LIST AS REQUIRED.
7. SPECIAL FLIGHT AUTHORIZATIONS AND/OR SUPPLEMENTS

UNITED STATES DEPARTMENT OF THE INTERIOR

CESSNA 206 SERIES

100 HOUR SCHEDULED MAINTENANCE CHECKS

100 HOUR INCLUDES ALL 50 HOUR INSPECTIONS

THE INSPECTION WORK SHEETS / PACKAGES IN THIS DOCUMENT ARE FOR THE 'UNITED STATES DEPARTMENT OF THE INTERIOR' AIRCRAFT ONLY.

Inspection Sheet - Block Explanation

Example

ACFT TYPE		EXAMPLE INSPECTION REQUIREMENTS	MECH	INSP
ALL	1	Engine - Inspect for evidence of oil and fuel leaks. Wash engine/engine compartment if needed.		
H	2	Idle and Mixture Adjustment - Check idle speed and idle mixture (lean rise). Adjust if necessary.		
A,B,C,D,E,F	3	Turbocharger pressurized vent lines to fuel pump, discharge nozzles and fuel flow gage.	N/A	
A	**B**	**C**	**D**	**E**

Block A All - All Cessna aircraft in the 206 Series (all models).

Other than 'All' designated with the specific 206 model.

Block B Each inspection and task is given a line item number in the 2nd column.

Block C Describes inspection tasks.

Block D Mechanic sign-off block. N/A (Not Applicable) - should be used if the inspection cannot or should not be carried out due to (but not limited to) - 1. Serial number range. 2. Unit or option not installed on aircraft. 3. Previously complied with. 4. Climate zone applicability. A note beside the N/A to indicate the reason for it is recommended.

Block E The (white) INSP block should be initialed by an inspector who witnessed the task carried out by the mechanic and completed a final inspection and/or functional check in accordance with the line item requirements and relevant technical publications. The inspector shall not initial the INSP block until after the mechanic has initialed the MECH block. In a block that requires a Maintenance Inspector, he shall initial the white INSP block whenever N/A has been entered in the MECH block.

Climate Zone Supplemental Inspections and Servicing

Before commencing inspection and servicing, it must be confirmed which climate zone the subject aircraft is operated in. If the aircraft is above the 49th parallel it is in the Arctic Zone. If the aircraft is below the 49th parallel it is in the Temperate zone. The extra line items listed for the appropriate climate zone shall be added to the servicing, the not applicable climate zone line items shall be noted as N/A in the sign-off block.

Inspections: To be completed in accordance with this manual.

Repairs: To be completed in accordance with the appropriate Cessna Maintenance Manual.

Acronyms in use

IAW - In Accordance With

CPCP - Corrosion Prevention and Control Program

NDI - Non Destructive Inspection

ICA - Instructions for Continued Airworthiness

STC - Supplemental Type Certificate

PSE - Principle Structural Element

N/A - Not Applicable (see MECH Block D above)

OEM - Original Equipment Manufacturer

DOI - CESSNA 206 SERIES - 100 HOUR INSPECTION

'N' NUMBER:_____ MODEL: _____ AIRCRAFT S/N:_____

TACH HOURS:_____ AIRCRAFT TOTAL TIME:_____ ENG. SMOH:_____ PROP SMOH:_____

ACFT TYPE		100 HOUR INSPECTION REQUIREMENTS	MECH	INSP
ALL	1	Inspect aircraft records to verify that all applicable Cessna Service Information Letters, Cessna Service Bulletins and Supplier Service Bulletins are complied with.		
ALL	2	Inspect aircraft records to verify that all applicable Airworthiness Directives and Federal Aviation Regulations are complied with.		
ALL	3	Inspect aircraft records to verify that all logbook entries required by the Federal Aviation Regulations are complied with.		
ALL	4	Before inspection, remove all inspection plates, access doors, fairing, and cowling. Thoroughly clean the aircraft and aircraft engine.		
ALL	5	Spinner and Spinner Bulkhead - Remove spinner, wash, and inspect for cracks and fractures.		
H	6	Spinner - Complete a check of its general condition and that it is correctly attached. Make sure it has a minimum clearance of 0.14 inch (3.56 mm) to the propeller blades.		
ALL	7	Propeller Blades - Inspect for cracks, dents, nicks, scratches, errosion, corrosion, or other damage.		
ALL	8	Propeller lubrication - Refer to OEM Maintenance Manual.		
ALL	9	Propeller - Inspect hub, bolts and nuts for general condition and security of installation. Check safety wire for signs of looseness and retorque mounting bolts as required.		
ALL	10	Propeller Governor and Control - Inspect for oil and grease leaks. If leakage is evident, refer to OEM Service Manual.		
H	11	Propeller Governor and Control - Examine the security and operation of the controls. The maximum linear freeplay is 0.050 inch.		
G,H	12	Propeller Anti-ice Slip Rings, Brushes and Boots - Inspect for condition and security. Perform operational check.		
206,A,B,C,G	13	Engine, Propeller Controls and Linkage - Check general condition, freedom of movement through full range. Check for proper travel, security of attachment, and for evidence of wear. Check friction locks for proper operation.		
ALL	14	Engine - Inspect for evidence of oil, hydraulic and fuel leaks. Wash engine and check for security of accessories.		
D,E,F	15	Engine controls and linkage - Inspect for general condition and freedom of movement. These controls are not repairable, replace throttle, propeller, and mixture controls at each engine overhaul.		
H	16	Engine Controls and Linkage - Examine the general condition and freedom of movement through the full range. Complete a check for the proper travel, security of attachment, and for evidence of wear. Complete a check of the friction lock and vernier adjustment for proper operation. Complete a check that the throttle, fuel mixture, and propeller governor arms operate through their full arc of travel. The maximum linear freeplay is 0.050 inch.		
ALL	17	Engine Cylinders, Rocker Box Covers and Pushrod Housings - Check for fin damage, cracks, oil leakage, security of attachment and general condition.		
ALL	18	Ignition Harness and Insulators - Check for proper routing, deterioration, and condition of terminals.		
G,H	19	Ignition Switch and Electrical Harness - Inspect for damage, condition, and security.		
ALL	20	Cylinder Compression - Complete a differential compression test. If there is weak cylinder compression, refer to appropriate service manual.		
ALL	21	Spark Plugs - Remove, clean, analyze, test, gap, and rotate top plugs to bottom and bottom plugs to top.		
ALL	22	Oil Cooler - Check for obstructions, leaks, and security of attachment.		
ALL	23	Engine Oil - Drain oil sump and oil cooler. Check for metal particles or foreign material in filter, on sump drain plug, and on engine suction screen. If applicable, refer to Textron Lycoming Service Bulletin #480C or latest revision. Replace filter, and refill with recommended grade aviation oil.		
G,H	24	Induction Airbox, Valves, Doors, and Controls - Remove air filter and inspect hinges, doors, seals, and attaching parts for wear and security. Check operation. Clean and inspect air filter and re-oil if flock coated. Replace paper filters as required.		
G,H	25	Alternate Induction Air System - Check for obstructions, operation, and security.		

DOI - CESSNA 206 SERIES - 100 HOUR INSPECTIONS

ACFT TYPE		100 HOUR INSPECTION REQUIREMENTS	MECH	INSP
ALL	26	All Engine Compartment Hoses, Metal Lines, and Fittings - Inspect for signs of oil, hydraulic and fuel leaks. Check for abrasions, chafing, security, proper routing and support and for evidence of deterioration.		
ALL	27	Engine compartment cold and hot air hoses - Check for chaffing, holes, and proper clamping.		
ALL	28	Check all engine compartment electrical wiring for general condition, chaffing, security, and proper routing.		
ALL	29	Crankcase, Oil Sump, and Accessory Section - Inspect for cracks and evidence of oil leakage. Check bolts and nuts for looseness and retorque as necessary. Check crankcase breather lines for obstructions, security, and general condition.		
ALL	30	Starter, Starter Solenoid, and Electrical Connections and Cable - Check for condition of starter brushes, brush leads, and commutator.		
H	31	Bendix Drive Starter Assembly - Clean and lubricate starter drive assembly.		
206	32	Bendix magneto breaker compartment and timing. Refer to appropriate manual for instructions.		
ALL	33	Magnetos - Check external condition, security, and electrical leads for condition. Check timing to engine and internal timing if engine timing requires adjustment.		
206,A,B,C	34	Generator or Alternator, drive belt, pulley, and electrical connections		
ALL	35	Alternator Electrical Connections - Check condition and security. Check for cracks on the shank of terminals connecting to alternator BAT and GND connection posts. Make sure the terminals are not bent or under mechanical stress caused by the routing of the attached wire. Make sure the field wire connector on alternators is secure and firmly latched.		
D,E,F	36	Alternator support bracket for security (Refer to Service Letter SE71-42)		
ALL	37	Alternator and Mounting Bracket - Check condition and security. Check alternator belts for condition and proper adjustment. Check belt tension.		
ALL	38	Engine Cowling and Cowl Flaps - Inspect for cracks, dents, and other damage, security of cowl fasteners, and cowl mounted landing lights for attachment (if applicable). Check cowl flaps for condition, security, and operation. Check cowl flap controls for freedom of movement through full travel.		
ALL	39	Engine Baffles and Seals - Check condition and security of attachment.		
A,B,C,D,E,F	40	Turbocharger pressurized vent lines to fuel pump, discharge nozzles and fuel flow gage.		
ALL	41	Turbocharger (if applicable) A. Inspect turbocharger mounting bracket, ducting, linkage and attaching parts for general condition, linkage or damage and security of attachment. B. Check waste gate, actuator, controller, oil and vent lines, overboost relief valve, and compressor housing for leakage, apparent damage, security of attachment and evidence of wear. Check waste gate return spring for condition and security.		
H	42	Do an inspection on the multi-segment V-Band coupling clamps. Refer to appropriate manual for instructions.		
ALL	43	Vacuum Pump - Check for condition and security. Check vacuum system breather line for obstruction, condition, and security. Check oil separator and relief valve for condition and security, if applicable.		
ALL	44	Vaccum Pump (with wear indicator) - Visually inspect wear port indicator. If indicator is obserced in the lower 1/8th of the indicator hole replace the pump.		
ALL	45	Engine shock mounts, engine mount structure and ground straps - Check condition, security, and alignment.		
ALL	46	Fuel Strainer, Drain Valve, and Controls - Inspect plumbing and components for mounting and security. Check freedom of movement, security, and proper operation. Disassemble, flush, and clean screen bowl. Check cell vents, caps and placards.		
ALL	47	Auxiliary (Electric) Fuel Pump - Check pump and fittings for condition, operation and security. Remove and clean filter (as applicable).		
G	48	Throttle Operated Auxiliary Fuel Pump Switch. Check condition of wiring and security of components. Perform rigging check. Refer to appropriate manual for instructions.		
ALL	49	Engine-Driven Fuel Pump - Check for evidence of leakage, security of attachment, and general condition.		
H	50	Fuel line (Stainless steel tube assembly) and support clamp inspection and installation. Refer to Lycoming Service Bulletin Number 342E or later version.		

DOI - CESSNA 206 SERIES - 100 HOUR INSPECTIONS

ACFT TYPE		100 HOUR INSPECTION REQUIREMENTS	MECH	INSP
206,A,B,C,D,E,F,G	51	Fuel Injection System - Check security of fuel-air control unit, manifold valve, nozzles, screws and pump. Check fuel lines for leaks, interference and proper routing.		
H	52	Fuel Injection System - Check system for security and condition. Clean fuel inlet screen, check and clean injection nozzles and screens (if evidence of contamination is found), and lubricate air throttle shaft.		
206,A,B,C,D,E,F	53	Vapor return line and check valve.		
H	54	Idle and Mixture Adjustment - Check idle speed and idle mixture (lean rise). Adjust if necessary. Refer to appropriate manual for instructions.		
206,A,B,C,D,E,F,G	55	Engine Primer - Check for leakage, operation, and security.		
A,B,C	56	Exhaust system insulation blankets - Refer to appropriate manual for instructions.		
ALL	57	Exhaust System (Normally aspirated engine) - Inspect for cracks and security. Air leak check exhaust system.		
ALL	58	Exhaust System (turbocharged engine) - Inspect couplings, seals, clamps, and expansion joints for cracks. Air leak check exhaust.		
H	59	Exhaust System - Inspect for cracks and security. Special check in area of heat exchanger. Refer to appropriate manual for instructions.		
ALL	60	Firewall Structure - Inspect for wrinkles, damage, cracks, sheared rivets, ect. Check cowl shock mounts for condition and security.		
ALL	61	Interior Placards, Exterior Placards, Decals, Markings and Identification Plates - Inspect for security of installation and legibility. Consult Pilot’s Operating Handbook and FAA - Approved Airplane Flight Manual for required placards.		
206,A,B,C,D,E,F	62	Voltage regulator mounting and electrical leads - Inspect for general condition and security.		
ALL	63	Electrical horns, lights, switches, circuit breakers, fuses and clock fuse. Check operation and condition. Check for required number of spare fuses.		
206,A,B,C,D,E,F	64	Brake fluid, lines and hoses, linings, disc and clips, brake assemblies and master cylinders		
ALL	65	Wheels, Brake Discs, and Linings - Inspect for wear, cracks, warps, dents, or other damage. Check wheel through-bolts and nuts for looseness. Check condition of wheel bearings. Check brake fluid, lines and hoses, clips, brake assemblies and master cylinders		
ALL	66	Generally - Check for uncleanliness and loose equipment that might foul the controls.		
ALL	67	Emergency Locator Transmitter - Examine for security of attachment and check operation by verifying transmitter output. Check cumulative time and useful life of batteries in accordance with 14 CFR Part 91.207.		
ALL	68	Inspect all fluid carrying lines and hoses in the cabin and wing areas for leaks, damage, abrasion, and corrosion		
206,A,B,C,D,E,F,G	69	Reel Type Secondary seat Stops – Make sure the manual lock operates correctly.		
H	70	Microphone Push-To-Talk Switch - Clean the pilot's and copilot's microphone switches. Refer to appropriate manual for instructions.		
ALL	71	Seats - Inspect structure and mounting.		
ALL	72	Seat Belts, and Shoulder Harnesses - Check general condition and security. Check belts for thinning, fraying, cutting, broken stitches, or ultra-violet deterioration. Check system hardware and attaching brackets for security of installation. Inspect belts for condition and security of fasteners.		
H	73	Restraint System, front and rear - Check belts for thinning, fraying, cutting, broken stitches, or ultra-violet deterioration. Check system hardware for security of installation.		
H	74	Seats - Examine the seats to make sure they are serviceable and installed correctly. Make sure the seat stops and adjustment mechanism operate correctly. Examine the seat recline control and attaching hardware to make sure the hardware and lock are not damaged and are correctly installed. Lubricate the threads of the Seat Crank Handle Assembly with MIL-PRF-81322 general purpose grease.		
ALL	75	Seat Tracks, Stops - Inspect seat tracks for condition and security of installation. Check seat track stops for damage and correct location. Inspect seat rails for cracks. Refer to appropriate manual for instructions.		
206,A,B,C	76	Hydraulic pump - Check security of mounting, lines and fittings for damage and leaks.		

DOI - CESSNA 206 SERIES - 100 HOUR INSPECTIONS

ACFT TYPE		100 HOUR INSPECTION REQUIREMENTS	MECH	INSP
ALL	77	Instruments - Check for poor condition, mounting, marking, and (where practicable) improper operation.		
ALL	78	Gyro Filter - Inspect for damage, deterioration and contamination. Clean or replace if required.		
H	79	Primary Flight Display (PFD) Fan and Multi-Function Display (MFD) Fan, Deck Skin Fan, and Remote Avionics Cooling Fan - Operational Check. Refer to appropriate manual for instructions.		
ALL	80	Instrument Lines, Fittings, Ducting, and Instrument Panel Wiring - Check for proper routing, support, and security of attachment.		
ALL	81	Instrument panel, shock mounts, ground straps, cover, and decals and labeling - Inspect for deterioration, cracks, and security of attachment.		
ALL	82	Heater Components, Controls, Valves, Doors, Inlets, and Outlets - Inspect all lines, connections, ducts, clamps, seals, and gaskets for condition, restriction, and security. Check freedom of movement through full travel. Check friction locks for proper operation.		
ALL	83	Ventilation System - Inspect clamps, hoses, and valves for condition and security.		
ALL	84	Seat and cabin upholstery, trim and carpeting, head liner, sun visors, and ashtrays - Check condition and security. Clean as required.		
ALL	85	Inspect area beneath floor, lines, hoses, wires, and control cables.		
ALL	86	Pitot and static system - Inspect for security of installation, cleanliness, and evidence of damage.		
G,H	87	Pitot Tube and Stall Warning Vane - Check for condition and obstructions and verify operation of anti-ice heat.		
206,A,B,C,D,E,F	88	Stall warning sensing unit and pitot and stall warning heaters		
206,A,B,C,D,E,F	89	Radios, radio controls, radio antennas and avionics		
ALL	90	Battery, battery box and battery cables - Examine the general condition and security. Check charge and electrolyte level.		
G,H	91	Battery - Check general condition and security. Check level of electrolyte.		
G,H	92	Battery Box and Cables - Clean and remove any corrosion. Check cables for routing, support, and security of connections.		
ALL	93	Control Column - Inspect pulleys, cables, terminals, brackets, sprockets, bearings, chains, bungees, turnbuckles and fairleads for condition and security.		
ALL	94	Fuselage Surface - Inspect for skin damage, loose rivets, condition of paint, and check pitot-static ports and drain holes for obstruction. Inspect covers and fairings for security.		
ALL	29	Internal Fuselage Structure - Inspect bulkheads, doorposts, stringers, doublers, and skins for corrosion, cracks, buckles, loose rivets, bolts and nuts.		
A,B,C,D,E,F	95	Internal structure of control surfaces		
206,A,B,C,D,E,F	96	Balance weight attachment		
ALL	97	Control system travel stops		
ALL	98	Control system decals and labeling		
G	99	Flight Controls - Check freedom of movement and proper operation through full travel with and without flaps extended. Check electric trim controls for operation (as applicable).		
ALL	100	Flight and Engine Controls - Check for improper installation and improper operation.		
206,A,B,C,D,E,F	101	Trim control wheels, indicators, actuator and bungee		
D,E,F	102	Elevators, trim tab, hinges and push-pull tube		
ALL	103	External skins of control surfaces and tabs		
ALL	104	Wing Surfaces and Tips – Inspect for skin damage, loose rivets, and condition of paint.		
D,E,F	105	Inspect vertical stabilizer attachment bulkheads and attach fittings. Refer to appropriate manual for instructions.		

DOI - CESSNA 206 SERIES - 100 HOUR INSPECTIONS

ACFT TYPE		100 HOUR INSPECTION REQUIREMENTS	MECH	INSP
206,A,B,C	106	Tailcone bulkhead and vertical stabilizer attachment. 1. Inspect tailcone bulkhead for cracks. 2. Inspect vertical stabilizer attachment for cracks. Refer to appropriate manual for instructions.		
ALL	107	Vertical Stabilizer Fin - Inspect bulkheads, spars, ribs, and skins for cracks, wrinkles, loose rivets, corrosion, or other damage. Inspect vertical stabilizer attach bolts for looseness. Retorque as necessary. Check security of inspection covers, fairings, and tip.		
ALL	108	Vertical Stabilizer Fin and Tailcone - Inspect externally for skin damage and condition of paint.		
ALL	109	Horizontal Stabilizer and Tips - Inspect externally for skin damage and condition of paint.		
ALL	110	Horizontal Stabilizer and Tailcone structure - Inspect bulkheads, spars, ribs, and skins, for cracks, wrinkles, loose rivets, corrosion, or other damage. Inspect horizontal stabilizer attach bolts for looseness. Retorque as necessary. Check security of inspection covers, fairings, and tips.		
ALL	111	Wing Struts and Strut Fairings - Check for dents, cracks, loose screws and rivets, and condition of paint.		
G	112	Elevator/Rudder Downspring - Check structure, bolts, linkage, bellcrank, and push-pull tube for condition, operation, and security. Check cables for tension, routing, fraying, corrosion, and turnbuckle safety. Check travels if cables require tension adjustment or if stops are damaged.		
206	113	Elevator downspring system		
H	114	Elevator Downspring - Check structure, bolts, linkage, bellcrank, and push-pull tube for condition, operation, and security. Check cables for tension, routing, fraying, corrosion, and turnbuckle safety. Check travels if cables require tension adjustment or if stops are damaged.		
G,H	115	Elevator Trim Tab and Hinges - Check condition, security, and operation.		
G,H	116	Elevator Trim System - Check cables, push-pull rods, bellcranks, pulleys, turnbuckles, fairleads, rub strips, ect. for proper routing, condition, and security.		
G,H	117	Elevator Control - Check freedom of movement and proper operation through full travel.		
G	118	Elevator Control System - Inspect pulleys, cables, sprockets, bearings, chains, and turnbuckles for condition, security, and operation. Check cables for tension, routing, fraying, corrosion, and turnbuckle safety.		
G,H	119	Elevator, Hinges, Stops, and Cable Attachment - Check condition, security, and operation.		
G,H	120	Rudder - Inspect the rudder skins for cracks and loose rivets, rudder hinges for condition, cracks and security; hinge bolts, hinge bearings, hinge attach fittings, and bonding jumper for evidence of damage and wear, failed fasteners, and security. Inspect balance weight for looseness and the supporting structure for damage.		
G,H	121	Rudder, Tips, Hinges, Stops, Clips and Cable Attachment - Check condition, security, and operation.		
206,A,B,C,H	122	Rudder Control - Check freedom of movement and proper operation through full travel. Check rudder stops for damage and security.		
ALL	123	Rudder Pedals and Linkage - Check for general condition, proper rigging, and operation. Check for security of attachment.		
206,A,B,C,D,E,F	124	Flap control lever or switch, flap rollers and tracks, flap position transmitter and linkage, flap position indicator, flap electric motor and transmission, actuating cylinders and synchronizing system (as applicable).		
A,B,C,D,E,F	125	Flap motor, transmission, limit switches, structure, linkage, bell cranks etc		
A,B,C,G,H	126	Flap Actuator Threads - Clean and lubricate. Refer to appropriate manual for instructions.		
G,H	127	Flaps - Check tracks, rollers, and control rods for security of attachment. Check rod end bearings for corrosion. Check operation.		
G	128	Aileron, Elevator, and Rudder Stops - Check for damage and security. Compliance with Cessna Service Letter SE80-65 is required.		
G,H	129	Aileron Structure, Control Rods, Hinges, Balance Weights, Bell Cranks, Linkage, Bolts, Pulleys, and Pulley Brackets - Check condition, operation, and security of attachment.		
G,H	130	Aileron controls – Check freedom of movement and proper operation through full travel with and without flaps extended.		

DOI - CESSNA 206 SERIES - 100 HOUR INSPECTIONS

ACFT TYPE		100 HOUR INSPECTION REQUIREMENTS	MECH	INSP
A,B,C	131	Stabilator, trim tab, hinges and push-pull tube		
A,B,C	132	Stabilator trim tab actuator lubrication and tab free-play inspection		
206,A,B,C	133	Fuel tanks, fuel accumulator tank, fuel reservoir tanks, fuel lines, drains, filler caps, and placards		
D,E,F,H	134	Fuel Reservoir - Using quick drain, ensure no contamination exists.		
G	135	Integral Fuel Tanks - Check for evidence of leakage and condition of fuel caps, adapters, and placards.		
D,E,F,G	136	Fuel Tank or Bladder Drains - Drain water and sediment.		
H	137	Integral Fuel Bays - Check for evidence of leakage and condition of fuel caps, adapters, and placards. Using quick drains, ensure no contamination exists. Check quick drains for proper shut off.		
G	138	Fuel Bladders - Check for leaks and security, condition of fuel caps, adapters, and placards.		
206,A,B,C,G,H	139	Fuel System Vent Lines and Vent valves - Check vents for obstruction and proper positioning. Check valves for operation.		
ALL	140	Fuel Selector Valve - Check controls for detent in each position, security of attachment, and for proper placarding.		
H	141	Fuel Selector - Using quick drain, ensure no contamination exists.		
G	142	Fuel Line and Selector Valve Drain(s) – Remove plug and drain.		
206,A,B,C,D,E, F	143	Fuel quantity gages and transmitter units		
ALL	144	Nose gear wheel and wheel bearings – Clean, inspect and lube.		
H	145	Nose Landing Gear Wheel Fairings - Check for cracks, dents, and condition of paint.		
ALL	146	Nose Gear – Inspect and lubricate torque links, steering rods, and boots for condition and security of attachment. Check strut for evidence of leakage and proper extension. Check strut barrel for corrosion, pitting, and cleanliness. Check shimmy damper and/or bungees for operation, leakage, and attach points for wear and security. (service as required) Inspect fork for cracks, general condition, and security of attachment.		
ALL	147	Nose Gear Attachment Structure – Inspect for cracks, corrosion, or other damage and security of attachment.		
206,A,B,C	148	Main landing gear saddle. Inspect main landing gear saddle for cracks. Refer to appropriate manual for instructions.		
ALL	149	Main Wheel Bearings – Clean, inspect and lube.		
ALL	150	Main Landing Gear Attachment Structure – Check for damage, cracks and loose rivets, bolts and nuts and security of attachment.		
ALL Spring Assembly	151	Main Gear Spring Assemblies - Examine for cracks, dents, corrosion, condition of paint or other damage. Examine for chips, scratches, or other damage that lets corrosion get to the steel spring. Examine the axles for condition and security.		
ALL Tubular Struts	152	Main Gear Tubular Struts – Inspect for cracks, dents, corrosion, condition of paint or other damage. Check axles for condition and security.		
ALL	153	Main Landing Gear Wheel Fairings and Brake Fairings - Check for cracks, dents, condition of paint, and correct scraper clearance.		
ALL	154	Wheel fairings, Strut Fairings, Step and Spring Strut and Cuffs – Check for cracks, dents, and condition of paint.		
ALL	155	Brakes and Tires - Check brake pads, disks and hydraulic lines. Check tire treads for wear and cuts. Check tires for proper inflation.		
ALL	156	Brakes, Master cylinders, and Parking Brake – Check master cylinders and parking brake mechanism for condition and security. Check fluid level and test operation of the toe and parking brake.		
ALL	157	Windows, Windshield, Doors, and Seals - Inspect general condition. Check latches, hinges, and seals for condition, operation, and security of attachment.		
ALL	158	Portable Hand Fire Extinguisher - Inspect for proper operating pressure, condition, security of installation and servicing date.		

DOI - CESSNA 206 SERIES - 100 HOUR INSPECTIONS

ACFT TYPE		100 HOUR INSPECTION REQUIREMENTS	MECH	INSP
G,H	159	Vacuum System - Inspect for condition and security.		
G,H	160	Vacuum System Hoses - Inspect for hardness, deterioration, looseness, or collapsed hoses.		
G	161	Vacuum System Air Filter - Inspect for damage, deterioration and contamination. Clean or replace, if required. **NOTE:** Smoking will cause premature filter clogging.		
G	162	Vacuum System Relief Valve - Inspect for condition and security. Replace filter.		
ALL	163	Instrument, Cabin, Navigation, Beacon, Strobe, and Landing Lights - Check operation, condition of lens, and security of attachment.		
H	164	Power Junction Box - Check operation and condition. Check availability and condition of spare fuse (if applicable).		
ALL	165	Vacuum Regulator Valve and Filter - Inspect valve assembly for security of installation. Visually inspect filter for damage, deterioration and contamination. Clean or replace if required.		
ALL	166	Oxygen System - Inspect masks, hoses, lines, and fittings for condition, routing, and support. Test operation and check for leaks.		
ALL	167	Inspect each installed miscellaneous item that is not otherwise covered by this listing for improper installation and improper operation.		

DOI - CESSNA 206 SERIES - 100 HOUR INSPECTIONS

ZONE	ACFT TYPE		SUPPLEMENTAL 100 HOUR INSPECTION REQUIREMENTS	MECH	INSP
ARCTIC	ALL	167	Floats - Inspect as required by OEM ICAs.		
ARCTIC	ALL	168	Skis - Inspect as required by OEM ICAs.		
ARCTIC	ALL	169	De-ice/Anti-ice System - Inspect as required by OEM ICAs.		
ARCTIC		170			
ARCTIC		171			
ARCTIC		172			
ARCTIC		173			
ARCTIC		174			
ARCTIC		175			
ARCTIC		176			
ARCTIC		177			
ARCTIC		178			
ARCTIC		179			
ARCTIC		180			
TEMPERATE	ALL	181	Floats - Inspect as required by OEM ICAs.		
TEMPERATE	ALL	182	Skis - Inspect as required by OEM ICAs.		
TEMPERATE	ALL	183	De-ice/Anti-ice System - Inspect as required by OEM ICAs.		
TEMPERATE		184			
TEMPERATE		185			
TEMPERATE		186			
TEMPERATE		187			
TEMPERATE		188			
TEMPERATE		189			
TEMPERATE		190			
TEMPERATE		191			
TEMPERATE		192			
TEMPERATE		193			
TEMPERATE		194			
TEMPERATE		195			
	ALL	196	All panels opened for the inspection are closed and secure.		
	ALL	197	Run aircraft engine and leak check.		

DOI - CESSNA 206 SERIES - 100 HOUR INSPECTIONS

NOTES:

UNITED STATES DEPARTMENT OF THE INTERIOR

CESSNA 206 SERIES

200 HOUR SCHEDULED MAINTENANCE CHECKS

THE INSPECTION WORK SHEETS / PACKAGES IN THIS DOCUMENT ARE FOR THE 'UNITED STATES DEPARTMENT OF THE INTERIOR' AIRCRAFT ONLY.

Inspection Sheet - Block Explanation

Example

ACFT TYPE		EXAMPLE INSPECTION REQUIREMENTS	MECH	INSP
ALL	1	Engine - Inspect for evidence of oil and fuel leaks. Wash engine/engine compartment if needed.		
H	2	Idle and Mixture Adjustment - Check idle speed and idle mixture (lean rise). Adjust if necessary.		
A,B,C,D,E,F	3	Turbocharger pressurized vent lines to fuel pump, discharge nozzles and fuel flow gage.	N/A	
A	**B**	**C**	**D**	**E**

Block A All - All Cessna aircraft in the 206 Series (all models).

Other than 'All' designated with the specific 206 model.

Block B Each inspection and task is given a line item number in the 2nd column.

Block C Describes inspection tasks.

Block D Mechanic sign-off block. N/A (Not Applicable) - should be used if the inspection cannot or should not be carried out due to (but not limited to) - 1. Serial number range. 2. Unit or option not installed on aircraft. 3. Previously complied with. 4. Climate zone applicability. A note beside the N/A to indicate the reason for it is recommended.

Block E The (white) INSP block should be initialed by an inspector who witnessed the task carried out by the mechanic and completed a final inspection and/or functional check in accordance with the line item requirements and relevant technical publications. The inspector shall not initial the INSP block until after the mechanic has initialed the MECH block. In a block that requires a Maintenance Inspector, he shall initial the white INSP block whenever N/A has been entered in the MECH block.

Climate Zone Supplemental Inspections and Servicing

Before commencing inspection and servicing, it must be confirmed which climate zone the subject aircraft is operated in. If the aircraft is above the 49th parallel it is in the Arctic Zone. If the aircraft is below the 49th parallel it is in the Temperate zone. The extra line items listed for the appropriate climate zone shall be added to the servicing, the not applicable climate zone line items shall be noted as N/A in the sign-off block.

Inspections: To be completed in accordance with this manual.

Repairs: To be completed in accordance with the appropriate Cessna Maintenance Manual.

Acronyms in use

IAW - In Accordance With

CPCP - Corrosion Prevention and Control Program

NDI - Non Destructive Inspection

ICA - Instructions for Continued Airworthiness

STC - Supplemental Type Certificate

PSE - Principle Structural Element

N/A - Not Applicable (see MECH Block D above)

OEM - Original Equipment Manufacturer

DOI - CESSNA 206 SERIES - 200 HOUR INSPECTION

'N' NUMBER:_____ MODEL: _____ AIRCRAFT S/N:_____

TACH HOURS:_____ AIRCRAFT TOTAL TIME:_____ ENG. SMOH:_____ PROP SMOH:_____

ACFT TYPE		200 HOUR INSPECTION REQUIREMENTS	MECH	INSP
H	1	Remove the engine compressor inlet duct. Examine the compressor for blade condition on the impeller and oil deposits in the turbocharger. Make sure the compressor turns freely.		
H	2	Fuel Injector Nozzles - Remove and clean.		
G	3	Alternator Control Unit - Inspect wiring, mounting, condition, and wire routing.		
D,E,F,G,H	4	Turbocharger - Remove insulation blanket or heat shields and inspect for burnt area, bulges or cracks. Remove tailpipe and ducting; Use a flashlight and mirror in the tailpipe to inspect turbine for coking, carbonization, oil deposits and turbine impeller for damage.		
ALL	5	Heated Windshield Panel - Check operation, security of installation, electrical wiring, and condition of storage bag.		
ALL	6	Instrument Panel Mounted Avionics Units (Including Audio Panel, VHF Nav/Com(s), ADF, GPS, Transponder, and Compass System) - Inspect for deterioration, cracks, and security of instrument panel mounts. Inspect for security of electrical connections, condition, and security of wire routing.		
G	7	Instrument Panel and Control Pedestal - Inspect wiring, mounting, and terminals for condition and security. Check resistance between stationary panel and instrument panel for proper ground.		
G,H	8	Avionics Operating Controls - Inspect for security and proper operation of controls and switches and ensure that all digital segments will illuminate properly.		
G	9	Remote Mounted Avionics - Inspect for security of wire ties and electrical connectors, condition and security of wire routing. Also check for evidence of damage and cleanliness.		
ALL	10	Navigation Indicators, Controls, and Components - Inspect for condition and security.		
ALL	11	Magnetic Compass - Inspect for security of installation, cleanliness, and evidence of damage. Verify correction card is present.		
ALL	12	General Airplane and System Wiring - Inspect for proper routing, chafing, broken or loose terminals, general condition, broken or inadequate clamps, and sharp bends in wiring.		
G,H	13	Switch and Circuit Breaker Panel, Terminal Blocks and Junction Boxes - Inspect wiring and terminals for condition and security.		
G,H	14	Microphones, Headsets, and Jacks - Inspect for cleanliness, security, and evidence of damage.		
G,H	15	Upholstery, Headliner, Trim and Carpeting - Check condition, security and clean as required.		
D,E,F,G,H	16	Antennas and Cables - Inspect for security of attachment, connection, and condition.		
G,H	17	Flap Structure, Linkage, Bellcranks, Pulleys, and Pulley Brackets – Check for condition operation and security.		
G,H	18	Wing Flap Control – Check operation through full travel and observe Flap Position indicator for proper indication.		
G,H	19	Flaps and Cables – check cables for proper tension, routing, fraying, corrosion, and turnbuckle safety. Check travel if cable tension requires adjustment.		
G,H	20	Flap Motor, Actuator, and Limit Switches (electric flaps) – Check wiring and terminals for condition and security. Check actuator for condition and security.		
G,H	21	Rudder - Check internal surfaces for corrosion, condition of fasteners, and balance weight attachment.		
G	22	Trim Controls and Indicators - Check freedom of movement and proper operation through full travel. Check pulleys, cables, sprockets, bearings, chains, bungees, and turnbuckles for condition and security. Check electric trim controls for operation as applicable.		
G,H	23	Ailerons and cables – Check operation and security of stops. Check cables for tension, routing, fraying, corrosion, and turnbuckle safety. Check travel if cable tension requires adjustment or stops are damaged. Check fairleads and rub strips for condition.		
G	24	Elevator Control System - Inspect pulleys, cables, sprockets, bearings chains, and turnbuckles for condition, security, and operation.		
H	25	Elevator Trim Control and Indicator - Check freedom of movement and proper operation through full travel. Check pulleys, cables, sprockets, bearings, chains, and turnbuckles for condition and security. Check electric trim controls for operation as applicable. Check cables for tension, routing, fraying, corrosion, and turnbuckle safety.		
G,H	26	Elevator Trim Tab Stop Blocks - Inspect for damage and security.		

DOI - CESSNA 206 SERIES - 200 HOUR INSPECTIONS

ACFT TYPE		200 HOUR INSPECTION REQUIREMENTS	MECH	INSP
D,E,F,G	27	Elevator Trim Tab Actuator - Free-Play limits inspection. Refer to appropriate manual for instructions.		
H	28	Elevator Trim Tab Actuator - Examine the free play limits. Refer to appropriate manual for instructions. If the free play is more than the permitted limits, lubricate the actuator and examine the free play limits again. If the free play is still more than the permitted limits, replace the actuator.		
ALL	29	Control Wheel Lock - Check general condition and operation.		
ALL	30	Fuselage Mounted Equipment - Check for general condition and security of attachment.		
ALL	31	Control Linkage - Inspect pulleys, cables, bearings, and turnbuckles for condition and security.		
ALL	32	Wing Spar and Wing Strut Fittings – Check for evidence of wear. Check attach bolts for indications of looseness and retorque as required.		
ALL	33	Wing Structure – Inspect spars, ribs, skins, and stringers for cracks, winkles, loose rivets, corrosion, or other damage.		
ALL	34	Wing Access Plates – Check for damage and security of installation.		
ALL	35	External Power Receptacle and Power Cables - Inspect for condition and security.		
ALL	36	Brake Lines, Wheel Cylinders, Hoses, Clamps and Fittings – Checks for leaks, condition and security and hoses for bulges and deterioration. Check brake lines for proper routing and support. Check brake master cylinders fluid level and fill as required.		

DOI - CESSNA 206 SERIES - 200 HOUR INSPECTIONS

ZONE	ACFT TYPE		SUPPLEMENTAL 200 HOUR INSPECTION REQUIREMENTS	MECH	INSP
ARCTIC	ALL	37	Floats - Inspect as required by OEM ICAs.		
ARCTIC	ALL	38	Skis - Inspect as required by OEM ICAs.		
ARCTIC	ALL	39	De-ice/Anti-ice System - Inspect as required by OEM ICAs.		
ARCTIC		40			
ARCTIC		41			
ARCTIC		42			
ARCTIC		43			
ARCTIC		44			
ARCTIC		45			
ARCTIC		46			
ARCTIC		47			
ARCTIC		48			
ARCTIC		49			
ARCTIC		50			
TEMPERATE	ALL	51	Floats - Inspect as required by OEM ICAs.		
TEMPERATE	ALL	52	Skis - Inspect as required by OEM ICAs.		
TEMPERATE	ALL	53	De-ice/Anti-ice System - Inspect as required by OEM ICAs.		
TEMPERATE		54			
TEMPERATE		55			
TEMPERATE		56			
TEMPERATE		57			
TEMPERATE		58			
TEMPERATE		59			
TEMPERATE		60			
TEMPERATE		61			
TEMPERATE		62			
TEMPERATE		63			
TEMPERATE		64			
TEMPERATE		65			
	ALL	66	All panels opened for the inspection are closed and secure.		
	ALL	67	Run aircraft engine and leak check.		

DOI - CESSNA 206 SERIES - 200 HOUR INSPECTIONS

NOTES:

ASSURE PROPER MAINTENANCE RECORD ENTRIES HAVE BEEN MADE IAW 14 CFR 43.9

THE AIRCRAFT RECORDS CONSIST OF THE FOLLOWING;

1. AIRCRAFT, ENGINE & PROPELLER HARD LOGS.
2. ALL FORM 337'S, MAJOR REPAIR & ALTERATION.
3. COMPLIANCE LIST OF ALL PERTINENT AIRWORTHINESS DIRECTIVES.
4. MAINTENANCE SCHEDULE- LIST OF REQUIRED SPECIAL INSPECTIONS, COMPONENT OVERHAUL & TIME-LIFE LIMITS.
5. CURRENT & HISTORICAL WEIGHT & BALANCE STATUS & EQUIPMENT LIST
6. MINIMUM EQUIPMENT LIST AS REQUIRED.
7. SPECIAL FLIGHT AUTHORIZATIONS AND/OR SUPPLEMENTS

UNITED STATES DEPARTMENT OF THE INTERIOR

CESSNA 206 SERIES

ANNUAL SCHEDULED MAINTENANCE CHECKS

ANNUAL INCLUDES ALL 50 HOUR, 100 HOUR AND 200 HOUR INSPECTIONS

THE INSPECTION WORK SHEETS / PACKAGES IN THIS DOCUMENT ARE FOR THE 'UNITED STATES DEPARTMENT OF THE INTERIOR' AIRCRAFT ONLY.

Inspection Sheet - Block Explanation

Example

ACFT TYPE		EXAMPLE INSPECTION REQUIREMENTS	MECH	INSP
ALL	1	Engine - Inspect for evidence of oil and fuel leaks. Wash engine/engine compartment if needed.		
H	2	Idle and Mixture Adjustment - Check idle speed and idle mixture (lean rise). Adjust if necessary.		
A,B,C,D,E,F	3	Turbocharger pressurized vent lines to fuel pump, discharge nozzles and fuel flow gage.	N/A	
A	**B**	**C**	**D**	**E**

Block A All - All Cessna aircraft in the 206 Series (all models).

Other than 'All' designated with the specific 206 model.

Block B Each inspection and task is given a line item number in the 2nd column.

Block C Describes inspection tasks.

Block D Mechanic sign-off block. N/A (Not Applicable) - should be used if the inspection cannot or should not be carried out due to (but not limited to) - 1. Serial number range. 2. Unit or option not installed on aircraft. 3. Previously complied with. 4. Climate zone applicability. A note beside the N/A to indicate the reason for it is recommended.

Block E The (white) INSP block should be initialed by an inspector who witnessed the task carried out by the mechanic and completed a final inspection and/or functional check in accordance with the line item requirements and relevant technical publications. The inspector shall not initial the INSP block until after the mechanic has initialed the MECH block. In a block that requires a Maintenance Inspector, he shall initial the white INSP block whenever N/A has been entered in the MECH block.

Climate Zone Supplemental Inspections and Servicing

Before commencing inspection and servicing, it must be confirmed which climate zone the subject aircraft is operated in. If the aircraft is above the 49th parallel it is in the Arctic Zone. If the aircraft is below the 49th parallel it is in the Temperate zone. The extra line items listed for the appropriate climate zone shall be added to the servicing, the not applicable climate zone line items shall be noted as N/A in the sign-off block.

Inspections: To be completed in accordance with this manual.

Repairs: To be completed in accordance with the appropriate Cessna Maintenance Manual.

Acronyms in use

IAW - In Accordance With

CPCP - Corrosion Prevention and Control Program

NDI - Non Destructive Inspection

ICA - Instructions for Continued Airworthiness

STC - Supplemental Type Certificate

PSE - Principle Structural Element

N/A - Not Applicable (see MECH Block D above)

OEM - Original Equipment Manufacturer

DOI - CESSNA 206 SERIES - ANNUAL INSPECTION

'N' NUMBER:_____ MODEL: _____ AIRCRAFT S/N:_____

TACH HOURS:_____ AIRCRAFT TOTAL TIME:_____ ENG. SMOH:_____ PROP SMOH:_____

ACFT TYPE		ANNUAL INSPECTION REQUIREMENTS	MECH	INSP
ALL	1	Inspect aircraft records to verify that all applicable Cessna Service Information Letters, Cessna Service Bulletins and Supplier Service Bulletins are complied with.		
ALL	2	Inspect aircraft records to verify that all applicable Airworthiness Directives and Federal Aviation Regulations are complied with.		
ALL	3	Inspect aircraft records to verify that all logbook entries required by the Federal Aviation Regulations are complied with.		
ALL	4	Before inspection, remove all inspection plates, access doors, fairing, and cowling. Thoroughly clean the aircraft and aircraft engine.		
ALL	5	Spinner and Spinner Bulkhead - Remove spinner, wash, and inspect for cracks and fractures.		
H	6	Spinner - Complete a check of its general condition and that it is correctly attached. Make sure it has a minimum clearance of 0.14 inch (3.56 mm) to the propeller blades.		
ALL	7	Propeller Blades - Inspect for cracks, dents, nicks, scratches, errosion, corrosion, or other damage.		
ALL	8	Propeller lubrication - Refer to OEM Maintenance Manual.		
ALL	9	Propeller - Inspect hub, bolts and nuts for general condition and security of installation. Check safety wire for signs of looseness and Retorque mounting bolts as required.		
ALL	10	Propeller Governor and Control - Inspect for oil and grease leaks. If leakage is evident, refer to OEM Service Manual.		
H	11	Propeller Governor and Control - Examine the security and operation of the controls. The maximum linear freeplay is 0.050 inch.		
G,H	12	Propeller Anti-ice Slip Rings, Brushes and Boots - Inspect for condition and security. Perform operational check.		
D,E,F,G,H	13	Engine support structure. Make sure you inspect these areas: 1. Tunnel structure side walls. 2. Shock mount support brackets. NOTE: Corrosion Prevention and Control Program Inspection Item. Refer to appropriate manual for instructions.		
G	14	Vacuum Manifold Check Valve (If so equipped) - Refer to the latest revision of Airborne Service Letter 39 for date of manufacture information and check procedures.		
H	15	Vacuum Manifold Check Valve - Complete a check for the proper operation. (Only airplanes with dual vacuum pumps or Airborne manifolds. Refer to the Airborne Air & Fuel Products Service Letter Number 39A or latest revision, and in accordance with SB02-37-04.) Refer to appropriate manual for instructions.		
206,A,B,C,G	16	Engine, Propeller Controls and Linkage - Check general condition, freedom of movement through full range. Check for proper travel, security of attachment, and for evidence of wear. Check friction locks for proper operation.		
D,E,F	17	Engine controls and linkage - Inspect for general condition and freedom of movement. These controls are not repairable, replace throttle, propeller, and mixture controls at each engine overhaul.		
H	18	Engine Controls and Linkage - Examine the general condition and freedom of movement through the full range. Complete a check for the proper travel, security of attachment, and for evidence of wear. Complete a check of the friction lock and vernier adjustment for proper operation. Complete a check that the throttle, fuel mixture, and propeller governor arms operate through their full arc of travel. The maximum linear freeplay is 0.050 inch.		
ALL	19	Engine - Inspect for evidence of oil, hydraulic and fuel leaks. Wash engine and check for security of accessories.		
ALL	20	Engine Cylinders, Rocker Box Covers and Pushrod Housings - Check for fin damage, cracks, oil leakage, security of attachment and general condition.		
H	21	Remove the engine compressor inlet duct. Examine the compressor for blade condition on the impeller and oil deposits in the turbocharger. Make sure the compressor turns freely.		
ALL	22	Ignition Harness and Insulators - Check for proper routing, deterioration, and condition of terminals.		
G,H	23	Ignition Switch and Electrical Harness - Inspect for damage, condition, and security.		

DOI - CESSNA 206 SERIES - ANNUAL INSPECTIONS

ACFT TYPE		ANNUAL INSPECTION REQUIREMENTS	MECH	INSP
ALL	24	Cylinder Compression - Complete a differential compression test. If there is weak cylinder compression, refer to appropriate service manual.		
ALL	25	Spark Plugs - Remove, clean, analyze, test, gap, and rotate top plugs to bottom and bottom plugs to top.		
ALL	26	Oil Cooler - Check for obstructions, leaks, and security of attachment.		
ALL	27	Engine Oil - Drain oil sump and oil cooler. Check for metal particles or foreign material in filter, on sump drain plug, and on engine suction screen. If applicable, refer to Textron Lycoming Service Bulletin #480C or latest revision. Replace filter, and refill with recommended grade aviation oil.		
G,H	28	Induction Airbox, Valves, Doors, and Controls - Remove air filter and inspect hinges, doors, seals, and attaching parts for wear and security. Check operation. Clean and inspect air filter and re-oil if flock coated. Replace paper filters as required.		
G,H	29	Alternate Induction Air System - Check for obstructions, operation, and security.		
ALL	30	All Engine Compartment Hoses, Metal Lines, and Fittings - Inspect for signs of oil, hydraulic and fuel leaks. Check for abrasions, chafing, security, proper routing and support and for evidence of deterioration.		
ALL	31	Engine compartment cold and hot air hoses - Check for chaffing, holes, and proper clamping.		
ALL	32	Check all engine compartment electrical wiring for general condition, chaffing, security, and proper routing.		
ALL	33	Crankcase, Oil Sump, and Accessory Section - Inspect for cracks and evidence of oil leakage. Check bolts and nuts for looseness and retorque as necessary. Check crankcase breather lines for obstructions, security, and general condition.		
ALL	34	Starter, Starter Solenoid, and Electrical Connections and Cable - Check for condition of starter brushes, brush leads, and commutator.		
H	35	Bendix Drive Starter Assembly - Clean and lubricate starter drive assembly.		
206	36	Bendix magneto breaker compartment and timing. Refer to appropriate manual for instructions.		
ALL	37	Magnetos - Check external condition, security, and electrical leads for condition. Check timing to engine and internal timing if engine timing requires adjustment.		
G	38	Alternator Control Unit - Inspect wiring, mounting, condition, and wire routing.		
206,A,B,C	39	Generator or Alternator, drive belt, pulley, and electrical connections		
ALL	40	Alternator Electrical Connections - Check condition and security. Check for cracks on the shank of terminals connecting to alternator BAT and GND connection posts. Make sure the terminals are not bent or under mechanical stress caused by the routing of the attached wire. Make sure the field wire connector on alternators is secure and firmly latched.		
D,E,F	41	Alternator support bracket for security (Refer to Service Letter SE71-42)		
ALL	42	Alternator and Mounting Bracket - Check condition and security. Check alternator belts for condition and proper adjustment. Check belt tension.		
ALL	43	Engine Cowling and Cowl Flaps - Inspect for cracks, dents, and other damage, security of cowl fasteners, and cowl mounted landing lights for attachment (if applicable). Check cowl flaps for condition, security, and operation. Check cowl flap controls for freedom of movement through full travel.		
ALL	44	Engine Baffles and Seals - Check condition and security of attachment.		
A,B,C,D,E,F	45	Turbocharger pressurized vent lines to fuel pump, discharge nozzles and fuel flow gage.		
ALL	46	Turbocharger (if applicable) A. Inspect turbocharger mounting bracket, ducting, linkage and attaching parts for general condition, linkage or damage and security of attachment. B. Check waste gate, actuator, controller, oil and vent lines, overboost relief valve, and compressor housing for leakage, apparent damage, security of attachment and evidence of wear. Check waste gate return spring for condition and security.		
D,E,F,G,H	47	Turbocharger - Remove insulation blanket or heat shields and inspect for burnt area, bulges or cracks. Remove tailpipe and ducting; Use a flashlight and mirror in the tailpipe to inspect turbine for coking, carbonization, oil deposits and turbine impeller for damage.		

DOI - CESSNA 206 SERIES - ANNUAL INSPECTIONS

ACFT TYPE		ANNUAL INSPECTION REQUIREMENTS	MECH	INSP
H	48	Do an inspection on the multi-segment V-Band coupling clamps. Refer to appropriate manual for instructions.		
ALL	49	Vacuum pump - Check for condition and security. Check vacuum system breather line for obstruction, condition, and security. Check oil separator and relief valve for condition and security, if applicable.		
ALL	50	Vaccum Pump (with wear indicator) - Visually inspect wear port indicator. If indicator is observed in the lower 1/8th of the indicator hole replace the pump.		
ALL	50	Engine shock mounts, engine mount structure and ground straps - Check condition, security, and alignment.		
ALL	51	Fuel Strainer, Drain Valve, and Controls - Inspect plumbing and components for mounting and security. Check freedom of movement, security, and proper operation. Disassemble, flush, and clean screen bowl. Check cell vents, caps and placards.		
ALL	52	Auxiliary (Electric) Fuel Pump - Check pump and fittings for condition, operation and security. Remove and clean filter (as applicable).		
G	53	Throttle Operated Auxiliary Fuel Pump Switch. Check condition of wiring and security of components. Perform rigging check. Refer to appropriate manual for instructions.		
ALL	54	Engine-Driven Fuel Pump - Check for evidence of leakage, security of attachment, and general condition.		
H	55	Fuel line (Stainless steel tube assembly) and support clamp inspection and installation. Refer to Lycoming Service Bulletin Number 342E or later version.		
206,A,B,C,D,E,F,G	56	Fuel Injection System - Check security of fuel-air control unit, manifold valve, nozzles, screws and pump. Check fuel lines for leaks, interference and proper routing.		
H	57	Fuel Injection System - Check system for security and condition. Clean fuel inlet screen, check and clean injection nozzles and screens (if evidence of contamination is found), and lubricate air throttle shaft.		
206,A,B,C,D,E,F	58	Vapor return line and check valve		
H	59	Idle and Mixture Adjustment - Check idle speed and idle mixture (lean rise). Adjust if necessary. Refer to appropriate manual for instructions.		
206,A,B,C,D,E,F,G	60	Engine Primer - Check for leakage, operation, and security.		
A,B,C	61	Exhaust system insulation blankets - Refer to appropriate manual for instructions.		
ALL	62	Exhaust System (Normally aspirated engine) - Inspect for cracks and security. Air leak check exhaust system. Refer to appropriate manual for instructions.		
ALL	63	Exhaust System (turbocharged engine) - Inspect couplings, seals, clamps, and expansion joints for cracks. Air leak check exhaust. Refer to appropriate manual for instructions.		
H	64	Exhaust System - Inspect for cracks and security. Special check in area of heat exchanger. Refer to appropriate manual for instructions.		
ALL	65	Firewall Structure - Inspect for wrinkles, damage, cracks, sheared rivets, ect. Check cowl shock mounts for condition and security.		
206,A,B,C	66	Inspect firewall. 1. Inspect around exhaust hanger brackets for cracks. 2. Inspect webs and around stiffeners for cracks. Complete inspection as instructed below.		
TITLE		Firewall Inspection		

EFFECTIVITY	**206 S/N**		
	206-0001 thru 206-0275	P206-0001 thru P206-0160	U206-0276 thru U206-0437
		P206-0161 thru P206-0519	U206-0438 thru U206-1234

PURPOSE	To verify the integrity of the firewall.

		MECH	INSP
INSPECTION INSTRUCTIONS	A. Remove engine cowls. Refer to appropriate manual for instructions.		
	B. Disconnect electrical power from airplane.		
	C. Visually inspect around exhaust hanger brackets for cracks.		
	(1) Clean area before inspecting if grime or debris are present.		

	MECH	INSP
D. Visually inspect webs and around stiffeners for cracks or sheared rivets.		
E. Connect electrical power and install engine cowls. Refer to appropriate manual for instructions.		

ACCESS AND DETECTABLE CRACK SIZE

ACCESS/LOCATION	DETECTABLE CRACK SIZE
Engine compartment	Not Applicable

INSPECTION METHOD	Visual

		MECH	INSP
REPAIR AND MODIFICATION	A. If cracks are found, make repairs in accordance with appropriate manual. Coordinate any repair not available in the appropriate manual with Cessna Customer Service prior to beginning the repair. Note that the firewall is stainless steel, and repair materials and fasteners must be made of like materials.		

ACFT TYPE		ANNUAL INSPECTION REQUIREMENTS	MECH	INSP
ALL	67	Interior Placards, Exterior Placards, Decals, Markings and Identification Plates - Inspect for security of installation and legibility. Consult Pilot's Operating Handbook and FAA - Approved Airplane Flight Manual for required placards.		
206,A,B,C,D,E,F	68	Voltage regulator mounting and electrical leads - Inspect for general condition and security.		
ALL	69	Electrical horns, lights, switches, circuit breakers, fuses and clock fuse. Check operation and condition. Check for required number of spare fuses.		
206,A,B,C,D,E,F	70	Brake fluid, lines and hoses, linings, disc and clips, brake assemblies and master cylinders		
ALL	71	Wheels, Brake Discs, and Linings - Inspect for wear, cracks, warps, dents, or other damage. Check wheel through-bolts and nuts for looseness. Check condition of wheel bearings. Check brake fluid, lines and hoses, clips, brake assemblies and master cylinders		
ALL	72	Emergency Locator Transmitter - Examine for security of attachment and check operation by verifying transmitter output. Check cumulative time and useful life of batteries in accordance with 14 CFR Part 91.207.		
ALL	73	Inspect all fluid carrying lines and hoses in the cabin and wing areas for leaks, damage, abrasion, and corrosion		
206,A,B,C,D,E,F,G	74	Reel Type Secondary seat Stops – Make sure the manual lock operates correctly.		
H	75	Microphone Push-To-Talk Switch - Clean the pilot's and copilot's microphone switches. Refer to appropriate manual for instructions.		
G,H	76	Upholstery, Headliner, Trim and Carpeting - Check condition, security and clean as required.		
ALL	77	Seats - Inspect structure and mounting.		
ALL	78	Seat Belts, and Shoulder Harnesses - Check general condition and security. Check belts for thinning, fraying, cutting, broken stitches, or ultra-violet deterioration. Check system hardware and attaching brackets for security of installation. Inspect belts for condition and security of fasteners.		
H	79	Restraint System, front and rear - Check belts for thinning, fraying, cutting, broken stitches, or ultra-violet deterioration. Check system hardware for security of installation.		
H	80	Seats - Examine the seats to make sure they are serviceable and installed correctly. Make sure the seat stops and adjustment mechanism operate correctly. Examine the seat recline control and attaching hardware to make sure the hardware and lock are not damaged and are correctly installed. Lubricate the threads of the Seat Crank Handle Assembly with MIL-PRF-81322 general purpose grease.		
H	81	AMSAFE Aviation Inflatable Restraint (AAIR) - Examine the restraint for dirt, frayed edges, unserviceable stitching, loose connections, and other wear. Refer to appropriate manual for instructions.		
ALL	82	Seat Tracks, Stops - Inspect seat tracks for condition and security of installation. Check seat track stops for damage and correct location. Inspect seat rails for cracks. Refer to appropriate manual for instructions.		
206,A,B,C	83	Hydraulic pump - Check security of mounting, lines and fittings for damage and leaks.		

DOI - CESSNA 206 SERIES - ANNUAL INSPECTIONS

ACFT TYPE		ANNUAL INSPECTION REQUIREMENTS	MECH	INSP
ALL	84	External Power Receptacle and Power Cables - Inspect for condition and security.		
ALL	85	Instruments - Check for poor condition, mounting, markings, and (where practicable) improper operation.		
ALL	86	Gyro Filter - Inspect for damage, deterioration and contamination. Clean or replace if required.		
H	87	Primary Flight Display (PFD) Fan and Multi-Function Display (MFD) Fan, Deck Skin Fan, and Remote Avionics Cooling Fan - Operational Check. Refer to appropriate manual for instructions.		
ALL	88	Instrument Lines, Fittings, Ducting, and Instrument Panel Wiring - Check for proper routing, support, and security of attachment.		
ALL	89	Instrument panel, shock mounts, ground straps, cover, and decals and labeling - Inspect for deterioration, cracks, and security of attachment.		
ALL	90	Instrument Panel Mounted Avionics Units (Including Audio Panel, VHF Nav/Com(s), ADF, GPS, Transponder, and Compass System) - Inspect for deterioration, cracks, and security of instrument panel mounts. Inspect for security of electrical connections, condition, and security of wire routing.		
G	91	Instrument Panel and Control Pedestal - Inspect wiring, mounting, and terminals for condition and security. Check resistance between stationary panel and instrument panel for proper ground.		
G,H	92	Avionics Operating Controls - Inspect for security and proper operation of controls and switches and ensure that all digital segments will illuminate properly.		
G	93	Remote Mounted Avionics - Inspect for security of wire ties and electrical connectors, condition and security of wire routing. Also check for evidence of damage and cleanliness.		
ALL	94	Navigation Indicators, Controls, and Components - Inspect for condition and security.		
ALL	95	Magnetic Compass - Inspect for security of installation, cleanliness, and evidence of damage. Verify correction card is present.		
ALL	96	General Airplane and System Wiring - Inspect for proper routing, chafing, broken or loose terminals, general condition, broken or inadequate clamps, and sharp bends in wiring.		
G,H	97	Switch and Circuit Breaker Panel, Terminal Blocks and Junction Boxes - Inspect wiring and terminals for condition and security.		
G,H	98	Microphones, Headsets, and Jacks - Inspect for cleanliness, security, and evidence of damage.		
ALL	99	Heater Components, Controls, Valves, Doors, Inlets, and Outlets - Inspect all lines, connections, ducts, clamps, seals, and gaskets for condition, restriction, and security. Check freedom of movement through full travel. Check friction locks for proper operation.		
ALL	100	Ventilation System - Inspect clamps, hoses, and valves for condition and security.		
ALL	101	Seat and cabin upholstery, trim and carpeting, head liner, sun visors, and ashtrays - Check condition and security. Clean as required.		
ALL	102	Area beneath floor, lines, hoses, wires, and control cables		
ALL	103	Pitot and static system - Inspect for security of installation, cleanliness, and evidence of damage.		
G,H	104	Pitot Tube and Stall Warning Vane - Check for condition and obstructions and verify operation of anti-ice heat.		
206,A,B,C,D,E,F	105	Stall warning sensing unit and pitot and stall warning heaters		
D,E,F,G,H	106	Antennas and Cables - Inspect for security of attachment, connection, and condition.		
206,A,B,C,D,E,F	107	Radios, radio controls, radio antennas and avionics		
ALL	108	Battery, battery box and battery cables - Examine the general condition and security. Check charge and electrolyte level.		
G,H	109	Battery - Check general condition and security. Check level of electrolyte. (G - Check electrolyte level and clean battery box each ANNUALs or 90 days.)		
G,H	110	Battery Box and Cables - Clean and remove any corrosion. Check cables for routing, support, and security of connections.		
H	111	Standby Battery - Complete the Standby Battery Capacity Test. Refer to appropriate manual for instructions.		
H	112	Power Junction Box - Check operation and condition. Check availability and condition of spare fuse (if applicable).		

DOI - CESSNA 206 SERIES - ANNUAL INSPECTIONS

ACFT TYPE		ANNUAL INSPECTION REQUIREMENTS	MECH	INSP
H	113	Essential and Crossfeed Bus Diodes - Check for proper operation. Complete the Essential and Crossfeed Bus Diode Inspection. Refer to appropriate manual for instructions.		
ALL	114	Control Column - Inspect pulleys, cables, terminals, brackets, sprockets, bearings, chains, bungees, turnbuckles and fairleads for condition and security.		
ALL	115	Autopilot Rigging - Refer to Autopilot - Maintenance Practices.		
ALL	116	Fuselage Mounted Equipment - Check for general condition and security of attachment.		
ALL	117	Fuselage Surface - Inspect for skin damage, loose rivets, condition of paint, and check pitot-static ports and drain holes for obstruction. Inspect covers and fairings for security.		
ALL	118	Internal Fuselage Structure - Inspect bulkheads, doorposts, stringers, doublers, and skins for corrosion, cracks, buckles, loose rivets, bolts and nuts.		
A,B,C,D,E,F	119	Internal structure of control surfaces		
206,A,B,C,D,E,F	120	Balance weight attachment		
ALL	121	Control Wheel Lock - Check general condition and operation.		
ALL	122	Control Linkage - Inspect pulleys, cables, bearings, and turnbuckles for condition and security.		
ALL	123	Control system travel stops		
ALL	124	Control system decals and labeling		
G	125	Flight Controls - Check freedom of movement and proper operation through full travel with and without flaps extended. Check electric trim controls for operation (as applicable).		
ALL	126	Flight and Engine Controls - Check for improper installation and improper operation.		
206,A,B,C,D,E,F	127	Trim control wheels, indicators, actuator and bungee		
G	128	Trim Controls and Indicators - Check freedom of movement and proper operation through full travel. Check pulleys, cables, sprockets, bearings, chains, bungees, and turnbuckles for condition and security. Check electric trim controls for operation as applicable.		
D,E,F	129	Elevators, trim tab, hinges and push-pull tube		
ALL	130	External skins of control surfaces and tabs		
ALL	131	Wing Surfaces and Tips – Inspect for skin damage, loose rivets, and condition of paint.		
ALL	132	Wing Access Plates – Check for damage and security of installation.		
ALL	133	Wing Spar and Wing Strut Fittings – Check for evidence of wear. Check attach bolts for indications of looseness and retorque as required.		
ALL	134	Wing Structure – Inspect spars, ribs, skins, and stringers for cracks, winkles, loose rivets, corrosion, or other damage.		
ALL	135	Wing structure internal. Make sure you inspect these areas: 1. Main spar upper and lower carry-thru fittings, 2. Main spar upper and lower caps, 3. Main spar web. **NOTE:** Corrosion Prevention and Control Program Inspection Item (baseline interval, Refer to appropriate manual for instructions.)		
D,E,F	136	Inspect vertical stabilizer attachment bulkheads and attach fittings.		
206,A,B,C	137	Tailcone bulkhead and vertical stabilizer attachment. 1. Inspect tailcone bulkhead for cracks. 2. Inspect vertical stabilizer attachment for cracks. Refer to appropriate manual for instructions.		
ALL	138	Vertical Stabilizer Fin - Inspect bulkheads, spars, ribs, and skins for cracks, wrinkles, loose rivets, corrosion, or other damage. Inspect vertical stabilizer attach bolts for looseness. Retorque as necessary. Check security of inspection covers, fairings, and tip.		

DOI - CESSNA 206 SERIES - ANNUAL INSPECTIONS

ACFT TYPE		ANNUAL INSPECTION REQUIREMENTS	MECH	INSP
ALL	139	Vertical Stabilizer Fin and Tailcone - Inspect externally for skin damage and condition of paint.		
ALL	140	Horizontal Stabilizer and Tips - Inspect externally for skin damage and condition of paint.		
ALL	141	Horizontal Stabilizer and Tailcone structure - Inspect bulkheads, spars, ribs, and skins, for cracks, wrinkles, loose rivets, corrosion, or other damage. Inspect horizontal stabilizer attach bolts for looseness. Retorque as necessary. Check security of inspection covers, fairings, and tips.		
ALL	142	Wing Struts and Strut Fairings - Check for dents, cracks, loose screws and rivets, and condition of paint.		
G	143	Elevator/Rudder Downspring - Check structure, bolts, linkage, bellcrank, and push-pull tube for condition, operation, and security. Check cables for tension, routing, fraying, corrosion, and turnbuckle safety. Check travels if cables require tension adjustment or if stops are damaged.		
206	144	Elevator downspring system		
H	145	Elevator Downspring - Check structure, bolts, linkage, bellcrank, and push-pull tube for condition, operation, and security. Check cables for tension, routing, fraying, corrosion, and turnbuckle safety. Check travels if cables require tension adjustment or if stops are damaged.		
ALL	146	Elevator and Elevator Tab. Inspect foam filled elevator trailing edge and foam filled elevator tab for corrosion. **NOTE:** Corrosion Prevention and Control Inspection Item (baseline interval, Refer to appropriate manual for instructions.)		
D,E,F,G	147	Elevator Trim Tab Actuator - Free-Play limits inspection. Refer to appropriate manual for instructions.		
H	148	Elevator Trim Tab Actuator - Examine the free play limits. Refer to appropriate manual for instructions. If the free play is more than the permitted limits, lubricate the actuator and examine the free play limits again. If the free play is still more than the permitted limits, replace the actuator.		
G,H	149	Elevator Trim Tab and Hinges - Check condition, security, and operation.		
G,H	150	Elevator Trim Tab Stop Blocks - Inspect for damage and security.		
G,H	151	Elevator Trim System - Check cables, push-pull rods, bellcranks, pulleys, turnbuckles, fairleads, rub strips, ect. for proper routing, condition, and security.		
H	152	Elevator Trim Control and Indicator - Check freedom of movement and proper operation through full travel. Check pulleys, cables, sprockets, bearings, chains, and turnbuckles for condition and security. Check electric trim controls for operation as applicable. Check cables for tension, routing, fraying, corrosion, and turnbuckle safety.		
G,H	153	Elevator Control - Check freedom of movement and proper operation through full travel.		
G	154	Elevator Control System - Inspect pulleys, cables, sprockets, bearings, chains, and turnbuckles for condition, security, and operation. Check cables for tension, routing, fraying, corrosion, and turnbuckle safety.		
G,H	155	Elevator, Hinges, Stops, and Cable Attachment - Check condition, security, and operation.		
G,H	156	Rudder - Inspect the rudder skins for cracks and loose rivets, rudder hinges for condition, cracks and security; hinge bolts, hinge bearings, hinge attach fittings, and bonding jumper for evidence of damage and wear, failed fasteners, and security. Inspect balance weight for looseness and the supporting structure for damage.		
G,H	157	Rudder - Check internal surfaces for corrosion, condition of fasteners, and balance weight attachment.		
G,H	158	Rudder, Tips, Hinges, Stops, Clips and Cable Attachment - Check condition, security, and operation.		
206,A,B,C,H	159	Rudder Control - Check freedom of movement and proper operation through full travel. Check rudder stops for damage and security.		
ALL	160	Rudder Pedals and Linkage - Check for general condition, proper rigging, and operation. Check for security of attachment.		
206,A,B,C,D,E,F	161	Flap control lever or switch, flap rollers and tracks, flap position transmitter and linkage, flap position indicator, flap electric motor and transmission, actuating cylinders and synchronizing system (as applicable).		
A,B,C,D,E,F	162	Flap motor, transmission, limit switches, structure, linkage, bell cranks etc		
G,H	163	Flap Motor, Actuator, and Limit Switches (electric flaps) – Check wiring and terminals for condition and security. Check actuator for condition and security.		

DOI - CESSNA 206 SERIES - ANNUAL INSPECTIONS

ACFT TYPE		ANNUAL INSPECTION REQUIREMENTS	MECH	INSP
A,B,C,G,H	164	Flap Actuator Threads - Clean and lubricate. Refer to appropriate manual for instructions.		
G,H	165	Flap Structure, Linkage, Bellcranks, Pulleys, and Pulley Brackets – Check for condition operation and security.		
G,H	166	Flaps - Check tracks, rollers, and control rods for security of attachment. Check rod end bearings for corrosion. Check operation.		
G,H	167	Flaps and Cables – check cables for proper tension, routing, fraying, corrosion, and turnbuckle safety. Check travel if cable tension requires adjustment.		
G,H	168	Wing Flap Control – Check operation through full travel and observe Flap Position indicator for proper indication.		
G	169	Aileron, Elevator, and Rudder Stops - Check for damage and security. Compliance with Cessna Service Letter SE80-65 is required.		
G,H	170	Aileron Structure, Control Rods, Hinges, Balance Weights, Bell Cranks, Linkage, Bolts, Pulleys, and Pulley Brackets - Check condition, operation, and security of attachment.		
G,H	171	Aileron controls – Check freedom of movement and proper operation through full travel with and without flaps extended.		
A,B,C	172	Stabilator, trim tab, hinges and push-pull tube		
A,B,C	173	Stabilator trim tab actuator lubrication and tab free-play inspection		
206,A,B,C	174	Fuel tanks, fuel accumulator tank, fuel reservoir tanks, fuel lines, drains, filler caps, and placards		
D,E,F,H	175	Fuel Reservoir - Using quick drain, ensure no contamination exists.		
G	176	Integral Fuel Tanks - Check for evidence of leakage and condition of fuel caps, adapters, and placards.		
D,E,F,G	177	Fuel Tank or Bladder Drains - Drain water and sediment.		
H	178	Integral Fuel Bays - Check for evidence of leakage and condition of fuel caps, adapters, and placards. Using quick drains, ensure no contamination exists. Check quick drains for proper shut off.		
G	179	Fuel Bladders - Check for leaks and security, condition of fuel caps, adapters, and placards.		
206,A,B,C,G,H	180	Fuel System Vent Lines and Vent valves - Check vents for obstruction and proper positioning. Check valves for operation.		
ALL	181	Fuel Selector Valve - Check controls for detent in each position, security of attachment, and for proper placarding.		
H	182	Fuel Selector - Using quick drain, ensure no contamination exists.		
G	183	Fuel Line and Selector Valve Drain(s) – Remove plug and drain.		
206,A,B,C,D,E,F	184	Fuel quantity gages and transmitter units		
206,A,B,C,D,E,F	185	Perform a fuel quantity indicating system operational test. Refer to appropriate manual for instructions.		
G	186	Fuel Quantity Indicators - Check for damage, security of installation, and perform accuracy test.		
ALL	187	Nose gear wheel and wheel bearings – Clean, inspect and lube.		
H	188	Nose Landing Gear Wheel Fairings - Check for cracks, dents, and condition of paint.		
ALL	189	Nose Gear – Inspect and lubricate torque links, steering rods, and boots for condition and security of attachment. Check strut for evidence of leakage and proper extension. Check strut barrel for corrosion, pitting, and cleanliness. Inspect nose landing gear lower trunion fitting. Check shimmy damper and/or bungees for operation, leakage, and attach points for wear and security. (service as required) Inspect fork for cracks, general condition, and security of attachment.		
ALL	190	Nose Gear Attachment Structure – Inspect for cracks, corrosion, or other damage and security of attachment.		
206,A,B,C	191	Main landing gear saddle. Inspect main landing gear saddle for cracks. Refer to appropriate manual for instructions.		

DOI - CESSNA 206 SERIES - ANNUAL INSPECTIONS

ACFT TYPE		ANNUAL INSPECTION REQUIREMENTS	MECH	INSP
ALL	192	Main Wheel Bearings – Clean, inspect and lube.		
ALL	193	Main Landing Gear Attachment Structure – Check for damage, cracks and loose rivets, bolts and nuts and security of attachment.		
ALL Spring Assembly	194	Main Gear Spring Assemblies - Examine for cracks, dents, corrosion, condition of paint or other damage. Examine for chips, scratches, or other damage that lets corrosion get to the steel spring. Examine the axles for condition and security.		
ALL Tubular Struts	195	Main Gear Tubular Struts – Inspect for cracks, dents, corrosion, condition of paint or other damage. Check axles for condition and security.		
ALL	196	Main Landing Gear Wheel Fairings and Brake Fairings - Check for cracks, dents, condition of paint, and correct scraper clearance.		
ALL	197	Wheel fairings, Strut Fairings, Step and Spring Strut and Cuffs – Check for cracks, dents, and condition of paint.		
ALL	198	Brakes and Tires - Check brake pads, disks and hydraulic lines. Check tire treads for wear and cuts. Check tires for proper inflation.		
ALL	199	Brake Lines, Wheel Cylinders, Hoses, Clamps and Fittings – Checks for leaks, condition and security and hoses for bulges and deterioration. Check brake lines for proper routing and support.		
ALL	200	Brakes, Master cylinders, and Parking Brake – Check master cylinders and parking brake mechanism for condition and security. Check fluid level and test operation of the toe and parking brake.		
ALL	201	Windows, Windshield, Doors, and Seals - Inspect general condition. Check latches, hinges, and seals for condition, operation, and security of attachment.		
ALL	202	Heated Windshield Panel - Check operation, security of installation, electrical wiring, and condition of storage bag.		
ALL	203	Portable Hand Fire Extinguisher - Inspect for proper operating pressure, condition, security of installation and servicing date.		
H	203	Cockpit Mounted Halon Type Fire Extinguisher - Weigh bottle. Bottle must be reserviced by qualified individual if more than 2 ounces is lost.		
G,H	204	Vacuum System - Inspect for condition and security.		
G,H	205	Vacuum System Hoses - Inspect for hardness, deterioration, looseness, or collapsed hoses.		
G	206	Vacuum System Air Filter - Inspect for damage, deterioration and contamination. Clean or replace, if required. **NOTE:** Smoking will cause premature filter clogging.		
G	207	Vacuum System Relief Valve - Inspect for condition and security. Replace filter each ANNUALs.		
ALL	208	Instrument, Cabin, Navigation, Beacon, Strobe, and Landing Lights - Check operation, condition of lens, and security of attachment.		
ALL	209	Vacuum Regulator Valve and Filter - Inspect valve assembly for security of installation. Visually inspect filter for damage, deterioration and contamination. Clean or replace if required.		
ALL	210	Oxygen System - Inspect masks, hoses, lines, and fittings for condition, routing, and support. Test operation and check for leaks.		
ALL	211	Inspect each installed miscellaneous item that is not otherwise covered by this listing for improper installation and improper operation.		

DOI - CESSNA 206 SERIES - ANNUAL INSPECTIONS

ZONE	ACFT TYPE		SUPPLEMENTAL ANNUAL INSPECTION REQUIREMENTS	MECH	INSP
ARCTIC	ALL	212	Floats - Inspect as required by OEM ICAs.		
ARCTIC	ALL	213	Skis - Inspect as required by OEM ICAs.		
ARCTIC	ALL	214	De-ice/Anti-ice System - Inspect as required by OEM ICAs.		
ARCTIC		215			
ARCTIC		216			
ARCTIC		217			
ARCTIC		218			
ARCTIC		219			
ARCTIC		220			
ARCTIC		221			
ARCTIC		222			
ARCTIC		223			
ARCTIC		224			
ARCTIC		225			
TEMPERATE	ALL	226	Floats - Inspect as required by OEM ICAs.		
TEMPERATE	ALL	227	Skis - Inspect as required by OEM ICAs.		
TEMPERATE	ALL	228	De-ice/Anti-ice System - Inspect as required by OEM ICAs.		
TEMPERATE		229			
TEMPERATE		230			
TEMPERATE		231			
TEMPERATE		232			
TEMPERATE		233			
TEMPERATE		234			
TEMPERATE		235			
TEMPERATE		236			
TEMPERATE		237			
TEMPERATE		238			
TEMPERATE		239			
TEMPERATE		240			
	ALL	241	All panels opened for the inspection are closed and secure.		
	ALL	242	Run aircraft engine and leak check.		

DOI - CESSNA 206 SERIES - ANNUAL INSPECTIONS

NOTES:

ASSURE PROPER MAINTENANCE RECORD ENTRIES HAVE BEEN MADE IAW 14 CFR 43.9

THE AIRCRAFT RECORDS CONSIST OF THE FOLLOWING;

1. AIRCRAFT, ENGINE & PROPELLER HARD LOGS.
2. ALL FORM 337'S, MAJOR REPAIR & ALTERATION.
3. COMPLIANCE LIST OF ALL PERTINENT AIRWORTHINESS DIRECTIVES.
4. MAINTENANCE SCHEDULE- LIST OF REQUIRED SPECIAL INSPECTIONS, COMPONENT OVERHAUL & TIME-LIFE LIMITS.
5. CURRENT & HISTORICAL WEIGHT & BALANCE STATUS & EQUIPMENT LIST
6. MINIMUM EQUIPMENT LIST AS REQUIRED.
7. SPECIAL FLIGHT AUTHORIZATIONS AND/OR SUPPLEMENTS

UNITED STATES DEPARTMENT OF THE INTERIOR

CESSNA 206 SERIES

500 HOUR SCHEDULED MAINTENANCE CHECKS

THE INSPECTION WORK SHEETS / PACKAGES IN THIS DOCUMENT ARE FOR THE 'UNITED STATES DEPARTMENT OF THE INTERIOR' AIRCRAFT ONLY.

Inspection Sheet - Block Explanation

Example

ACFT TYPE		EXAMPLE INSPECTION REQUIREMENTS	MECH	INSP
ALL	1	Engine - Inspect for evidence of oil and fuel leaks. Wash engine/engine compartment if needed.		
H	2	Idle and Mixture Adjustment - Check idle speed and idle mixture (lean rise). Adjust if necessary.		
A,B,C,D,E,F	3	Turbocharger pressurized vent lines to fuel pump, discharge nozzles and fuel flow gage.	N/A	
A	**B**	**C**	**D**	**E**

Block A All - All Cessna aircraft in the 206 Series (all models).

Other than 'All' designated with the specific 206 model.

Block B Each inspection and task is given a line item number in the 2nd column.

Block C Describes inspection tasks.

Block D Mechanic sign-off block. N/A (Not Applicable) - should be used if the inspection cannot or should not be carried out due to (but not limited to) - 1. Serial number range. 2. Unit or option not installed on aircraft. 3. Previously complied with. 4. Climate zone applicability. A note beside the N/A to indicate the reason for it is recommended.

Block E The (white) INSP block should be initialed by an inspector who witnessed the task carried out by the mechanic and completed a final inspection and/or functional check in accordance with the line item requirements and relevant technical publications. The inspector shall not initial the INSP block until after the mechanic has initialed the MECH block. In a block that requires a Maintenance Inspector, he shall initial the white INSP block whenever N/A has been entered in the MECH block.

Climate Zone Supplemental Inspections and Servicing

Before commencing inspection and servicing, it must be confirmed which climate zone the subject aircraft is operated in. If the aircraft is above the 49th parallel it is in the Arctic Zone. If the aircraft is below the 49th parallel it is in the Temperate zone. The extra line items listed for the appropriate climate zone shall be added to the servicing, the not applicable climate zone line items shall be noted as N/A in the sign-off block.

Inspections: To be completed in accordance with this manual.

Repairs: To be completed in accordance with the appropriate Cessna Maintenance Manual.

Acronyms in use

IAW - In Accordance With

CPCP - Corrosion Prevention and Control Program

NDI - Non Destructive Inspection

ICA - Instructions for Continued Airworthiness

STC - Supplemental Type Certificate

PSE - Principle Structural Element

N/A - Not Applicable (see MECH Block D above)

OEM - Original Equipment Manufacturer

DOI - CESSNA 206 SERIES - 500 HOUR INSPECTION

'N' NUMBER:_____ MODEL: _____ AIRCRAFT S/N:_____

TACH HOURS:_____ AIRCRAFT TOTAL TIME:_____ ENG. SMOH:_____ PROP SMOH:_____

ACFT TYPE		**500 HOUR INSPECTION REQUIREMENTS**	MECH	INSP
206,A,B,C,D,E,F,G	1	Generator or Alternator - Check brushes, leads, commutator or slip ring for wear.		
ALL	2	Magneto breaker compartment - Refer to appropriate manufacurers manual.		
ALL	3	Magnetos - Timing Procedures and intervals, lubrication, and overhaul procedures. a. Inspect contact points for condition and adjust or replace as required. b. Inspect carbon brush, high-tension lead, and distributive block for condition. Clean or replace parts as required. c. Inspect impulse coupling and pawls for condition and replace as required. Use light pressure only. Do not force when checking pawls. d. Inspect and lubricate bearings; replace as required. e. Lubricate contact point cam. The magnetos must be overhauled or replaced with new or rebuilt magnetos at every engine overhaul.		
ALL	4	Autopilot Rigging - Refer to Autopilot - Maintenance Practices.		
206,A,B,C,D,E,F,H	5	Gyro Air Filter - Replace		
G	6	Vacuum System Air Filter - Replace		

DOI - CESSNA 206 SERIES - 500 HOUR INSPECTION

ZONE	ACFT TYPE		SUPPLEMENTAL 500 HOUR INSPECTION REQUIREMENTS	MECH	INSP
ARCTIC	ALL	5	Floats - Inspect as required by OEM ICAs.		
ARCTIC	ALL	6	Skis - Inspect as required by OEM ICAs.		
ARCTIC	ALL	7	De-ice/Anti-ice System - Inspect as required by OEM ICAs.		
ARCTIC		8			
ARCTIC		9			
ARCTIC		10			
ARCTIC		11			
ARCTIC		12			
ARCTIC		13			
ARCTIC		14			
ARCTIC		15			
ARCTIC		16			
ARCTIC		17			
ARCTIC		18			
TEMPERATE	ALL	19	Floats - Inspect as required by OEM ICAs.		
TEMPERATE	ALL	20	Skis - Inspect as required by OEM ICAs.		
TEMPERATE	ALL	21	De-ice/Anti-ice System - Inspect as required by OEM ICAs.		
TEMPERATE		22			
TEMPERATE		23			
TEMPERATE		24			
TEMPERATE		25			
TEMPERATE		26			
TEMPERATE		27			
TEMPERATE		28			
TEMPERATE		29			
TEMPERATE		30			
TEMPERATE		31			
TEMPERATE		32			
TEMPERATE		33			
	ALL	34	All panels opened for the inspection are closed and secure.		
	ALL	35	Run aircraft engine and leak check.		

DOI - CESSNA 206 SERIES - 500 HOUR INSPECTIONS

NOTES:

UNITED STATES DEPARTMENT OF THE INTERIOR

CESSNA 206 SERIES

1000 HOUR SCHEDULED MAINTENANCE CHECKS

THE INSPECTION WORK SHEETS / PACKAGES IN THIS DOCUMENT ARE FOR THE 'UNITED STATES DEPARTMENT OF THE INTERIOR' AIRCRAFT ONLY.

Inspection Sheet - Block Explanation

Example

ACFT TYPE		EXAMPLE INSPECTION REQUIREMENTS	MECH	INSP
ALL	1	Engine - Inspect for evidence of oil and fuel leaks. Wash engine/engine compartment if needed.		
H	2	Idle and Mixture Adjustment - Check idle speed and idle mixture (lean rise). Adjust if necessary.		
A,B,C,D,E,F	3	Turbocharger pressurized vent lines to fuel pump, discharge nozzles and fuel flow gage.	N/A	
A	**B**	**C**	**D**	**E**

Block A All - All Cessna aircraft in the 206 Series (all models).

Other than 'All' designated with the specific 206 model.

Block B Each inspection and task is given a line item number in the 2nd column.

Block C Describes inspection tasks.

Block D Mechanic sign-off block. N/A (Not Applicable) - should be used if the inspection cannot or should not be carried out due to (but not limited to) - 1. Serial number range. 2. Unit or option not installed on aircraft. 3. Previously complied with. 4. Climate zone applicability. A note beside the N/A to indicate the reason for it is recommended.

Block E The (white) INSP block should be initialed by an inspector who witnessed the task carried out by the mechanic and completed a final inspection and/or functional check in accordance with the line item requirements and relevant technical publications. The inspector shall not initial the INSP block until after the mechanic has initialed the MECH block. In a block that requires a Maintenance Inspector, he shall initial the white INSP block whenever N/A has been entered in the MECH block.

Climate Zone Supplemental Inspections and Servicing

Before commencing inspection and servicing, it must be confirmed which climate zone the subject aircraft is operated in. If the aircraft is above the 49th parallel it is in the Arctic Zone. If the aircraft is below the 49th parallel it is in the Temperate zone. The extra line items listed for the appropriate climate zone shall be added to the servicing, the not applicable climate zone line items shall be noted as N/A in the sign-off block.

Inspections: To be completed in accordance with this manual.

Repairs: To be completed in accordance with the appropriate Cessna Maintenance Manual.

Acronyms in use

IAW - In Accordance With

CPCP - Corrosion Prevention and Control Program

NDI - Non Destructive Inspection

ICA - Instructions for Continued Airworthiness

STC - Supplemental Type Certificate

PSE - Principle Structural Element

N/A - Not Applicable (see MECH Block D above)

OEM - Original Equipment Manufacturer

DOI - CESSNA 206 SERIES - 1000 HOUR INSPECTION

'N' NUMBER:_____ MODEL: _____ AIRCRAFT S/N:_____

TACH HOURS:_____ AIRCRAFT TOTAL TIME:_____ ENG. SMOH:_____ PROP SMOH:_____

ACFT TYPE		**1000 HOUR INSPECTION REQUIREMENTS**	MECH	INSP
A,B,C	1	Turbocharger		
A,B,C	2	Waste gate, actuator and linkage, and controller		
H	3	Autopilot Servo Capstan Assemblies. Check slip-clutch torque settings. Refer to Autopilot - Maintenance Practices.		
H	4	Autopilot Servo Actuators. Inspect for evidence of corrosion and or buildup of dirt or other particulate matter which may interfere with servo operation. Refer to Autopilot - Maintenance Practices.		
H	5	Inspect and lubricate ACS brand ignition switch. Refer to appropriate manual for instructions.		
G	6	Integral Fuel Tanks - Drain fuel and check tank interior and outlet screens.		
G	7	Fuel Bladders - Drain fuel and check for wrinkles that would retain contaminants or liquid, and security of attachment and condition of outlet screens.		
H	8	Integral Fuel Bays - Drain the fuel and purge the tanks. Refer to appropriate manual for instructions. Complete an inspection of the tank interior and outlet screens and remove any foreign object debris. Complete an inspection of the tank interior surfaces for sealant deterioration and corrosion (especially in the sump areas).		
206,A,B,C,D,E,F	9	Drain fuel and check tank interior, attachment and outlet screens		
H	10	Fuel Quantity Indication System Check (Airplanes without Garmin G1000) - Examine for damage and correct installation. Complete a Fuel Quantity Calibration and Check. Refer to appropriate manual for instructions.		
H	11	Fuel Quantity Indication System Check (Airplanes with Garmin G1000) - Examine for damage and correct installation. Complete a Fuel Quantity System Check. Refer to appropriate manual for instructions.		
206,A,B,C	12	Calibrate magnetic compass.		
206,D,E,F	13	Vacuum Relief Valve Screen/Filter - Replace.		

DOI - CESSNA 206 SERIES - 1000 HOUR INSPECTION

ZONE	ACFT TYPE		SUPPLEMENTAL 1000 HOUR INSPECTION REQUIREMENTS	MECH	INSP
ARCTIC	ALL	13	Floats - Inspect as required by OEM ICAs.		
ARCTIC	ALL	14	Skis - Inspect as required by OEM ICAs.		
ARCTIC	ALL	15	De-ice/Anti-ice System - Inspect as required by OEM ICAs.		
ARCTIC		16			
ARCTIC		17			
ARCTIC		18			
ARCTIC		19			
ARCTIC		20			
ARCTIC		21			
ARCTIC		22			
ARCTIC		23			
ARCTIC		24			
ARCTIC		25			
ARCTIC		26			
TEMPERATE	ALL	27	Floats - Inspect as required by OEM ICAs.		
TEMPERATE	ALL	28	Skis - Inspect as required by OEM ICAs.		
TEMPERATE	ALL	29	De-ice/Anti-ice System - Inspect as required by OEM ICAs.		
TEMPERATE		30			
TEMPERATE		31			
TEMPERATE		32			
TEMPERATE		33			
TEMPERATE		34			
TEMPERATE		35			
TEMPERATE		36			
TEMPERATE		37			
TEMPERATE		38			
TEMPERATE		39			
TEMPERATE		40			
TEMPERATE		41			
	ALL	42	All panels opened for the inspection are closed and secure.		
	ALL	43	Run aircraft engine and leak check.		

DOI - CESSNA 206 SERIES - 1000 HOUR INSPECTIONS

NOTES:

ASSURE PROPER MAINTENANCE RECORD ENTRIES HAVE BEEN MADE IAW 14 CFR 43.9

THE AIRCRAFT RECORDS CONSIST OF THE FOLLOWING;

1. AIRCRAFT, ENGINE & PROPELLER HARD LOGS.
2. ALL FORM 337'S, MAJOR REPAIR & ALTERATION.
3. COMPLIANCE LIST OF ALL PERTINENT AIRWORTHINESS DIRECTIVES.
4. MAINTENANCE SCHEDULE- LIST OF REQUIRED SPECIAL INSPECTIONS, COMPONENT OVERHAUL & TIME-LIFE LIMITS.
5. CURRENT & HISTORICAL WEIGHT & BALANCE STATUS & EQUIPMENT LIST
6. MINIMUM EQUIPMENT LIST AS REQUIRED.
7. SPECIAL FLIGHT AUTHORIZATIONS AND/OR SUPPLEMENTS

UNITED STATES DEPARTMENT OF THE INTERIOR

CESSNA 206 SERIES

2 YEAR SCHEDULED MAINTENANCE CHECKS

THE INSPECTION WORK SHEETS / PACKAGES IN THIS DOCUMENT ARE FOR THE 'UNITED STATES DEPARTMENT OF THE INTERIOR' AIRCRAFT ONLY.

Inspection Sheet - Block Explanation

Example

ACFT TYPE		EXAMPLE INSPECTION REQUIREMENTS	MECH	INSP
ALL	1	Engine - Inspect for evidence of oil and fuel leaks. Wash engine/engine compartment if needed.		
H	2	Idle and Mixture Adjustment - Check idle speed and idle mixture (lean rise). Adjust if necessary.		
A,B,C,D,E,F	3	Turbocharger pressurized vent lines to fuel pump, discharge nozzles and fuel flow gage.	N/A	
A	**B**	**C**	**D**	**E**

Block A All - All Cessna aircraft in the 206 Series (all models).

Other than 'All' designated with the specific 206 model.

Block B Each inspection and task is given a line item number in the 2nd column.

Block C Describes inspection tasks.

Block D Mechanic sign-off block. N/A (Not Applicable) - should be used if the inspection cannot or should not be carried out due to (but not limited to) - 1. Serial number range. 2. Unit or option not installed on aircraft. 3. Previously complied with. 4. Climate zone applicability. A note beside the N/A to indicate the reason for it is recommended.

Block E The (white) INSP block should be initialed by an inspector who witnessed the task carried out by the mechanic and completed a final inspection and/or functional check in accordance with the line item requirements and relevant technical publications. The inspector shall not initial the INSP block until after the mechanic has initialed the MECH block. In a block that requires a Maintenance Inspector, he shall initial the white INSP block whenever N/A has been entered in the MECH block.

Climate Zone Supplemental Inspections and Servicing

Before commencing inspection and servicing, it must be confirmed which climate zone the subject aircraft is operated in. If the aircraft is above the 49th parallel it is in the Arctic Zone. If the aircraft is below the 49th parallel it is in the Temperate zone. The extra line items listed for the appropriate climate zone shall be added to the servicing, the not applicable climate zone line items shall be noted as N/A in the sign-off block.

Inspections: To be completed in accordance with this manual.

Repairs: To be completed in accordance with the appropriate Cessna Maintenance Manual.

Acronyms in use

IAW - In Accordance With

CPCP - Corrosion Prevention and Control Program

NDI - Non Destructive Inspection

ICA - Instructions for Continued Airworthiness

STC - Supplemental Type Certificate

PSE - Principle Structural Element

N/A - Not Applicable (see MECH Block D above)

OEM - Original Equipment Manufacturer

DOI - CESSNA 206 SERIES - 2 YEAR INSPECTION

'N' NUMBER:_____ MODEL: _____ AIRCRAFT S/N:_____

TACH HOURS:_____ AIRCRAFT TOTAL TIME:_____ ENG. SMOH:_____ PROP SMOH:_____

ACFT TYPE		**2 YEAR INSPECTION REQUIREMENTS**	MECH	INSP
H	1	Alternator Control Unit - Complete the Over-voltage Protection Circuit Test. Refer to appropriate manual for instructions.		
G	2	Airspeed indicator, Vertical Speed Indicator, and Magnetic Compass - Calibrate.		
G	3	Altimeter and Static System - Inspect in accordance with 14 CFR Part 91.411.		
H	4	Pitot and Static System - Examine in accordance with 14 CFR Part 91.411.		
D,E,F,H	5	Magnetic Compass - Calibrate		

DOI - CESSNA 206 SERIES - 2 YEAR INSPECTION

ZONE	ACFT TYPE		SUPPLEMENTAL 2 YEAR INSPECTION REQUIREMENTS	MECH	INSP
ARCTIC	ALL	6	Floats - Inspect as required by OEM ICAs.		
ARCTIC	ALL	7	Skis - Inspect as required by OEM ICAs.		
ARCTIC	ALL	8	De-ice/Anti-ice System - Inspect as required by OEM ICAs.		
ARCTIC		9			
ARCTIC		10			
ARCTIC		11			
ARCTIC		12			
ARCTIC		13			
ARCTIC		14			
ARCTIC		15			
ARCTIC		16			
ARCTIC		17			
ARCTIC		18			
ARCTIC		19			
TEMPERATE	ALL	20	Floats - Inspect as required by OEM ICAs.		
TEMPERATE	ALL	21	Skis - Inspect as required by OEM ICAs.		
TEMPERATE	ALL	22	De-ice/Anti-ice System - Inspect as required by OEM ICAs.		
TEMPERATE		23			
TEMPERATE		24			
TEMPERATE		25			
TEMPERATE		26			
TEMPERATE		27			
TEMPERATE		28			
TEMPERATE		29			
TEMPERATE		30			
TEMPERATE		31			
TEMPERATE		32			
TEMPERATE		33			
TEMPERATE		34			
	ALL	35	All panels opened for the inspection are closed and secure.		
	ALL	36	Run aircraft engine and leak check.		

DOI - CESSNA 206 SERIES - 2 YEAR INSPECTIONS

NOTES:

ASSURE PROPER MAINTENANCE RECORD ENTRIES HAVE BEEN MADE IAW 14 CFR 43.9

THE AIRCRAFT RECORDS CONSIST OF THE FOLLOWING;

1. AIRCRAFT, ENGINE & PROPELLER HARD LOGS.
2. ALL FORM 337'S, MAJOR REPAIR & ALTERATION.
3. COMPLIANCE LIST OF ALL PERTINENT AIRWORTHINESS DIRECTIVES.
4. MAINTENANCE SCHEDULE- LIST OF REQUIRED SPECIAL INSPECTIONS, COMPONENT OVERHAUL & TIME-LIFE LIMITS.
5. CURRENT & HISTORICAL WEIGHT & BALANCE STATUS & EQUIPMENT LIST
6. MINIMUM EQUIPMENT LIST AS REQUIRED.
7. SPECIAL FLIGHT AUTHORIZATIONS AND/OR SUPPLEMENTS

UNITED STATES DEPARTMENT OF THE INTERIOR

CESSNA 206 SERIES

3 YEAR SCHEDULED MAINTENANCE CHECKS

THE INSPECTION WORK SHEETS / PACKAGES IN THIS DOCUMENT ARE FOR THE 'UNITED STATES DEPARTMENT OF THE INTERIOR' AIRCRAFT ONLY.

Inspection Sheet - Block Explanation

Example

ACFT TYPE		EXAMPLE INSPECTION REQUIREMENTS	MECH	INSP
ALL	1	Engine - Inspect for evidence of oil and fuel leaks. Wash engine/engine compartment if needed.		
H	2	Idle and Mixture Adjustment - Check idle speed and idle mixture (lean rise). Adjust if necessary.		
A,B,C,D,E,F	3	Turbocharger pressurized vent lines to fuel pump, discharge nozzles and fuel flow gage.	N/A	
A	**B**	**C**	**D**	**E**

Block A All - All Cessna aircraft in the 206 Series (all models).

Other than 'All' designated with the specific 206 model.

Block B Each inspection and task is given a line item number in the 2nd column.

Block C Describes inspection tasks.

Block D Mechanic sign-off block. N/A (Not Applicable) - should be used if the inspection cannot or should not be carried out due to (but not limited to) - 1. Serial number range. 2. Unit or option not installed on aircraft. 3. Previously complied with. 4. Climate zone applicability. A note beside the N/A to indicate the reason for it is recommended.

Block E The (white) INSP block should be initialed by an inspector who witnessed the task carried out by the mechanic and completed a final inspection and/or functional check in accordance with the line item requirements and relevant technical publications. The inspector shall not initial the INSP block until after the mechanic has initialed the MECH block. In a block that requires a Maintenance Inspector, he shall initial the white INSP block whenever N/A has been entered in the MECH block.

Climate Zone Supplemental Inspections and Servicing

Before commencing inspection and servicing, it must be confirmed which climate zone the subject aircraft is operated in. If the aircraft is above the 49th parallel it is in the Arctic Zone. If the aircraft is below the 49th parallel it is in the Temperate zone. The extra line items listed for the appropriate climate zone shall be added to the servicing, the not applicable climate zone line items shall be noted as N/A in the sign-off block.

Inspections: To be completed in accordance with this manual.

Repairs: To be completed in accordance with the appropriate Cessna Maintenance Manual.

Acronyms in use

IAW - In Accordance With

CPCP - Corrosion Prevention and Control Program

NDI - Non Destructive Inspection

ICA - Instructions for Continued Airworthiness

STC - Supplemental Type Certificate

PSE - Principle Structural Element

N/A - Not Applicable (see MECH Block D above)

OEM - Original Equipment Manufacturer

DOI - CESSNA 206 SERIES - 3 YEAR INSPECTION

'N' NUMBER:_____ MODEL: _____ AIRCRAFT S/N:_____

TACH HOURS:_____ AIRCRAFT TOTAL TIME:_____ ENG. SMOH:_____ PROP SMOH:_____

ACFT TYPE		3 YEAR INSPECTION REQUIREMENTS	MECH	INSP
H	1	Fuel Quantity Indication System Check (Airplanes without Garmin G1000) - Examine for damage and correct installation. Complete a Fuel Quantity Calibration and Check. Refer to appropriate manual for instructions.		
H	2	Fuel Quantity Indication System Check (Airplanes with Garmin G1000) - Examine for damage and correct installation. Complete a Fuel Quantity System Check. Refer to appropriate manual for instructions.		
G	3	Main Landing Gear Structure – Check for damage, cracks, loose rivets, bolts and nuts and security of attachment.		
H	4	Oxygen Cylinder (if applicable) - Inspect for condition, check hydrostatic test date and perform hydrostatic test, if due.		

DOI - CESSNA 206 SERIES - 3 YEAR INSPECTION

ZONE	ACFT TYPE		SUPPLEMENTAL 3 YEAR INSPECTION REQUIREMENTS	MECH	INSP
ARCTIC	ALL	5	Floats - Inspect as required by OEM ICAs.		
ARCTIC	ALL	6	Skis - Inspect as required by OEM ICAs.		
ARCTIC	ALL	7	De-ice/Anti-ice System - Inspect as required by OEM ICAs.		
ARCTIC		8			
ARCTIC		9			
ARCTIC		10			
ARCTIC		11			
ARCTIC		12			
ARCTIC		13			
ARCTIC		14			
ARCTIC		15			
ARCTIC		16			
ARCTIC		17			
ARCTIC		18			
TEMPERATE	ALL	19	Floats - Inspect as required by OEM ICAs.		
TEMPERATE	ALL	20	Skis - Inspect as required by OEM ICAs.		
TEMPERATE	ALL	21	De-ice/Anti-ice System - Inspect as required by OEM ICAs.		
TEMPERATE		22			
TEMPERATE		23			
TEMPERATE		24			
TEMPERATE		25			
TEMPERATE		26			
TEMPERATE		27			
TEMPERATE		28			
TEMPERATE		29			
TEMPERATE		30			
TEMPERATE		31			
TEMPERATE		32			
TEMPERATE		33			
	ALL	34	All panels opened for the inspection are closed and secure.		
	ALL	35	Run aircraft engine and leak check.		

DOI - CESSNA 206 SERIES - 3 YEAR INSPECTIONS

NOTES:

ASSURE PROPER MAINTENANCE RECORD ENTRIES HAVE BEEN MADE IAW 14 CFR 43.9

THE AIRCRAFT RECORDS CONSIST OF THE FOLLOWING;

1. AIRCRAFT, ENGINE & PROPELLER HARD LOGS.
2. ALL FORM 337'S, MAJOR REPAIR & ALTERATION.
3. COMPLIANCE LIST OF ALL PERTINENT AIRWORTHINESS DIRECTIVES.
4. MAINTENANCE SCHEDULE- LIST OF REQUIRED SPECIAL INSPECTIONS, COMPONENT OVERHAUL & TIME-LIFE LIMITS.
5. CURRENT & HISTORICAL WEIGHT & BALANCE STATUS & EQUIPMENT LIST
6. MINIMUM EQUIPMENT LIST AS REQUIRED.
7. SPECIAL FLIGHT AUTHORIZATIONS AND/OR SUPPLEMENTS

UNITED STATES
DEPARTMENT OF THE INTERIOR

CESSNA 206 SERIES

5-14-00

SCHEDULED STRUCTURAL CHECKS

VOL 2 OF 2

Includes Cessna 206 Models: 206
U206,A,B,C,D,E,F,G
TU206A,B,C,D,E
P206,A,B,C,D,E
TP206A,B,C,D
206H
T206H

NOTE: THE INSPECTION WORK SHEETS / PACKAGES IN THIS DOCUMENT ARE FOR THE 'UNITED STATES DEPARTMENT OF THE INTERIOR' AIRCRAFT ONLY.

DOI - CESSNA 206 SERIES
RECORD OF REVISIONS

REVISION No.	PAGE NUMBER	ISSUE DATE	INSERTION DATE	INSERTED BY	REMOVAL DATE	REMOVED BY

DOI - CESSNA 206 SERIES
RECORD OF TEMPERARY REVISIONS

REVISION No.	PAGE NUMBER	ISSUE DATE	INSERTION DATE	INSERTED BY	REMOVAL DATE	REMOVED BY
DOITR-206-SIM-01	ALL	5/4/2016	5/4/2016	DOI	5/4/2016	DOI

UNITED STATES DEPARTMENT OF THE INTERIOR

CESSNA 206 SERIES
STRUCTURAL INSPECTIONS
TEMPORARY REVISIONS

TEMPORARY REVISION DOITR-206-SIM-01

REASON FOR ISSUE: This Temporary Revision removed SID references and added IAW acronym and definition.

FILING INSTRUCTION:

Ensure that all previous revisions have been incorporated.

Remove and destroy

TITLE	PAGE NUMBER	REVIVSION	DATE
Structural Maintenance Instructions	2	Rev. 00	5/4/2016
Structural Maintenance 2 Yr.	1	Rev. 00	5/4/2016
Structural Maintenance 3 Yr.	1	Rev. 00	5/4/2016
Structural Maintenance 5 Yr.	1	Rev. 00	5/4/2016
Structural Maintenance 500 Hr.	1	Rev. 00	5/4/2016
Structural Maintenance 1000 Hr.	1	Rev. 00	5/4/2016
Structural Maintenance 3000 Hr.	1	Rev. 00	5/4/2016

Insert attached new

TITLE	PAGE NUMBER	REVIVSION	DATE
Structural Maintenance Instructions	2	DOITR-206-SIM-01	5/4/2016
Structural Maintenance 2 Yr.	1	DOITR-206-SIM-01	5/4/2016
Structural Maintenance 3 Yr.	1	DOITR-206-SIM-01	5/4/2016
Structural Maintenance 5 Yr.	1	DOITR-206-SIM-01	5/4/2016
Structural Maintenance 500 Hr.	1	DOITR-206-SIM-01	5/4/2016
Structural Maintenance 1000 Hr.	1	DOITR-206-SIM-01	5/4/2016
Structural Maintenance 3000 Hr.	1	DOITR-206-SIM-01	5/4/2016

NOTE: Record the incorporation of this Temporary Revision on the RECORD OF TEMPORARY REVISIONS sheet at the front of the Manual.

This temporary revision/amendment complies with the USDOI Department of Interior Inspection Program requirements.

ISSUED BY: USDOI - Office of Aviation Services
Fleet Manager
300 E. Mallard Dr. Suite 200
Boise, Idaho 83706-3991

Signed: Brian Gu

Date: 6/27/2016

INSTRUCTIONS

DOI – CESSNA 206 SERIES – SCHEDULED STRUCTURAL CHECKS

THE INSPECTION WORK SHEETS / PACKAGES IN THIS DOCUMENT ARE FOR THE
'UNITED STATES DEPARTMENT OF THE INTERIOR' AIRCRAFT ONLY.

Explanation of Terms

Scheduled Structural Checks

2 Year Inspection	Every 2 Years		
3 Year Inspection	Every 3 Years		
5 Year Inspection	Every 5 Years	Includes	Inspection > 5 Years
500 Hr. Inspection	Every 500 Hrs.		
1000 Hr. Inspection	Every 1000 Hrs.		
3000 Hr. Inspection	Every 3000 Hrs.	Includes	Inspection > 3,000 Hrs.

Inspection Intervals

Hourly: All required inspections may be completed up to +10% percent of their due time (i.e.: A 50 hour inspection may be completed between 50 and 55 hours time in service). Flight beyond the due time must be approved by the administrator. Flight beyond the 10 % limit is not permitted for any reason.

All inspections shall be done at the next standard interval (i.e.: 50hrs) from when the previous inspection was due provided that inspection was completed within the +10% time due. The 50 hr. check is due at 50 hrs. and the next is due at 100hrs. All inspections will be handled as described above. The +10% is to be used primarily for ferry flights to where maintenance can be performed.

Calendar: All required inspections may be completed up to their calendar due time. Flight beyond the calendar time is not permitted for any reason.

Note: Selected items that are normally controlled separately (on computer) (i.e.: overhauls, component function checks, etc.) have been omitted from this inspection work package and must be controlled separately. See computerized maintenance program for “Controlled Items”.

Note: This inspection package must be updated as new revisions to the maintenance program are issued.

Inspections: To be completed in accordance with this manual.

Repairs: To be completed in accordance with the appropriate Cessna Maintenance Manual.

Acronyms in use

IAW -	In Accordance With	STC -	Supplemental Type Certificate
CPCP -	Corrosion Prevention and Control Program	PSE -	Principle Structural Element
NDI -	Non Destructive Inspection	N/A -	Not Applicable (see MECH Block D on next page)
ICA -	Instructions for Continued Airworthiness	OEM -	Original Equipment Manufacturer

Inspection Sheet - Block Explanation

Example

ACFT TYPE		EXAMPLE INSPECTION REQUIREMENTS	MECH	INSP
ALL	1	Engine - Inspect for evidence of oil and fuel leaks. Wash engine/engine compartment if needed.		
H	2	Idle and Mixture Adjustment - Check idle speed and idle mixture (lean rise). Adjust if necessary.		
A,B,C,D,E,F	3	Turbocharger pressurized vent lines to fuel pump, discharge nozzles and fuel flow gage.	N/A	
A	**B**	**C**	**D**	**E**

Block A All - All Cessna aircraft in the 206 Series (all models).

Other than 'All' designated with the specific 206 model.

Block B Each inspection and task is given a line item number in the 2nd column.

Block C Describes inspection tasks.

Block D Mechanic sign-off block. N/A (Not Applicable) - should be used if the inspection cannot or should not be carried out due to (but not limited to) - 1. Serial number range. 2. Unit or option not installed on aircraft. 3. Previously complied with. 4. Climate zone applicability. A note beside the N/A to indicate the reason for it is recommended.

Block E The (white) INSP block should be initialed by an inspector who witnessed the task carried out by the mechanic and completed a final inspection and/or functional check in accordance with the line item requirements and relevant technical publications. The inspector shall not initial the INSP block until after the mechanic has initialed the MECH block. In a block that requires a Maintenance Inspector, he shall initial the white INSP block whenever N/A has been entered in the MECH block.

INSPECTION MANUAL ORIGINAL

UNITED STATES DEPARTMENT OF THE INTERIOR

CESSNA 206 SERIES

2 YEAR STRUCTURAL MAINTENANCE CHECKS

THE INSPECTION WORK SHEETS / PACKAGES IN THIS DOCUMENT ARE FOR THE 'UNITED STATES DEPARTMENT OF THE INTERIOR' AIRCRAFT ONLY.

Inspection Sheet - Block Explanation

Example

ACFT TYPE		EXAMPLE INSPECTION REQUIREMENTS	MECH	INSP
ALL	1	Engine - Inspect for evidence of oil and fuel leaks. Wash engine/engine compartment if needed.		
H	2	Idle and Mixture Adjustment - Check idle speed and idle mixture (lean rise). Adjust if necessary.		
A,B,C,D,E,F	3	Turbocharger pressurized vent lines to fuel pump, discharge nozzles and fuel flow gage.	N/A	
A	**B**	**C**	**D**	**E**

Block A All - All Cessna aircraft in the 206 Series (all models).

Other than 'All' designated with the specific 206 model.

Block B Each inspection and task is given a line item number in the 2nd column.

Block C Describes inspection tasks.

Block D Mechanic sign-off block. N/A (Not Applicable) - should be used if the inspection cannot or should not be carried out due to (but not limited to) - 1. Serial number range. 2. Unit or option not installed on aircraft. 3. Previously complied with. 4. Climate zone applicability. A note beside the N/A to indicate the reason for it is recommended.

Block E The (white) INSP block should be initialed by an inspector who witnessed the task carried out by the mechanic and completed a final inspection and/or functional check in accordance with the line item requirements and relevant technical publications. The inspector shall not initial the INSP block until after the mechanic has initialed the MECH block. In a block that requires a Maintenance Inspector, he shall initial the white INSP block whenever N/A has been entered in the MECH block.

Climate Zone Supplemental Inspections and Servicing

Before commencing inspection and servicing, it must be confirmed which climate zone the subject aircraft is operated in. If the aircraft is above the 49th parallel it is in the Arctic Zone. If the aircraft is below the 49th parallel it is in the Temperate zone. The extra line items listed for the appropriate climate zone shall be added to the servicing, the not applicable climate zone line items shall be noted as N/A in the sign-off block.

Inspections: To be completed in accordance with this manual.

Repairs: To be completed in accordance with the appropriate Cessna Maintenance Manual.

Acronyms in use

IAW - In Accordance With

CPCP - Corrosion Prevention and Control Program

NDI - Non Destructive Inspection

ICA - Instructions for Continued Airworthiness

STC - Supplemental Type Certificate

PSE - Principle Structural Element

N/A - Not Applicable (see MECH Block D above)

OEM - Original Equipment Manufacturer

DOI - CESSNA 206 SERIES - 2 YEAR STRUCTURAL INSPECTION

'N' NUMBER:_____ MODEL: _____ AIRCRAFT S/N:_____

TACH HOURS:_____ AIRCRAFT TOTAL TIME:_____ ENG. SMOH:_____ PROP SMOH:_____

ACFT TYPE		2 YEAR STRUCTURAL INSPECTION REQUIREMENTS	MECH	INSP
ALL	1	Aileron attachments. Make sure you inspect these areas: 1. Aileron hinges. 2. Hinge bolts, 3. Hinge bearings. 4. Hinge and pushrod support structure. **NOTE:** Corrosion Prevention and Control Inspection Item. Refer to appropriate manual for instructions. **NOTE:** Do not apply LPS-3 Heavy Duty Rust Inhibitor on hinge bearing.		
ALL	2	Elevator trim system. Make sure you inspect these areas: 1. Elevator trim brackets. 2. Actuator support brackets and bearings. 3. Pulleys and attaching structure. **NOTE:** Corrosion Prevention and Control Inspection Item. Refer to appropriate manual for instructions. **NOTE:** Do not apply LPS-3 Heavy Duty Rust Inhibitor on hinge bearing.		
ALL	3	Rudder attachments. Make sure you inspect these areas: 1. Hinge brackets. 2. Hinge bolts. 3. Hinge bearings. **NOTE:** Corrosion Prevention and Control Inspection Item. Refer to appropriate manual for instructions. **NOTE:** Do not apply LPS-3 Heavy Duty Rust Inhibitor on hinge bearing.		
ALL	4	Rudder structure. Make sure you inspect these areas: 1. Skin. 2. Forward and aft spars at hinge locations. **NOTE:** Corrosion Prevention and Control Inspection Item. Refer to appropriate manual for instructions.		
ALL	5	Inspect flap tracks for corrosion. Complete inspection as instructed below.		

TITLE	Flap Tracks Corrosion Inspection

EFFECTIVITY	**206 S/N**		
	20608001 and On	P206-0001 thru P206-0160	U206-0276 thru U206-0437
	T20608001 and On	P206-0161 thru P206-0519	U206-0438 thru U206-1234
		P206-0520 thru P20600647	U206-1235 thru U20603521
			U206-3522 thru U20607020

PURPOSE	To ensure the integrity of the flap tracks.

		MECH	INSP
INSPECTION INSTRUCTIONS	A. Check aircraft records to verify that SEB95-3 has been incorporated. If not, complete SEB95-3 with this inspection.		
	B. Visually inspect the inboard and outboard flap tracks for exfoliation corrosion, particularly along exterior edges and edges of roller tracks. Refer to the figure below.		
	(1) Clean area before inspecting if grime or debris is present.		
	C. Visually inspect the flap tracks rib assembly, attachment brackets and angles for condition, cracks, loose rivets and security.		
	D. Visually inspect the flap structure for any sign of cracked/broken ribs.		

ACCESS AND DETECTABLE CRACK SIZE

ACCESS/LOCATION	DETECTABLE CRACK SIZE
Flaps and Flap Tracks	Not Allowed

INSPECTION METHOD	Visual

		MECH	INSP
REPAIR AND MODIFICATION	Replace damaged flap tracks or attachments. Replace damaged or loose rivets.		

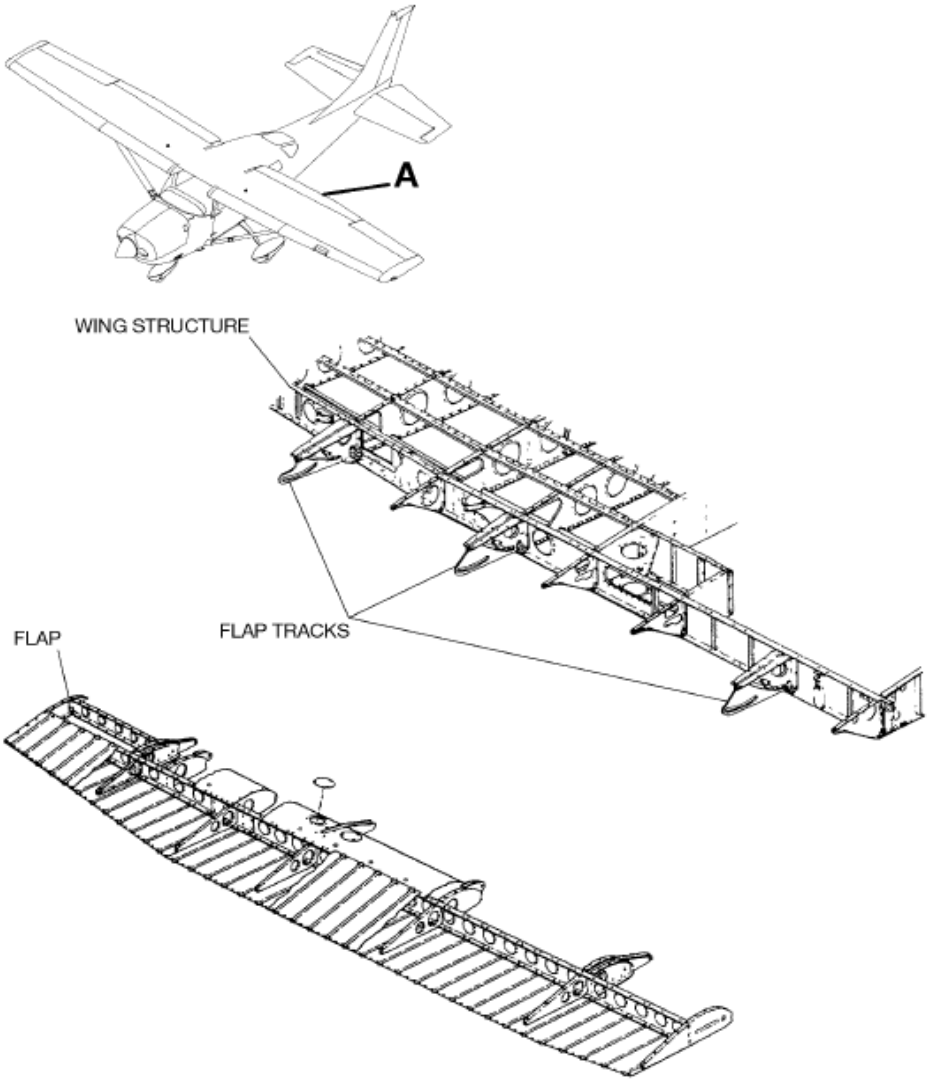

DETAIL A

MODEL 206 FLAP TRACKS CORROSION INSPECTION

DOI - CESSNA 206 SERIES - 2 YEAR STRUCTURAL INSPECTION

ZONE	ACFT TYPE		2 YEAR STRUCTURAL INSPECTION REQUIREMENTS	MECH	INSP
ARCTIC		6			
ARCTIC		7			
ARCTIC		8			
ARCTIC		9			
ARCTIC		10			
ARCTIC		11			
ARCTIC		12			
ARCTIC		13			
ARCTIC		14			
ARCTIC		15			
ARCTIC		16			
ARCTIC		17			
ARCTIC		18			
ARCTIC		19			
TEMPERATE		20			
TEMPERATE		21			
TEMPERATE		22			
TEMPERATE		23			
TEMPERATE		24			
TEMPERATE		25			
TEMPERATE		26			
TEMPERATE		27			
TEMPERATE		28			
TEMPERATE		29			
TEMPERATE		30			
TEMPERATE		31			
TEMPERATE		32			
TEMPERATE		33			
TEMPERATE		34			
	ALL	35	All panels opened for the inspection are closed and secure.		
	ALL	36	Run aircraft engine and leak check.		

DOI - CESSNA 206 SERIES - 2 YEAR STRUCTURAL INSPECTION

NOTES:

ASSURE PROPER MAINTENANCE RECORD ENTRIES HAVE BEEN MADE IAW 14 CFR 43.9

THE AIRCRAFT RECORDS CONSIST OF THE FOLLOWING;

1. AIRCRAFT, ENGINE & PROPELLER HARD LOGS.
2. ALL FORM 337'S, MAJOR REPAIR & ALTERATION.
3. COMPLIANCE LIST OF ALL PERTINENT AIRWORTHINESS DIRECTIVES.
4. MAINTENANCE SCHEDULE- LIST OF REQUIRED SPECIAL INSPECTIONS, COMPONENT OVERHAUL & TIME-LIFE LIMITS.
5. CURRENT & HISTORICAL WEIGHT & BALANCE STATUS & EQUIPMENT LIST
6. MINIMUM EQUIPMENT LIST AS REQUIRED.
7. SPECIAL FLIGHT AUTHORIZATIONS AND/OR SUPPLEMENTS

UNITED STATES DEPARTMENT OF THE INTERIOR

CESSNA 206 SERIES

3 YEAR STRUCTURAL MAINTENANCE CHECKS

THE INSPECTION WORK SHEETS / PACKAGES IN THIS DOCUMENT ARE FOR THE 'UNITED STATES DEPARTMENT OF THE INTERIOR' AIRCRAFT ONLY.

Inspection Sheet - Block Explanation

Example

ACFT TYPE		EXAMPLE INSPECTION REQUIREMENTS	MECH	INSP
ALL	1	Engine - Inspect for evidence of oil and fuel leaks. Wash engine/engine compartment if needed.		
H	2	Idle and Mixture Adjustment - Check idle speed and idle mixture (lean rise). Adjust if necessary.		
A,B,C,D,E,F	3	Turbocharger pressurized vent lines to fuel pump, discharge nozzles and fuel flow gage.	N/A	
A	**B**	**C**	**D**	**E**

Block A All - All Cessna aircraft in the 206 Series (all models).

Other than 'All' designated with the specific 206 model.

Block B Each inspection and task is given a line item number in the 2nd column.

Block C Describes inspection tasks.

Block D Mechanic sign-off block. N/A (Not Applicable) - should be used if the inspection cannot or should not be carried out due to (but not limited to) - 1. Serial number range. 2. Unit or option not installed on aircraft. 3. Previously complied with. 4. Climate zone applicability. A note beside the N/A to indicate the reason for it is recommended.

Block E The (white) INSP block should be initialed by an inspector who witnessed the task carried out by the mechanic and completed a final inspection and/or functional check in accordance with the line item requirements and relevant technical publications. The inspector shall not initial the INSP block until after the mechanic has initialed the MECH block. In a block that requires a Maintenance Inspector, he shall initial the white INSP block whenever N/A has been entered in the MECH block.

Climate Zone Supplemental Inspections and Servicing

Before commencing inspection and servicing, it must be confirmed which climate zone the subject aircraft is operated in. If the aircraft is above the 49th parallel it is in the Arctic Zone. If the aircraft is below the 49th parallel it is in the Temperate zone. The extra line items listed for the appropriate climate zone shall be added to the servicing, the not applicable climate zone line items shall be noted as N/A in the sign-off block.

Inspections: To be completed in accordance with this manual.

Repairs: To be completed in accordance with the appropriate Cessna Maintenance Manual.

Acronyms in use

IAW - In Accordance With

CPCP - Corrosion Prevention and Control Program

NDI - Non Destructive Inspection

ICA - Instructions for Continued Airworthiness

STC - Supplemental Type Certificate

PSE - Principle Structural Element

N/A - Not Applicable (see MECH Block D above)

OEM - Original Equipment Manufacturer

DOI - CESSNA 206 SERIES - 3 YEAR STRUCTURAL INSPECTION

'N' NUMBER:_____ MODEL: _____ AIRCRAFT S/N:_____

TACH HOURS:_____ AIRCRAFT TOTAL TIME:_____ ENG. SMOH:_____ PROP SMOH:_____

ACFT TYPE		3 YEAR STRUCTURAL INSPECTION REQUIREMENTS	MECH	INSP
ALL	1	Nose gear trunnion, steering assembly, torque link assembly, nose gear fork and axle. Make sure you inspect these areas: 1. Nose gear trunnion surface. 2. Steering collar and steering collar attach bolt. 3. Torque links, torque link attach pins, and attach bolts. 4. Nose gear fork. 5. Nose gear axle. 5. Nose gear axle. **NOTE:** Corrosion Prevention and Control Inspection Item. Refer to appropriate manual for instructions.		
ALL	2	Inspect nose gear trunnion, torque link assembly, and nose gear fork. Make sure you inspect these areas: 1. Nose gear trunnion upper and lower inner bore surface and bearing. 2. Torque link bolt and attach pin inner bore surface. 3. Nose gear fork lug inner bore surface. **NOTE:** Corrosion Prevention and Control Inspection Item. Refer to appropriate manual for instructions.		
ALL	3	Nose landing gear outer barrel assembly. Make sure you inspect these areas: 1. Outer barrel assembly. 2. Upper strut end and lower collar assembly. **NOTE:** Corrosion Prevention and Control Inspection Item. Refer to appropriate manual for instructions. **NOTE:** do not apply LPS-3 Heavy Duty Rust Inhibitor to the sliding surfaces of the oleo strut.		
D,E,F,G,H	4	Inspect main landing gear axle assembly. Make sure you inspect these areas: 1. Main gear axle and attach bolts. 2. Wheel halves. **NOTE:** Corrosion Prevention and Control Program Inspection Item. **NOTE:** Do not apply LPS-3 Heavy Duty Rust Inhibitor to the bearing. **NOTE:** Coordinate with tire change.		
D,E,F,G	5	Elevator Trim Tab Actuator - Clean, lubricate, and check for free-play. Refer to appropriate manual for instructions.		
H	6	Elevator Trim Tab Actuator - Remove, clean, examine, and lubricate the actuator. Refer to appropriate manual for instructions.		
H	7	Elevator trim system. 1. Inspect elevator trim brackets and actuator support brackets. 2. Inspect pulleys, attaching structure and fasteners. Complete inspection as instructed below.		
TITLE		Elevator Trim Pulley Bracket and Actuator Bracket Structure Inspection		

EFFECTIVITY	**206 S/N**	
	20608001 and On	T20608001 and On

PURPOSE	To verify the integrity of the elevator trim pulley brackets and the actuator support brackets.		
		MECH	INSP
INSPECTION INSTRUCTIONS	A. Remove the inspection panel adjacent to the trim tab actuator to get access to the actuator support hardware. Refer to appropriate manual for instructions.		
	B. Remove seats, floor covering and floor inspection panels as necessary to inspect elevator trim pulley brackets and actuator support brackets for cracks, corrosion and bent flanges. Straighten bent flanges and check for any cracking, using at least a 4x power magnifying glass and a bright light. Refer to the figure below.		
	(1) Clean area before inspecting if grime or debris is present.		
	C. Inspect all pulleys for wear, flat spots and freedom of rotation.		
	D. Inspect all fasteners and attaching structure for integrity.		
	E. Review the airplane maintenance records to verify that service bulletins SB00–55–02 and SB10–27–01 have been complied with for the applicable airplane serial numbers. For affected airplane serial numbers that are not in compliance with SB00–55–02 and SB10–27–01, comply with these service bulletins concurrent with this inspection.		

	MECH	INSP
F. Install all items removed for this inspection, refer to the applicable sections of this manual.		

ACCESS AND DETECTABLE CRACK SIZE

ACCESS/LOCATION	DETECTABLE CRACK SIZE
Stabilizer	Not Allowed

INSPECTION METHOD	Visual

		MECH	INSP
REPAIR AND MODIFICATION	Replace any cracked or excessively corroded (10% or more of the material thickness is missing in the corroded section) brackets. Replace excessively worn, flat spotted or stiff pulleys. Straighten bent pulley brackets and actuator brackets with finger pressure and inspect for cracking. Replace any loose or sheared fasteners. Make repairs in accordance with applicable Chapter(s) of the Single Engine Structural Repair Manual. Coordinate any repair not available in Single Engine Structural Repair Manual with Cessna Customer Service prior to beginning the repair.		

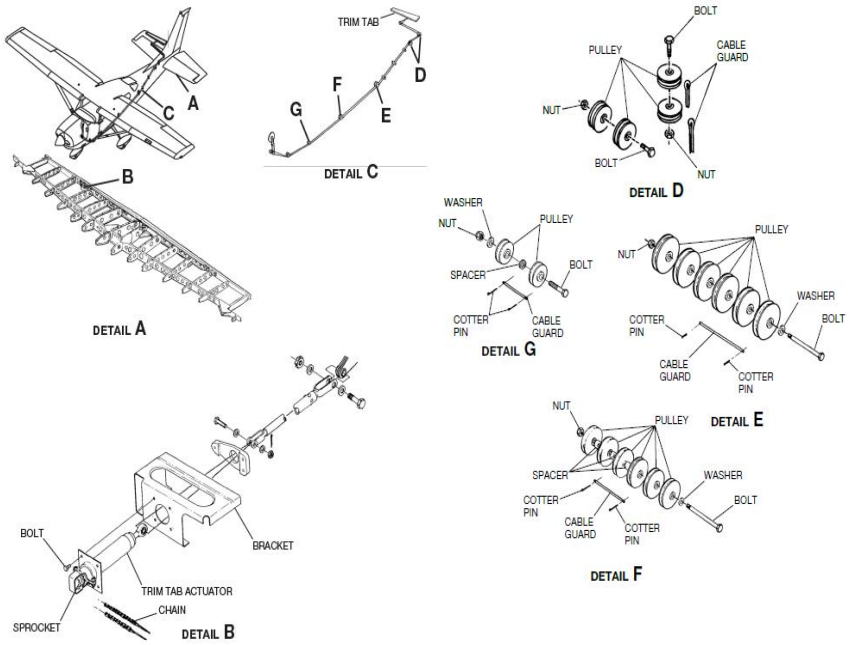

ACFT TYPE		3 YEAR STRUCTURAL INSPECTION REQUIREMENTS	MECH	INSP
A,B,C	8	Inspect wing root rib. Complete inspection as instructed below.		
TITLE		Wing Root Rib Corrosion Inspection		

	206 S/N	
EFFECTIVITY	P206-0161 thru P206-0519	U206-0438 thru U206-1234

PURPOSE	To verify the integrity of the wing root ribs.

		MECH	INSP
INSPECTION INSTRUCTIONS	A. Remove the wing to fuselage fairing. Refer to the applicable Model 200 Series Service Manual.		
	(1) Clean areas before inspecting if dirt or debris are present.		
	B. Visually inspect inboard side of root ribs for corrosion		
	(1) at WS 25.25 on aircraft with cantilevered wing.		
	(2) at WS 23.53 on aircraft without cantilevered wing.		
	C. Visually inspect outboard side of root ribs for corrosion		

		MECH	INSP
	(1) at WS 25.25 on aircraft with cantilevered wing.		
	(2) at WS 23.53 on aircraft without cantilevered wing.		
	D. Repair any corroded areas in accordance with REPAIR/MODIFICATION below.		
	E. Install the wing to fuselage fairing and inspection cover. Refer to appropriate manual for instructions.		

ACCESS AND DETECTABLE CRACK SIZE

ACCESS/LOCATION	DETECTABLE CRACK SIZE
Root Rib	N/A

INSPECTION METHOD	Visual

		MECH	INSP
REPAIR AND MODIFICATION	A. If corroded, sand corroded area lightly to remove corrosion. If corrosion is found on the outboard side of the rib, it may be necessary to provide additional access in the leading edge skin. Contact Cessna Customer Service for instructions for cut and repair.		
	B. Clean area thoroughly to assess remaining thickness.		
	C. If more than 20% of the thickness has been removed in any area, replace the rib. Up to 20% is acceptable if confined to an area of 2 inches or less in length, and less than one square inch in area.		
	D. Brush coat sanded areas with alodine		

ACFT TYPE		3 YEAR INSPECTION REQUIREMENTS	MECH	INSP
206	9	Inspect wing root rib. Complete inspection as instructed below.		
TITLE		Wing Root Rib Corrosion Inspection		

	206 S/N		
EFFECTIVITY	206-0001 thru 206-0275	P206-0001 thru P206-0160	U206-0276 thru U206-0437

PURPOSE	To verify the integrity of the wing root ribs.

		MECH	INSP
INSPECTION INSTRUCTIONS	A. Remove the wing to fuselage fairing. Refer to appropriate manual for instructions.		
	B. Clean areas before inspecting if dirt or debris are present.		
	C. Visually inspect inboard side of root ribs for corrosion at WS 23.53.		
	D. Visually inspect outboard side of root ribs for corrosion at WS 23.53.		
	E. Repair any corroded areas in accordance with REPAIR/MODIFICATION section below.		
	F. Install the wing to fuselage fairing and inspection cover. Refer to appropriate manual for instructions.		

ACCESS AND DETECTABLE CRACK SIZE

ACCESS/LOCATION	DETECTABLE CRACK SIZE
Root Rib	N/A

INSPECTION METHOD	Visual

		MECH	INSP
REPAIR AND MODIFICATION	A. If corroded, sand corroded area lightly to remove corrosion. If corrosion is found on the outboard side of the rib, it may be necessary to provide additional access in the leading edge skin. Contact Cessna Customer Service for instructions for cut and repair.		
	B. Clean area thoroughly to assess remaining thickness.		

		MECH	INSP
	C. If more than 20% of the thickness has been removed in any area, replace the rib. Up to 20% is acceptable if confined to an area of 2 inches or less in length, and less than one square inch in area.		
	D. Brush coat sanded areas with alodine.		

ACFT TYPE		3 YEAR INSPECTION REQUIREMENTS	MECH	INSP
D,E,F,G,H	10	Inspect wing root rib. Complete inspection as instructed below.		
TITLE		Wing Root Rib Corrosion Inspection		

	206 S/N		
EFFECTIVITY	20608001 and On	P206-0520 thru P20600647	U206-1235 thru U20603521
	T20608001 and On		U206-3522 thru U20607020

PURPOSE	To ensure structural integrity of the root rib structure.

		MECH	INSP
INSPECTION INSTRUCTIONS	A. Remove the wing to fuselage fairing. Refer to appropriate manual for instructions.		
	B. Visually inspect inboard side of root ribs at WS 23.625 for corrosion.		
	(1) Clean area before inspecting if grime or debris is present.		
	C. Remove the inspection cover outboard of WS 23.625.		
	D. Visually inspect outboard side of root ribs at WS 23.625 for corrosion.		
	(1) Clean area before inspecting if grime or debris is present.		
	E. Repair any corroded areas in accordance with the Repair/Modification section below.		
	F. Install the wing to fuselage fairing and inspection cover. Refer to appropriate manual for instructions.		

ACCESS AND DETECTABLE CRACK SIZE

ACCESS/LOCATION	DETECTABLE CRACK SIZE
Root Rib	Not Allowed

INSPECTION METHOD	Visual

		MECH	INSP
REPAIR AND MODIFICATION	A. If corroded, sand corroded area lightly to remove corrosion. If corrosion is found on the outboard side of the rib, it may be necessary to provide additional access in the leading edge skin. Contact Cessna Customer Service for instructions for cut and repair.		
	B. Clean area thoroughly to assess remaining thickness.		
	C. If more than 20% of the thickness has been removed in any area, replace the rib. Up to 20% is acceptable if confined to an area of 2 inches or less in length, and less than one square inch in area.		
	D. Brush coat sanded areas with alodine.		

ACFT TYPE		3 YEAR INSPECTION REQUIREMENTS	MECH	INSP
ALL	11	Inspect the aileron hinges, hinge bolts, hinge bearings, and hinge and pushrod attach fittings. Complete inspection as instructed below.		
TITLE		Aileron Support Structure Inspection		

	206 S/N		
EFFECTIVITY	206-0001 thru 206-0275	P206-0001 thru P206-0160	U206-0276 thru U206-0437
	20608001 and On	P206-0161 thru P206-0519	U206-0438 thru U206-1234
	T20608001 and On	P206-0520 thru P20600647	U206-1235 thru U20603521
			U206-3522 thru U20607020

DOI - CESSNA 206 SERIES - 3 YEAR STRUCTURAL INSPECTION

PURPOSE	To ensure structural integrity of the Aileron Support Structure.

		MECH	INSP
INSPECTION INSTRUCTIONS	A. Remove the ailerons. Refer to appropriate manual for instructions.		
	B. Visually inspect the aileron hinges for condition, cracks and security; hinge bolts, hinge bearings for condition and security; bearings for freedom of rotation; hinge and pushrod attach fittings for evidence of damage, wear, failed fasteners and security, refer to the figure below.		
	(1) Clean area before inspecting if grime or debris is present.		
	(2) Pay particular attention to the lower single rivet tabs that attach the hinge brackets to the wings.		
	(3) Inspect for defects in the rear spar that are evidenced by looseness and movement of the hinge brackets in the up-and-down direction.		
	(a) If the hinge brackets are found to have excessive movement remove the false spar for a more detailed inspection.		
	C. If any hinge bearings are found frozen or extremely stiff, inspect aileron hinge fittings for cracks using surface eddy current. Refer to appropriate manual for instructions.		
	NOTE: The inspection is for the aluminum structure outside of the bearing, make sure the instrument is set for aluminum material prior to starting the Eddy Current inspection.		
	D. Install the items that were removed to accomplish this inspection. Refer to appropriate manual for instructions.		

ACCESS AND DETECTABLE CRACK SIZE

ACCESS/LOCATION	DETECTABLE CRACK SIZE
Wings	Not Allowed

INSPECTION METHOD	Visual with Surface Eddy Current if required.

		MECH	INSP
REPAIR AND MODIFICATION	Replace any damaged or cracked fittings. Replace damaged hinge bolts. Replace loose, corroded or excessively tight bearings. Replace damaged (cracked) hinge brackets. Make repairs the appropriate manual. Coordinate any repair not available in the manual with Cessna Customer Service prior to beginning the repair.		

Figure 1. Aileron Support Structure Inspection

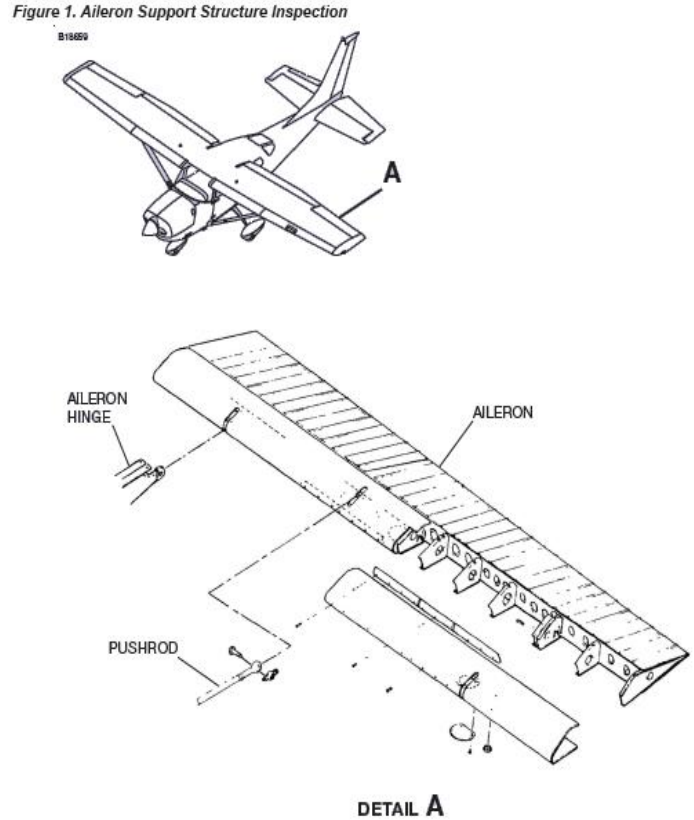

DOI - CESSNA 206 SERIES - 3 YEAR STRUCTURAL INSPECTION

ACFT TYPE		3 YEAR INSPECTION REQUIREMENTS	MECH	INSP
206,A,B,C,D,E,F,G	12	Inspect fuselage upper and lower forward doorposts. Complete inspection as instructed below.		
TITLE		Fuselage Forward Doorpost Inspection		

	206 S/N	
EFFECTIVITY	U206-0276 thru U206-0437	U206-1235 thru U20603521
	U206-0438 thru U206-1234	U206-3522 thru U20607020

PURPOSE	To verify integrity of the fuselage lower forward doorpost and left upper forward doorpost.

		MECH	INSP
INSPECTION INSTRUCTIONS	A. Review the aircraft records to determine if Service Kit SK206-41 has been installed. If it has been installed, proceed to D below.		
	NOTE: If there is any doubt about the installation of SK206-41, inspect the area parallel to lower LH side of the windshield. If there is a stiffener installed on the inside windshield retainer, then the service kit has been installed. Refer to the figure below, Detail A and View B-B. If the stiffener has not been installed, proceed to the inspection below.		
	B. Remove the left cabin door by pulling the hinge pins. Remove upholstery panels and shields as required to gain access to left upper doorpost.		
	C. Using a flashlight and inspection mirror, visually inspect doorpost for cracks across a line parallel to the lower edge of the windshield. Refer to the figure below, Detail B.		
	(1) Clean area before inspecting if grime or debris is present.		
	D. Review the aircraft records to determine if Service Kit SK206-42 has been installed. If it has, inspection is complete.		
	NOTE: If there is any doubt about the installation of SK206-42, inspect the forward and aft side of the front doorpost bulkhead assembly where the wing strut fitting installs. If there is a channel installed on the forward side of the wing strut fitting that extends approximately 7 inches inboard under the upper flange of the front doorpost bulkhead and if on the aft side of the front doorpost bulkhead a web reinforcement has been installed opposite to the wing strut fitting then the service kit has been installed. Refer to the figure below. If the service kit has not been installed, proceed to the inspection below.		
	E. Pull back the upholstery covering the front and right floorboards at the intersection of the forward doorpost and floor.		
	F. Remove and retain the upholstery and heater ducts on both sides at the bottom of the forward left and right doorposts. The critical inspection area must be fully exposed.		
	G. Remove floorboard inspection covers in areas fore and aft of doorpost.		
	H. Refer to the figure below, Detail D. Using a flashlight and inspection mirror, visually inspect areas shown for cracks. If there are cracks present, they should be visible at the intersection of the doorpost and the forward doorpost bulkhead. Look for cracks that follow the contour of the wing strut support fitting.		
	(1) Clean area before inspecting if grime or debris is present.		

ACCESS AND DETECTABLE CRACK SIZE

ACCESS/LOCATION	DETECTABLE CRACK SIZE
Fuselage, Front doorpost	Not Allowed

INSPECTION METHOD	Visual

		MECH	INSP
REPAIR AND MODIFICATION	A. If the lower forward doorpost bulkhead is cracked, it may be repaired according to Service Bulletin SEB93-5 or as listed below.		
	(1) Obtain Cessna Service Kit SK206-42.		
	(2) Install the Service Kit in accordance with the included instructions.		
	B. If cracks are present on the left upper doorpost, it may be repaired according to Service Bulletin SEB93-4.		

DOI - CESSNA 206 SERIES - 3 YEAR STRUCTURAL INSPECTION

	MECH	INSP
(1) Obtain Cessna Service Kit SK206-41.		
(2) Install the Service Kit in accordance with the included instructions.		

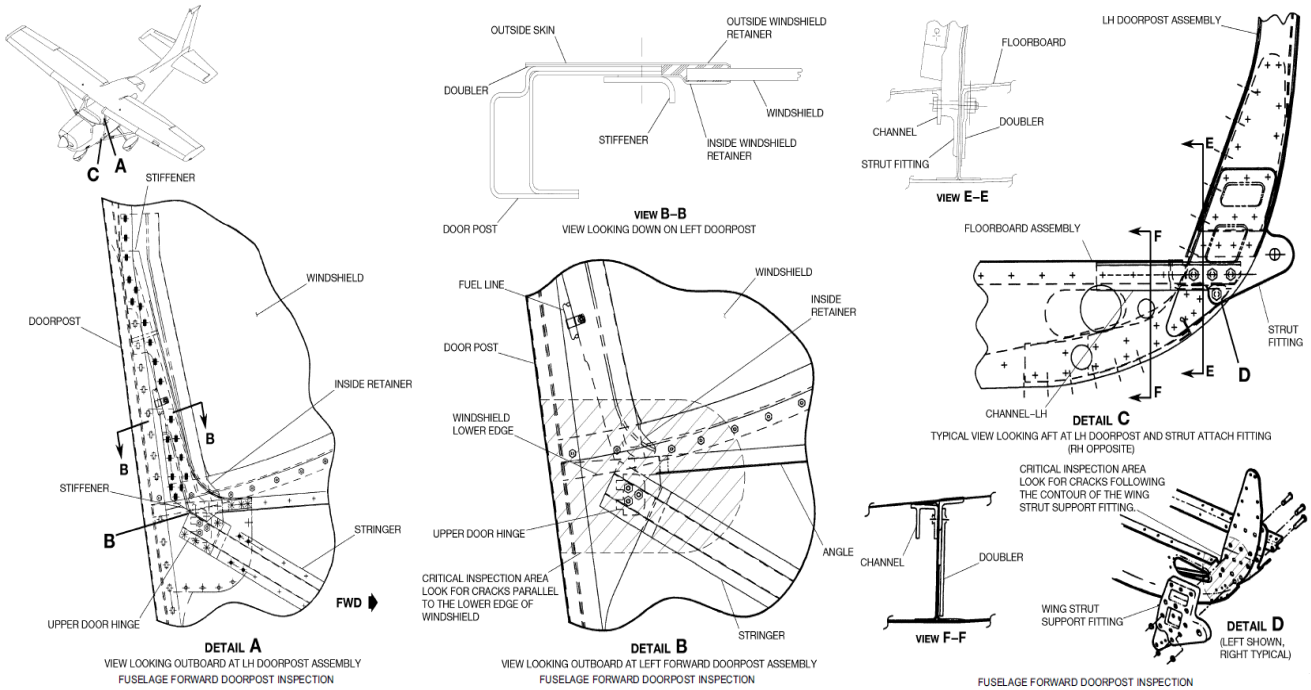

ACFT TYPE		3 YEAR INSPECTION REQUIREMENTS	MECH	INSP
ALL	13	1. Inspect inboard wing structure for damage and working rivets. 2. Inspect flap actuator support structure. Complete inspection as instructed below.		
TITLE		Wing Structure Inspection		

	206 S/N		
EFFECTIVITY	206-0001 thru 206-0275	P206-0001 thru P206-0160	U206-0276 thru U206-0437
	20608001 and On	P206-0161 thru P206-0519	U206-0438 thru U206-1234
	T20608001 and On	P206-0520 thru P20600647	U206-1235 thru U20603521
			U206-3522 thru U20607020

		MECH	INSP
PURPOSE	To ensure structural integrity of the wing.		
INSPECTION INSTRUCTIONS	A. Remove all access panels, fairings and the wing tips from the wings. Refer to appropriate manual for instructions.		
	B. Visual Inspection		
	(1) Clean the area before inspecting if grime or debris is present.		
	(2) Do a visual inspection of the wing structure for damage, corroded or cracked parts. Use a borescope or magnifying glass where required.		
	(a) Pay particular attention to the wing attach area. Visually inspect both the fuselage and wing where the wing attaches to the carry-thru spar in the fuselage, refer to the figure below.		
	(b) Visually inspect for working rivets at the inboard portion of the main wing spar.		
	NOTE: Working rivets will have a trail of black dust downwind from the fastener. The dust is oxidized aluminum produced by the fastener moving in the hole.		
	(c) Visually inspect for working Hi-Shear rivets at the inboard spar fittings on the main wing spar.		

	MECH	INSP
(d) Pay particular attention to the trailing edge ribs and the span wise segments supporting the flap actuator or flap bell cranks.		
(e) For units 2060001 thru 2060215, P2060001 thru P2060160, P206-0161 thru P206-0519, U206-0438 thru U206-1234, P206-0059 thru P206-0597 and U206-1235 thru U206-1367, closely inspect the rear spar with a 4X magnifying device for cracks at the root attach area and the upper flange of the rear spar channel at the outer end of the attach fitting. Where doubt exists, remove the trailing edge root rib for a more detailed inspection.		
(3) If the flight hours meet or exceed the inspection compliance hours (above), proceed to Detail Inspection below.		
(4) If crack(s) or corrosion is found at the wing attach fittings proceed to the Detailed Inspection below.		
(5) If no crack(s) or corrosion is found and the aircraft flight hours are below the inspection compliance hours (above) install access panels, fairings and wing tips. Inspection is complete.		
C. Detailed Inspection.		
(1) Support the wing outboard of the strut while removing attach bolts.		
(2) Remove the wing front spar attach bolts. Visually inspect the holes on the wing and fuselage sides of the fitting and surrounding area for corrosion.		
(a) Pay particular attention to potential corrosion in the fitting inside the fuselage front carry-thru spar.		
(b) Conduct a bolt hole eddy current inspection of the front spar attach fittings. Refer to appropriate manual for instructions. The hole size is 0.50 inches in diameter.		
NOTE: With the front spar in position, there are three segments through the hole. There is a fabrication joint in the center segment (wing side), so expect a crack-like indication at about 2:00 and 10:00 o'clock positions. Indications caused by the fabrication joint are not a cause for rejection.		
(c) Install the front spar attach bolt.		
(3) Remove the wing rear spar attach bolts. Mark the location of the indexing slot in the heads of both eccentric bushings. Remove the bushings. Visually inspect the holes and surrounding area for corrosion.		
(a) Pay particular attention to potential corrosion in the fitting inside the fuselage rear carry-thru spar. Refer to the figure below.		
(b) Conduct a bolt hole eddy current inspection of the rear spar attach fittings. Refer to appropriate manual for instructions. The bolt hole size on the fitting-wing attaching is 0.438 inches in diameter while the bolt hole size for both forward and aft fittings on fuselage side is 0.687 inches in diameter.		
(c) Install the bushings in the spar in the same orientation as they were when removed.		
(d) Install the rear spar attach bolt.		
(4) Install the items that were removed to accomplish this inspection, refer to the applicable sections of this manual.		

ACCESS AND DETECTABLE CRACK SIZE

ACCESS/LOCATION	DETECTABLE CRACK SIZE
Wing Attach Points	Not Allowed

INSPECTION METHOD	Visual, Eddy Current, Borescope, Magnifying Glass

		MECH	INSP
REPAIR AND MODIFICATION	Replace cracked or excessively corroded parts (10% or more of the material thickness is missing in the corroded section). If corrosion is present, it must be removed before refinishing. Contact Customer Service for assistance prior to beginning the repair if the disassembly exceeds the repair facilities experience or capability.		

DOI - CESSNA 206 SERIES - 3 YEAR STRUCTURAL INSPECTION

Figure 1. Wing Structure Inspection

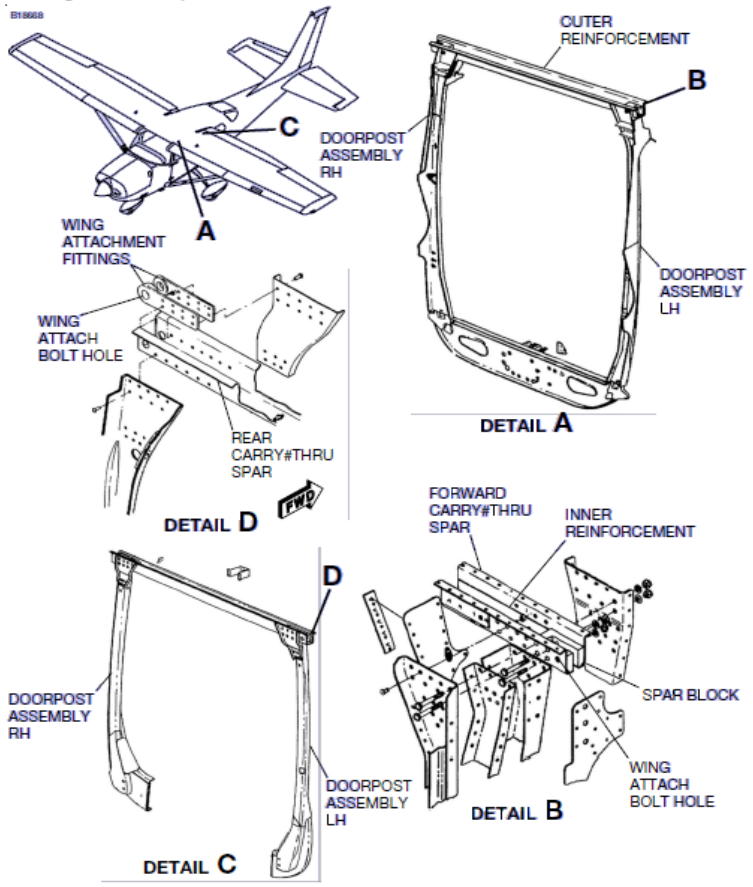

Sheet 1 of 1

ACFT TYPE		3 YEAR INSPECTION REQUIREMENTS	MECH	INSP
206	14	Inspect front spar and attachments. Complete inspection as instructed below.		
TITLE		Wing Front Spar Inspection		

EFFECTIVITY	**206 S/N**		
	206-0001 thru 206-0275	P206-0001 thru P206-0160	U206-0276 thru U206-0437

PURPOSE	To ensure structural integrity of the wing front spar.

		MECH	INSP
INSPECTION INSTRUCTIONS	A. Remove the wing root fairings. Refer to appropriate manual for instructions.		
	B. If the flight hours meet or exceed the inspection compliance hours (above), proceed to Detailed Attach Fitting Inspection.		
	C. Visual Attach Fitting Inspection		
	(1) Visually inspect the front spar attachment area for cracks or corrosion.		
	(a) Clean area before inspecting if grime or debris are present.		
	(b) If cracks or corrosion are found, proceed to Detailed Attach Fitting Inspection.		
	(c) If no cracks or corrosion are found, install fairings. The inspection is complete.		
	D. Detailed Attach Fitting Inspection		

DOI - CESSNA 206 SERIES - 3 YEAR STRUCTURAL INSPECTION

	MECH	INSP
(1) Support the wing. Refer to appropriate manual for instructions.		
(2) Remove a front spar attach bolt (remove one at a time, replace the first before removing the second) and conduct a bolt hole eddy current inspection for cracks around the wing attachment hole. Refer to appropriate manual for instructions.		
(a) Clean area before inspecting if grime or debris are present.		
NOTE: Use a brass or nonmetallic hammer to start the bolt from the hole if required. Use a slide hammer with a 9/16 or 3/8 inch diameter claw to complete the bolt removal.		
(3) Visually inspect the area around the bolts for deformation of wing attachment holes. Check for surface cracks or surface corrosion in the vicinity of the bolts.		
(4) Replace wing and fairings after the inspection. Refer to appropriate manual for instructions.		

ACCESS AND DETECTABLE CRACK SIZE

ACCESS/LOCATION	DETECTABLE CRACK SIZE
Front spar	Not Allowed

INSPECTION METHOD	Visual, Eddy Current

		MECH	INSP
REPAIR AND MODIFICATION	Replace cracked or excessively corroded parts.		

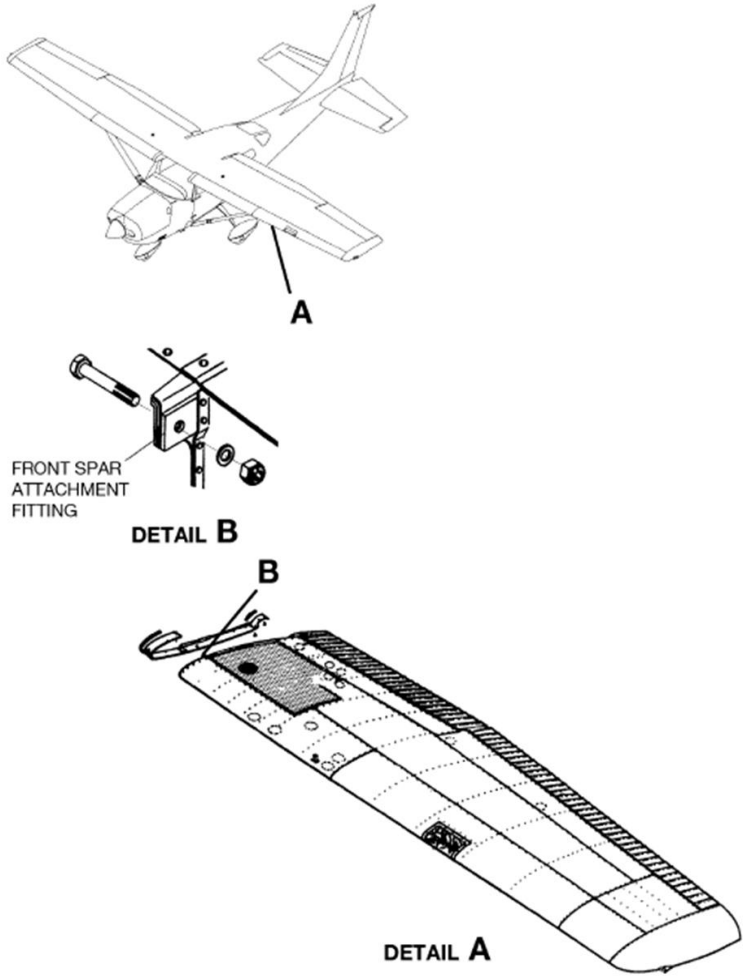

WING FRONT SPAR INSPECTION

DOI - CESSNA 206 SERIES - 3 YEAR STRUCTURAL INSPECTION

ACFT TYPE		3 YEAR INSPECTION REQUIREMENTS	MECH	INSP
206,A,B,C	15	This inspection is for severe corrosion environment. Inspect the carry-thru spar, upper portions of door posts, and wing attachments. Complete inspection as instructed below.		
TITLE		Wing Carry-Thru Structure Corrosion Inspection		

EFFECTIVITY	**206 S/N**		
	206-0001 thru 206-0275	P206-0001 thru P206-0160	U206-0276 thru U206-0437
		P206-0161 thru P206-0519	U206-0438 thru U206-1234

PURPOSE	To ensure structural integrity of the carry-thru spar structure.

		MECH	INSP
INSPECTION INSTRUCTIONS	A. Remove headliner and interior items necessary to gain access to the front and rear carry-thru structure.		
	B. Visually inspect front spar carry-thru area for loose or missing rivets or corrosion, especially between the spar channel and reinforcement, between the spar channel and upholstery retainer and between door post bulkhead attachment fittings and the spar channel. Refer to the figure below.		
	(1) Clean area before inspecting if grime or debris is present.		
	C. Visually inspect rear spar carry-thru area for loose or missing rivets or corrosion, especially between the door post bulkhead attachment fittings and the spar channel.		
	(1) Clean area before inspecting if grime or debris is present.		
	D. Inspect for corrosion at the wing attachment fittings, lugs and spar blocks.		
	(1) Clean area before inspecting if grime or debris is present.		

ACCESS AND DETECTABLE CRACK SIZE

ACCESS/LOCATION	DETECTABLE CRACK SIZE
Cabin Interior Section	Not Allowed

INSPECTION METHOD	Visual

		MECH	INSP
REPAIR AND MODIFICATION	A. Clean any corrosion products. The recommended procedure to remove corrosion is by hand sanding, using a fine grained sandpaper.		
	B. Sand to produce a diameter-to-depth ratio of about 10:1 after polishing to a minimum RMS 63 finish. Use ultrasonic methods to determine thickness after removing corrosion. Repairs are required if thickness is less than 90% of uncorroded material.		
	C. Apply corrosion protection.		

DOI - CESSNA 206 SERIES - 3 YEAR STRUCTURAL INSPECTION

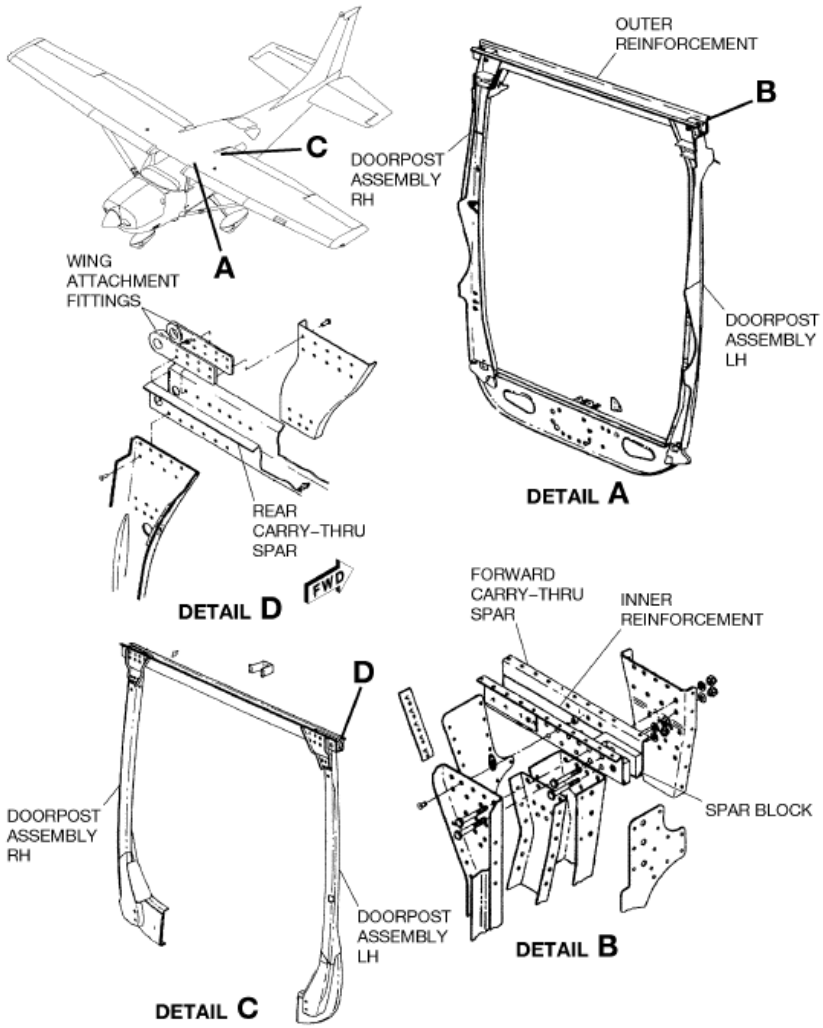

WING CARRY-THRU STRUCTURE CORROSION INSPECTION

ACFT TYPE		3 YEAR INSPECTION REQUIREMENTS	MECH	INSP
D,E,F,G	16	Inspect the carry-thru spar area, door post bulkhead attach fittings and spar channel. Complete inspection as instructed below.		
TITLE		Carry-Thru Structure Corrosion Inspection		

EFFECTIVITY	**206 S/N**	
	P206-0520 thru P20600647	U206-1235 thru U20603521
		U206-3522 thru U20607020

PURPOSE	To ensure structural integrity of the carry-thru spar structure.		
		MECH	INSP
INSPECTION INSTRUCTIONS	A. Remove headliner and interior items necessary to gain access to the front and rear carry-thru structure. Refer to appropriate manual for instructions.		
	B. Visually inspect front spar carry-thru area for loose or missing rivets or corrosion, especially between the spar channel and reinforcement, between the spar channel and upholstery retainer and between door post bulkhead attachment fittings and the spar channel. Refer to the figure below.		
	(1) Clean area before inspecting if grime or debris is present.		
	C. Visually inspect rear spar carry-thru area for loose or missing rivets or corrosion, especially between the door post bulkhead attachment fittings and the spar channel.		
	(1) Clean area before inspecting if grime or debris is present.		

DOI - CESSNA 206 SERIES - 3 YEAR STRUCTURAL INSPECTION

	MECH	INSP
D. Inspect for corrosion at the wing attachment fittings, lugs, and spar blocks.		
(1) Clean area before inspecting if grime or debris is present.		

ACCESS AND DETECTABLE CRACK SIZE	
ACCESS/LOCATION	**DETECTABLE CRACK SIZE**
Cabin Interior Section	Not Allowed

INSPECTION METHOD	Visual

		MECH	INSP
REPAIR AND MODIFICATION	A. Clean any corrosion products. The recommended procedure to remove corrosion is by hand sanding, using a fine grained sandpaper.		
	B. Sand to produce a diameter-to-depth ratio of about 10:1 after polishing to a minimum RMS 63 finish. Use ultrasonic methods to determine thickness after removing corrosion. Repairs are required if thickness is less than 90% of uncorroded material.		
	C. Apply corrosion protection.		

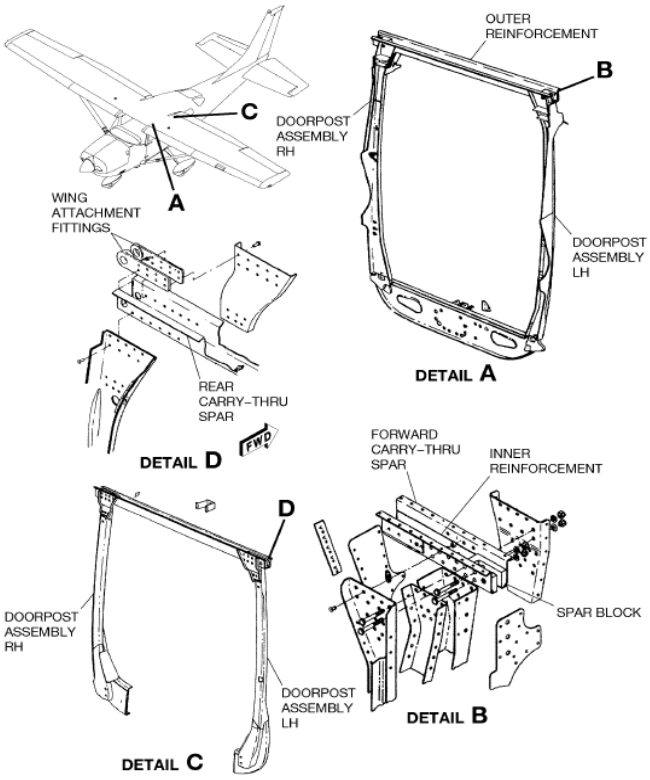

CARRY-THRU STRUCTURE CORROSION INSPECTION

ACFT TYPE		3 YEAR INSPECTION REQUIREMENTS	MECH	INSP
H	17	Inspect the carry-thru spar area, door post bulkhead attach fittings and spar channel. Complete inspection as instructed below.		
TITLE		Carry-Thru Structure Corrosion Inspection		

EFFECTIVITY	**206 S/N**	
	20608001 and On	T20608001 and On

PURPOSE	To ensure the structural integrity of the carry-thru spar structure.

DOI - CESSNA 206 SERIES - 3 YEAR STRUCTURAL INSPECTION

		MECH	INSP
INSPECTION INSTRUCTIONS	A. Remove the headliner and interior items necessary to gain access to the front and rear carry-thru structure. Refer to appropriate manual for instructions, and the figure below.		
	B. Do a visual inspection of the front spar carry-thru area for loose or missing rivets or corrosion, especially between the spar channel and reinforcement, between the spar channel and upholstery retainer, and between the door post bulkhead attachment fittings and the spar channel.		
	(1) Clean area before inspecting if grime or debris is present.		
	C. Visually inspect rear spar carry-thru area for loose or missing rivets or corrosion, especially between the door post bulkhead attachment fittings and the spar channel.		
	(1) Clean area before inspecting if grime or debris is present.		
	D. Inspect for corrosion at the wing attachment fittings, lugs and spar blocks.		
	(1) Clean area before inspecting if grime or debris is present.		
	E. Install the items that were removed to accomplish this inspection, refer to the applicable sections of this manual.		

ACCESS AND DETECTABLE CRACK SIZE

ACCESS/LOCATION	DETECTABLE CRACK SIZE
Cabin Interior Section	Not Allowed

INSPECTION METHOD	Visual

		MECH	INSP
REPAIR AND MODIFICATION	A. Clean any corrosion products. The recommended procedure to remove corrosion is by hand sanding, using a fine grained sandpaper.		
	B. Sand with 180 or finer grit abrasive cloth, to produce a diameter-to-depth ratio of about 10:1.		
	(1) To determine the depth of repaired area after removing the corrosion, use ultrasonic inspection methods to determine the thickness of the material after removing the corrosion. If the thickness of the material is less than 90% of uncorroded/new material, contact Cessna Customer Service for repair/replacement instructions.		
	C. Apply corrosion protection.		

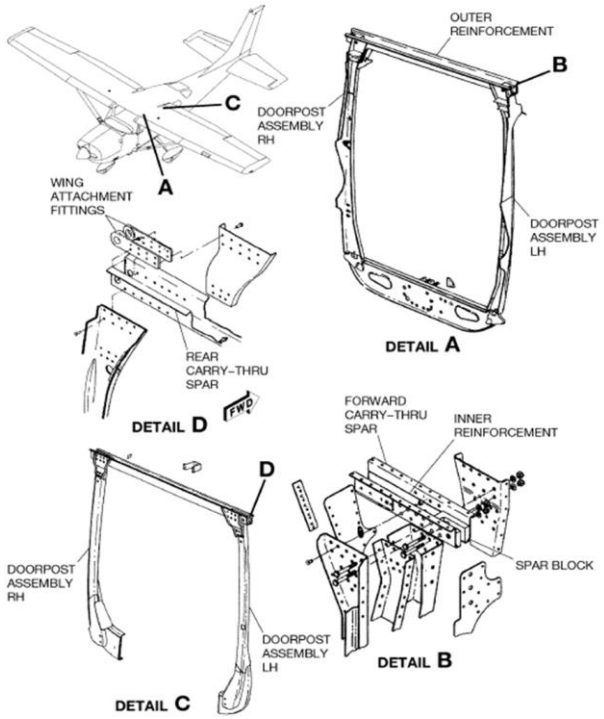

CARRY-THRU STRUCTURE CORROSION INSPECTION

DOI - CESSNA 206 SERIES - 3 YEAR STRUCTURAL INSPECTION

ACFT TYPE		3 YEAR INSPECTION REQUIREMENTS	MECH	INSP
206,A,B,C	18	Inspect the cabin interior skin panels, frames, and stringers for corrosion. Complete inspection as instructed below.		
TITLE		Cabin Interior Skin Panels Corrosion Inspection		

EFFECTIVITY	**206 S/N**		
	206-0001 thru 206-0275	P206-0001 thru P206-0160	U206-0276 thru U206-0437
		P206-0161 thru P206-0519	U206-0438 thru U206-1234

PURPOSE	To verify the integrity of the cabin skins, stringers, and frames under and around sound deadening material.

		MECH	INSP
INSPECTION INSTRUCTIONS	A. Remove interior of airplane to gain access to inside skins, stringers, and frames. Remove sound dampening material.		
	(1) Clean areas before inspecting if grime or debris are present.		
	B. Visually inspect skin panels for corrosion. Particular attention should be given to inspection of panels below windows, belly, and other areas where moisture could enter or accumulate.		
	C. Inspect interior of door skins and structure for corrosion.		
	D. Inspect frames and stringers for corrosion.		
	E. Inspect cabin windows for integrity of bond to preclude entry of water into cabin.		

ACCESS AND DETECTABLE CRACK SIZE

ACCESS/LOCATION	DETECTABLE CRACK SIZE
Cabin Interior	Not Applicable

INSPECTION METHOD	Visual

		MECH	INSP
REPAIR AND MODIFICATION	A. If corrosion is found, remove corrosion by lightly sanding corroded area, taking care to remove as little material as necessary to completely remove corrosion and remaining pits in skin.		
	B. Buff out sanding marks.		
	C. Assess remaining skin, stringer, or frame thickness by using an eddy current surface probe or ultrasonic testing methods to determine maximum material removed.		
	(1) If more than 0.004 inch of skin material has been removed from the local area, the area must be repaired or replaced.		
	(2) If more than 10% of stringer or frame material has been removed from the local area, the area must be repaired or replaced.		
	D. Clean and prime sanded areas.		
	E. Sound deadening material is for acoustic attenuation, and may be replaced or omitted at owner's option.		

DOI - CESSNA 206 SERIES - 3 YEAR STRUCTURAL INSPECTION

ZONE	ACFT TYPE		3 YEAR STRUCTURAL INSPECTION REQUIREMENTS	MECH	INSP
ARCTIC		19			
ARCTIC		20			
ARCTIC		21			
ARCTIC		22			
ARCTIC		23			
ARCTIC		24			
ARCTIC		25			
ARCTIC		26			
ARCTIC		27			
ARCTIC		28			
ARCTIC		29			
ARCTIC		30			
ARCTIC		31			
ARCTIC		32			
TEMPERATE		33			
TEMPERATE		34			
TEMPERATE		35			
TEMPERATE		36			
TEMPERATE		37			
TEMPERATE		38			
TEMPERATE		39			
TEMPERATE		40			
TEMPERATE		41			
TEMPERATE		42			
TEMPERATE		43			
TEMPERATE		44			
TEMPERATE		45			
TEMPERATE		46			
TEMPERATE		47			
	ALL	48	All panels opened for the inspection are closed and secure.		
	ALL	49	Run aircraft engine and leak check.		

DOI - CESSNA 206 SERIES - 3 YEAR STRUCTURAL INSPECTION

NOTES:

ASSURE PROPER MAINTENANCE RECORD ENTRIES HAVE BEEN MADE IAW 14 CFR 43.9

THE AIRCRAFT RECORDS CONSIST OF THE FOLLOWING;

1. AIRCRAFT, ENGINE & PROPELLER HARD LOGS.
2. ALL FORM 337'S, MAJOR REPAIR & ALTERATION.
3. COMPLIANCE LIST OF ALL PERTINENT AIRWORTHINESS DIRECTIVES.
4. MAINTENANCE SCHEDULE- LIST OF REQUIRED SPECIAL INSPECTIONS, COMPONENT OVERHAUL & TIME-LIFE LIMITS.
5. CURRENT & HISTORICAL WEIGHT & BALANCE STATUS & EQUIPMENT LIST
6. MINIMUM EQUIPMENT LIST AS REQUIRED.
7. SPECIAL FLIGHT AUTHORIZATIONS AND/OR SUPPLEMENTS

UNITED STATES DEPARTMENT OF THE INTERIOR

CESSNA 206 SERIES

5 YEAR STRUCTURAL MAINTENANCE CHECKS

THE INSPECTION WORK SHEETS / PACKAGES IN THIS DOCUMENT ARE FOR THE 'UNITED STATES DEPARTMENT OF THE INTERIOR' AIRCRAFT ONLY.

Inspection Sheet - Block Explanation

Example

ACFT TYPE		EXAMPLE INSPECTION REQUIREMENTS	MECH	INSP
ALL	1	Engine - Inspect for evidence of oil and fuel leaks. Wash engine/engine compartment if needed.		
H	2	Idle and Mixture Adjustment - Check idle speed and idle mixture (lean rise). Adjust if necessary.		
A,B,C,D,E,F	3	Turbocharger pressurized vent lines to fuel pump, discharge nozzles and fuel flow gage.	N/A	
A	**B**	**C**	**D**	**E**

Block A All - All Cessna aircraft in the 206 Series (all models).

Other than 'All' designated with the specific 206 model.

Block B Each inspection and task is given a line item number in the 2nd column.

Block C Describes inspection tasks.

Block D Mechanic sign-off block. N/A (Not Applicable) - should be used if the inspection cannot or should not be carried out due to (but not limited to) - 1. Serial number range. 2. Unit or option not installed on aircraft. 3. Previously complied with. 4. Climate zone applicability. A note beside the N/A to indicate the reason for it is recommended.

Block E The (white) INSP block should be initialed by an inspector who witnessed the task carried out by the mechanic and completed a final inspection and/or functional check in accordance with the line item requirements and relevant technical publications. The inspector shall not initial the INSP block until after the mechanic has initialed the MECH block. In a block that requires a Maintenance Inspector, he shall initial the white INSP block whenever N/A has been entered in the MECH block.

Climate Zone Supplemental Inspections and Servicing

Before commencing inspection and servicing, it must be confirmed which climate zone the subject aircraft is operated in. If the aircraft is above the 49th parallel it is in the Arctic Zone. If the aircraft is below the 49th parallel it is in the Temperate zone. The extra line items listed for the appropriate climate zone shall be added to the servicing, the not applicable climate zone line items shall be noted as N/A in the sign-off block.

Inspections: To be completed in accordance with this manual.

Repairs: To be completed in accordance with the appropriate Cessna Maintenance Manual.

Acronyms in use

IAW - In Accordance With

CPCP - Corrosion Prevention and Control Program

NDI - Non Destructive Inspection

ICA - Instructions for Continued Airworthiness

STC - Supplemental Type Certificate

PSE - Principle Structural Element

N/A - Not Applicable (see MECH Block D above)

OEM - Original Equipment Manufacturer

DOI - CESSNA 206 SERIES - 5 YEAR STRUCTURAL INSPECTION

'N' NUMBER:_____ MODEL: _____ AIRCRAFT S/N:_____

TACH HOURS:_____ AIRCRAFT TOTAL TIME:_____ ENG. SMOH:_____ PROP SMOH:_____

ACFT TYPE		5 YEAR STRUCTURAL INSPECTION REQUIREMENTS	MECH	INSP
G,H	1	Inspect the firewall structure. Complete inspection as instructed below.		
TITLE		Firewall Inspection		

EFFECTIVITY	**206 S/N**		
	20608001 and On	T20608001 and On	U206-3522 thru U20607020

PURPOSE	To ensure structural integrity of the firewall.

		MECH	INSP
INSPECTION INSTRUCTIONS	A. Remove the upper and lower engine cowlings from the airplane. Refer to appropriate manual for instructions.		
	B. Disconnect all electrical power from the airplane.		
	C. Visually inspect around each exhaust mount attach bracket and exhaust pipe support for cracking on forward side of the firewall.		
	(1) Clean the area before inspecting if grime or debris is present.		
	D. Inspect the firewall for wrinkles, cracks, sheared rivets, or other signs of damage or wear.		
	E. Install the items that were removed to accomplish this inspection. Refer to appropriate manual for instructions.		

ACCESS AND DETECTABLE CRACK SIZE

ACCESS/LOCATION	DETECTABLE CRACK SIZE
Cabin interior	Not Allowed

INSPECTION METHOD	Visual

		MECH	INSP
REPAIR AND MODIFICATION	Make repairs IAW appropriate manual.		

ACFT TYPE		5 YEAR INSPECTION REQUIREMENTS	MECH	INSP
206,A,B,C,D,E,F,G	2	Inspect main landing gear fittings. Complete inspection as instructed below.		
TITLE		Main Landing Gear Fittings Inspection		

EFFECTIVITY	**206 S/N**		
	206-0001 thru 206-0275	P206-0001 thru P206-0160	U206-0276 thru U206-0437
		P206-0161 thru P206-0519	U206-0438 thru U206-1234
		P206-0520 thru P20600647	U206-1235 thru U20603521
			U206-3522 thru U20607020

PURPOSE	To ensure structural integrity of the main landing gear fittings.

		MECH	INSP
INSPECTION INSTRUCTIONS	A. Inspect the outboard main landing gear fittings for cracking using a light and mirror. Refer to the figure below. Pay particular attention to the area directly above the forward and aft edges of the landing gear spring and the attachment of the fittings to the bulkheads.		
	(1) Clean area before inspecting if grime or debris is present.		
	B. Inspect the inboard main landing gear fittings for cracking using a light and mirror. Pay particular attention to the area directly below the landing gear spring attachment and the attachment of the fittings to the bulkheads.		
	(1) Clean area before inspecting if grime or debris is present.		

DOI - CESSNA 206 SERIES - 5 YEAR STRUCTURAL INSPECTION

ACCESS AND DETECTABLE CRACK SIZE	
ACCESS/LOCATION	**DETECTABLE CRACK SIZE**
Main Gear Support	Not Allowed

INSPECTION METHOD	Visual

		MECH	INSP
REPAIR AND MODIFICATION	A. Main landing gear fittings are contained between two wrap-around bulkheads which physically contain the bulkheads even after the attach fasteners are removed. A recommended method to replace main landing gear fittings is to support the airplane to maintain alignment during rework, remove the floorboard just forward of the forward main gear bulkhead, remove the four longerons forward of the forward main landing gear bulkhead, and then slide the forward main landing gear bulkhead forward to disengage it from the fittings. Since the attach holes will be reused to reinstall the parts, remove rivets carefully, to avoid excessively enlarging rivet holes. After the fittings are installed, reinstall the removed parts in reverse order. Make repairs IAW the appropriate manual.		

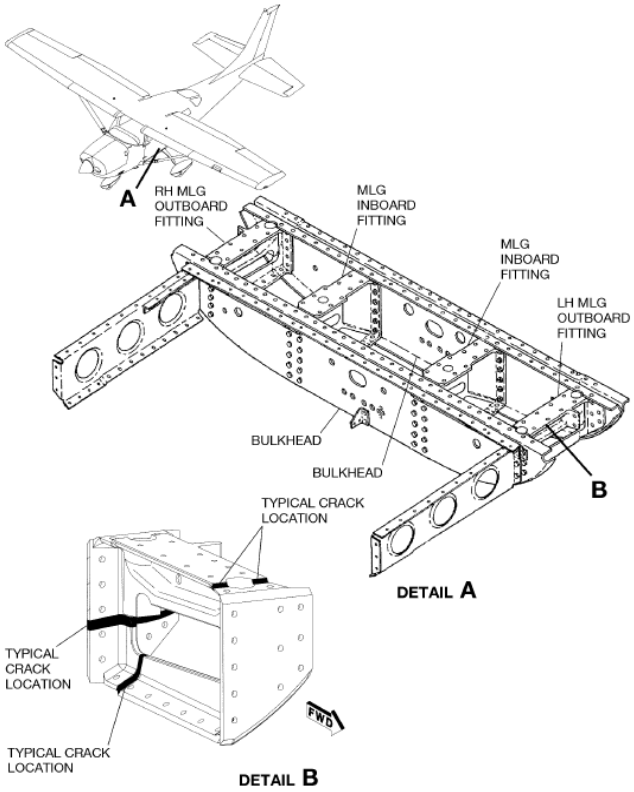

MAIN LANDING GEAR FITTINGS INSPECTION

ACFT TYPE		5 YEAR INSPECTION REQUIREMENTS	MECH	INSP
H	3	Inspect main landing gear fittings and attachment of the fittings to the bulkheads. Complete inspection as instructed below.		
TITLE		Main Landing Gear Fittings Inspection		

EFFECTIVITY	**206 S/N**	
	20608001 and On	T20608001 and On

PURPOSE	To ensure structural integrity of the main landing gear fittings.

		MECH	INSP
INSPECTION INSTRUCTIONS	A. Remove interior seats, floor coverings, and access panels to get access to the main landing gear attach fittings. Refer to appropriate manual for instructions, and the figure below.		
	B. Do a visual inspection of the outboard main landing gear fittings for cracking using a light and mirror. Pay particular attention to the area directly above the forward and aft edges of the landing gear spring and the attachment of the fittings to the bulkheads.		

	MECH	INSP
(1) Clean area before inspecting if grime or debris is present.		
C. Inspect the inboard main landing gear fittings for cracking using a light and mirror. Pay particular attention to the area directly below the landing gear spring attachment and the attachment of the fittings to the bulkheads.		
(1) Clean area before inspecting if grime or debris is present.		
D. Review the airplane maintenance records and verify that service bulletins SB06-53-02 and SB03-53-02 have been complied with for the affected airplane serial numbers. For affected airplanes that are found not in compliance with SB06-53-02 and SB03-53-02, accomplish the applicable service bulletin concurrent with this inspection.		
E. Install the items that were removed to accomplish this inspection. Refer to appropriate manual for instructions.		

ACCESS AND DETECTABLE CRACK SIZE

ACCESS/LOCATION	DETECTABLE CRACK SIZE
Main Gear Support	Not Allowed

INSPECTION METHOD	Visual

		MECH	INSP
REPAIR AND MODIFICATION	Main landing gear fittings are contained between two wrap-around bulkheads which physically contain the bulkheads even after the attach fasteners are removed. A recommended method to replace main landing gear fittings is to support the airplane to maintain alignment during rework, remove the floorboard just forward of the forward main gear bulkhead, remove the four longerons forward of the forward main landing gear bulkhead, and then slide the forward main landing gear bulkhead forward to disengage it from the fittings. Since the attach holes will be reused to reinstall the parts, remove rivets carefully, to avoid excessively enlarging the rivet holes. After the fittings are installed, reinstall the removed parts in reverse order. Make repairs IAW appropriate manual.		

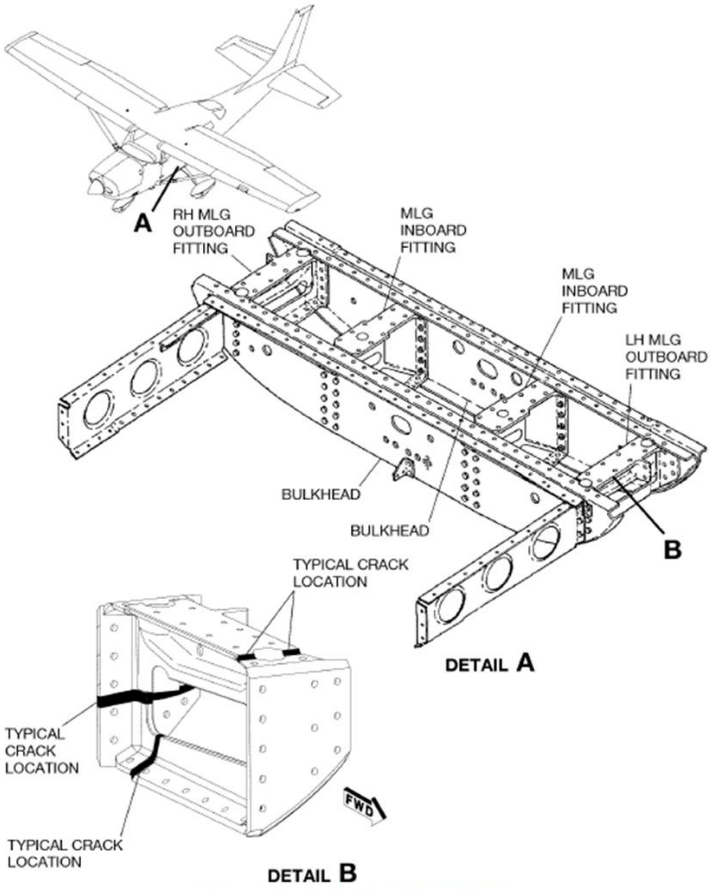

MAIN LANDING GEAR FITTINGS INSPECTION

DOI - CESSNA 206 SERIES - 5 YEAR STRUCTURAL INSPECTION

ACFT TYPE		5 YEAR INSPECTION REQUIREMENTS	MECH	INSP
206,A,B,C	5	Inspect nose landing gear torque links, bolts, bushings, and nose landing gear fork. Complete inspection as instructed below.		
TITLE		Nose Gear Torque Link, Bolt and Fork Inspection		

EFFECTIVITY	**206 S/N**		
	206-0001 thru 206-0275	P206-0001 thru P206-0160	U206-0276 thru U206-0437
		P206-0161 thru P206-0519	U206-0438 thru U206-1234

PURPOSE	To ensure structural integrity of the nose gear torque links, bolts and nose gear fork.

		MECH	INSP
INSPECTION INSTRUCTIONS	A. Deflate the nose gear strut. Refer to appropriate manual for instructions.		
	B. Remove torque link bolts one at a time. Refer to appropriate manual for instructions.		
	(1) Clean areas before inspecting if grime or debris are present.		
	C. Inspect for bent bolts or worn bolts. Refer to the figure below.		
	D. Inspect torque links for cracks.		
	E. Inspect torque link bushings for excessive wear or deformation.		
	(1) Check clearance between the NAS bushings in the upper and lower torque link joints and the spacers. The ID for the bushing is 0.3750-0.3765 inches and the OD for the spacer is 0.3744-0.3750 inches. By design, the maximum clearance is 0.0021 inches. Use 0.005 inches as a wear limit.		
	(2) Check clearance between NAS bushing and bolt at joint joining upper and lower torque links. The ID for the bushing is 0.1900-0.1915 inches and the OD for the bolt is 0.1885-0.1894 inches. By design, the maximum clearance is 0.003 inches. Use 0.006 inches as wear limit.		
	F. Install serviceable bolts after inspection.		
	G. Inspect the fork for cracking along the forging parting line.		
	(1) Clean areas before inspecting if grime or debris are present.		
	H. Support the forward fuselage.		
	I. Remove the bolts from the nose gear actuator retraction cylinder, one at a time, and check the bolts for straightness and deformation.		
	J. Reinstall the bolts and charge the oleo. Refer to appropriate manual for instructions.		

ACCESS AND DETECTABLE CRACK SIZE

ACCESS/LOCATION	DETECTABLE CRACK SIZE
Nose Gear Section	Not Allowed

INSPECTION METHOD	Visual

		MECH	INSP
REPAIR AND MODIFICATION	Replace bent bolts or worn bolts or bushings with new parts if wear limits are exceeded. A cracked fork or torque link is not repairable, and must be replaced. Make other repairs IAW the appropriate manual.		

DOI - CESSNA 206 SERIES - 5 YEAR STRUCTURAL INSPECTION

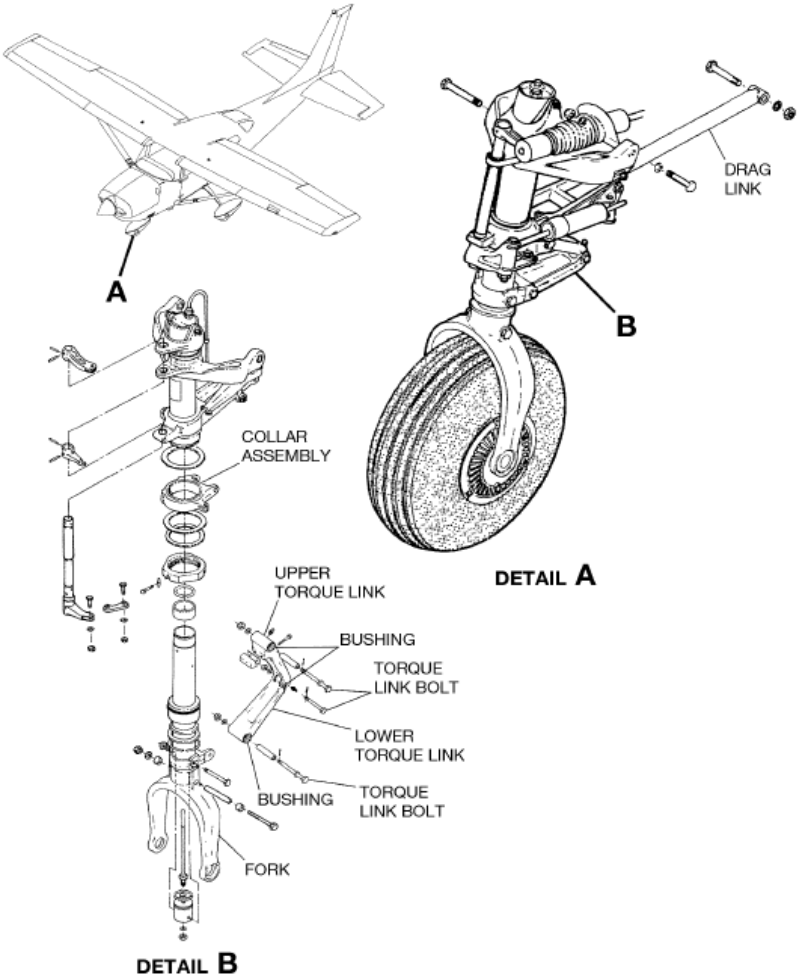

NOSE GEAR TORQUE LINK, BOLT AND FORK INSPECTION

ACFT TYPE		5 YEAR INSPECTION REQUIREMENTS	MECH	INSP
D,E,F,G,H	4	Inspect the nose landing gear torque links, drag link, bushings, nose landing gear fork and collar. Complete inspection as instructed below.		
TITLE		Nose Landing Gear Inspection		

	206 S/N		
EFFECTIVITY	20608001 and On	P206-0520 thru P20600647	U206-1235 thru U20603521
	T20608001 and On		U206-3522 thru U20607020

PURPOSE	To ensure structural integrity of the nose gear torque link, drag link bolts, nose gear fork and collar.		
		MECH	INSP
INSPECTION INSTRUCTIONS	A. Deflate the nose gear strut. Refer to appropriate manual for instructions.		
	B. Do a visual inspection of the torque links for cracks, refer to the figure below.		
	(1) Clean area before inspecting if grime or debris is present.		
	C. Remove torque link bolts one at a time. Refer to appropriate manual for instructions.		
	D. Inspect for bent bolts or worn bolts. Install serviceable bolts after inspection.		
	(1) Clean area before inspecting if grime or debris is present.		

	MECH	INSP
E. Inspect center torque link bushings for excessive wear or deformation. Maximum new clearance between the NAS bushings in the mid joint upper torque link lug (ID = 0.1900 to 0.1915 in.) and the bolt (OD = 0.1885 to 0.1894 in.) is 0.0030 in. A clearance of 0.006 in. is the maximum wear limit.		
(1) Clean area before inspecting if grime or debris is present.		
F. Inspect upper and lower joint torque link bushings for excessive wear or deformation. As the bolt clamps up on the spacer, the wear is to be measured between the NAS bushing and the spacer. Maximum new clearance between the NAS bushings in the torque link (ID = 0.3750 to 0.3765 in.) and the spacer (OD = 0.3744 to 0.3750 in.) is 0.0021 in. A clearance of 0.006 in. is the maximum wear limit.		
(1) Clean area before inspecting if grime or debris is present.		
G. Inspect the fork for cracking along the forging parting line.		
(1) Clean area before inspecting if grime or debris is present.		
H. Remove drag link bolts one at a time. Refer to appropriate manual for instructions.		
I. Inspect for bent bolts or worn bolts. Install serviceable bolts after inspection.		
(1) Clean area before inspecting if grime or debris is present.		
J. Inspect the attachment of drag link and the bolt for excessive wear or deformation. Maximum new clearance between the drag link and the bolt is 0.010 in.		
K. Inspect collar assembly for cracks.		
L. Service the nose landing gear strut. Refer to appropriate manual for instructions.		

ACCESS AND DETECTABLE CRACK SIZE

ACCESS/LOCATION	DETECTABLE CRACK SIZE
Nose Gear Section	Not Allowed

INSPECTION METHOD	Visual

		MECH	INSP
REPAIR AND MODIFICATION	Replace bent bolts or worn bolts or bushings with new parts if wear limits are exceeded. A cracked torque link, fork, or collar are not repairable and must be replaced. Make repairs IAW the appropriate manual.		

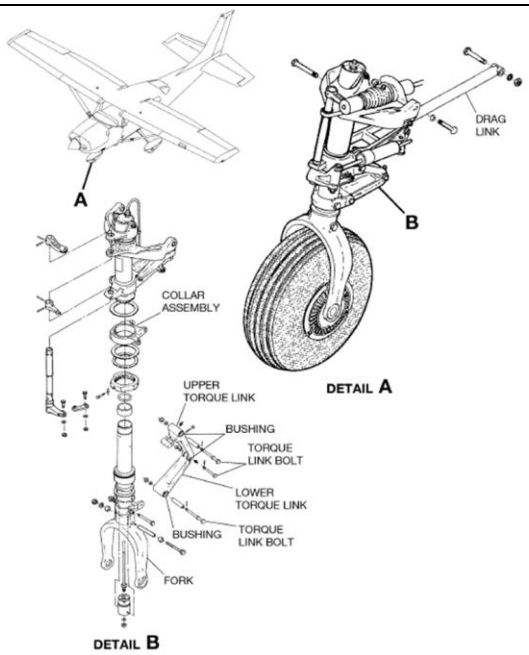

NOSE LANDING GEAR INSPECTION

DOI - CESSNA 206 SERIES - 5 YEAR STRUCTURAL INSPECTION

ACFT TYPE		5 YEAR INSPECTION REQUIREMENTS	MECH	INSP
A,B,C	5	Inspect elevator with foam in trailing edge and elevator trim tab that is foam filled for signs of corrosion, cracking or deterioration. Complete inspection as instructed below.		
TITLE		Elevator and Trim Tab Inspection		

EFFECTIVITY	**206 S/N**	
	P206-0161 thru P206-0519	U206-0438 thru U206-1234

PURPOSE	To inspect elevator with foam in trailing edge and elevator trim tab that is foam filled for signs of corrosion, cracking or deterioration.

		MECH	INSP
INSPECTION INSTRUCTIONS	**NOTE:** If elevator and trim tab have both been replaced with parts without foam, this inspection is complete.		
	A. Visually inspect elevator trim tab for corrosion, cracks and security. Refer to the figure below. Pay particular attention for indications of internal corrosion (pin holes, discoloration, cracks). Evidence of internal skin to foam separation, soft spots, paint blisters, unsealed edges of exposed foam, deterioration of foam, or corrosion are cause for replacement of the assembly.		
	(1) If trim tab is foam filled, replace trim tab with a tab that is not foam filled.		
	B. Visually inspect the attachment of the trim tab horn to the trim tab.		
	C. Visually inspect the trailing edge portion of the elevator for indications of internal corrosion damage or separation of the foam core from the skin. Pay particular attention for indications of internal corrosion (pin holes, discoloration, cracks). Evidence of internal skin to foam separation, soft spots, paint blisters, unsealed edges of exposed foam, deterioration of foam, or corrosion are cause for replacement of the assembly.		
	D. Rebalance elevator IAW the appropriate manual.		

ACCESS AND DETECTABLE CRACK SIZE

ACCESS/LOCATION	DETECTABLE CRACK SIZE
Horizontal Tail	Not Allowed

INSPECTION METHOD	Visual

		MECH	INSP
REPAIR AND MODIFICATION	Replace any foam filled trim tab with one that is not foam filled. Replace corroded elevators with elevators not containing foam in trailing edges.		

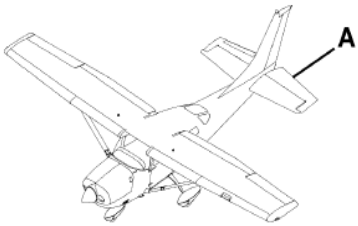

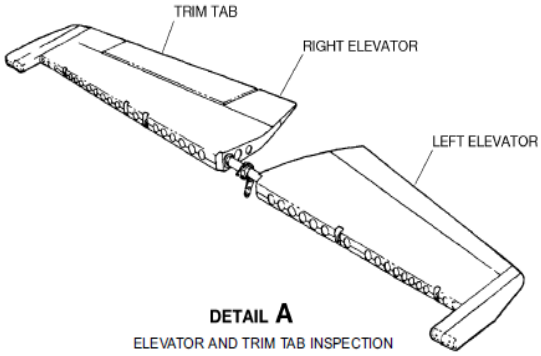

DETAIL A
ELEVATOR AND TRIM TAB INSPECTION

DOI - CESSNA 206 SERIES - 5 YEAR STRUCTURAL INSPECTION

ACFT TYPE		5 YEAR INSPECTION REQUIREMENTS	MECH	INSP
A,B,C	7	Inspect horizontal stabilizer and elevator, including spars, ribs, hinge bolts, hinge bearings, and attach fittings. Complete inspection as instructed below.		
TITLE		Horizontal Stabilizer, Elevators and Attachments Inspection		

EFFECTIVITY	**206 S/N**	
	P206-420 thru P206-0519	U206-0915 thru U206-1234

PURPOSE	To inspect horizontal stabilizer, elevator and attachments for signs of damage, fatigue or deterioration.		
		MECH	INSP
INSPECTION INSTRUCTIONS	A. Remove the elevators and stabilizer. Refer to appropriate manual for instructions.		
	NOTE: This requires removal of the vertical and horizontal stabilizers.		
	B. Open all stabilizer and elevator access panels.		
	(1) Clean areas before inspecting if dirt and debris are present.		
	C. Visually inspect stabilizer and elevator for condition, cracks and security; hinge bolts, hinge bearings for condition and security; bearings for freedom of rotation; attach fittings for evidence of damage, wear, failed fasteners and security. Refer to the figure below. Pay particular attention to the flange riveted onto the torque tube near the airplane centerline, and the inside of the torque tube along the lower surface where water could accumulate.		
	(1) If corrosion or a frozen bearing is found, conduct a surface eddy current inspection for cracks of each elevator hinge attach fitting. Refer to appropriate manual for instructions. The inspection is for the aluminum structure outside of the bearing, so set the instrument for aluminum. The hinge may be replaced in lieu of eddy current testing.		
	D. Review the aircraft records to determine if SE84-17 has been complied with, if applicable. If it has NOT, carefully examine the reinforcement approximately 4 inches from the aircraft centerline on the stabilizer rear spar for cracks.		
	NOTE: If there is any doubt that SE84-17 has been complied with, the original reinforcement was aluminum, while the replacement is steel, so if the reinforcement is magnetic, the reinforcement has been replaced.		
	E. Review the aircraft records to determine if SEB88-03 has been complied with. If it has NOT, carefully examine the reinforcement approximately 3 inches from the aircraft centerline on the stabilizer front spar for cracks.		
	NOTE: If there is any doubt that SEB88-03 has been complied with, the original reinforcement was smooth, while the replacement is stepped.		
	F. Visually inspect forward and aft stabilizer and elevator spars, ribs, and attach fittings for cracks, corrosion, loose fasteners, elongated fastener attach holes, cracking and deterioration. Pay particular attention to the skins at the location where stringers pass through ribs and the leading edge skin close to the fuselage. Apply finger pressure at the stringer intersection or the rib to spar juncture to check for free play indicating a broken rib. Visually inspect the forward stabilizer attachment bulkhead and stabilizer attach fittings for loose rivets and cracks.		
	G. Inspection of the inside in the stabilizer for corrosion.		
	(1) Use a borescope to view the interior of the stabilizer. Access the interior through any available access holes, and through the lightening holes in the stabilizer rear spar.		
	(2) Pay particular attention to rivet butts and flanges containing rivets.		
	H. Install the horizontal stabilizer, elevator and all previously removed access panels. Refer to appropriate manual for instructions.		

ACCESS AND DETECTABLE CRACK SIZE

ACCESS/LOCATION	DETECTABLE CRACK SIZE
Horizontal Tail	Not Allowed

INSPECTION METHOD	Visual, and Eddy Current

		MECH	INSP
REPAIR AND MODIFICATION	Replace damaged bolts and nuts. Replace damaged fittings and small parts. Replace damaged or loose rivets. If the stabilizer attach fitting is cracked, SK210-126 is available to replace a cracked fitting. Hinge bearings are prepacked with grease, which will eventually oxidize and harden after years of service. Several applications of penetrating oil will help free up a stiff bearing. It is the owner/operator option to replace stiff bearings. Modification Kit MK210-126 is available to repair damage to the horizontal tail front spar. Repairs may be made IAW the appropriate manual.		

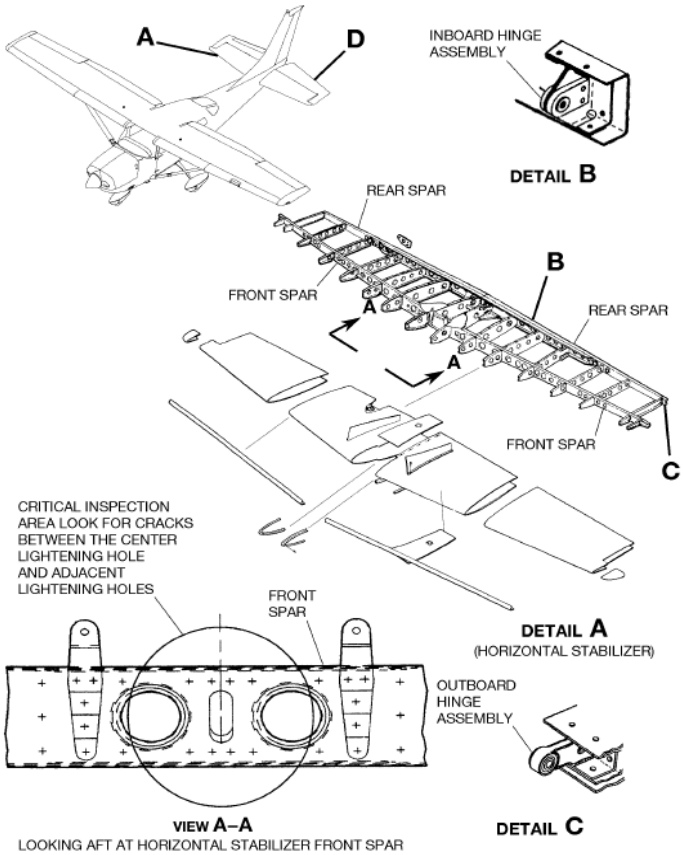

HORIZONTAL STABILIZER, ELEVATORS AND ATTACHMENTS INSPECTION

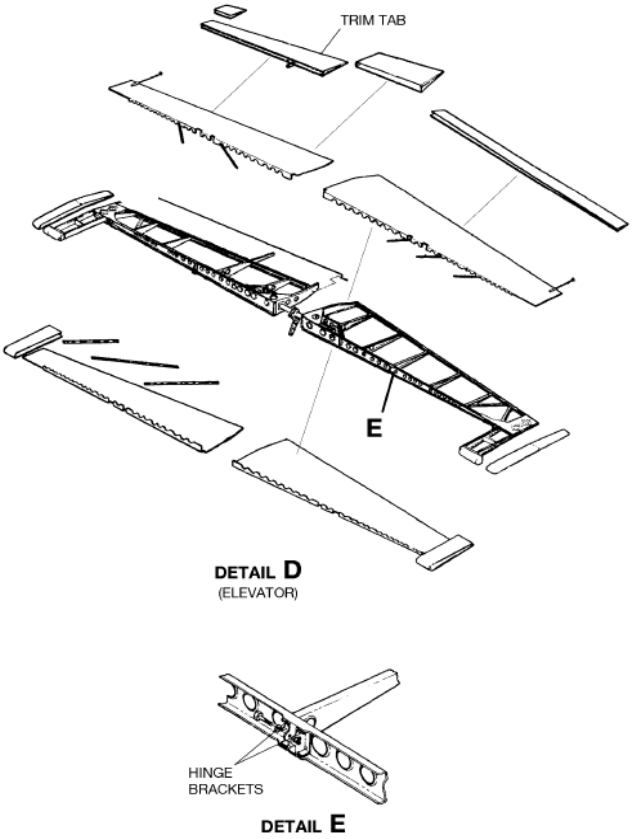

HORIZONTAL STABILIZER, ELEVATORS AND ATTACHMENTS INSPECTION

ACFT TYPE		5 YEAR INSPECTION REQUIREMENTS	MECH	INSP
G	6	Inspect elevator with foam in trailing edge and elevator trim tab that is foam filled for signs of corrosion, cracking or deterioration. Complete inspection as instructed below.		
TITLE		Elevator and Trim Tab Inspection		

EFFECTIVITY	**206 S/N**
	U206-3522 thru U20607020

PURPOSE	To inspect elevator with foam in trailing edge and elevator trim tab that is foam filled for signs of corrosion, cracking or deterioration.

		MECH	INSP
INSPECTION INSTRUCTIONS	**NOTE:** If elevator and trim tab have both been replaced with parts without foam, this inspection is complete.		
	A. Visually inspect elevator trim tab for corrosion, cracks and security. Refer to the figure below. Pay particular attention for indications of internal corrosion (pin holes, discoloration, cracks). Evidence of internal skin to foam separation, soft spots, paint blisters, unsealed edges of exposed foam, deterioration of foam, or corrosion are cause for replacement of the assembly.		

	MECH	INSP
(1) If trim tab is foam filled, replace trim tab with a tab that is not foam filled.		
B. Visually inspect the attachment of the trim tab horn to the trim tab.		
C. Visually inspect the trailing edge portion of the elevator for indications of internal corrosion damage or separation of the foam core from the skin. Pay particular attention for indications of internal corrosion (pin holes, discoloration, cracks). Evidence of internal skin to foam separation, soft spots, paint blisters, unsealed edges of exposed foam, deterioration of foam, or corrosion are cause for replacement of the assembly.		
D. Rebalance elevator IAW appropriate manual.		

ACCESS AND DETECTABLE CRACK SIZE

ACCESS/LOCATION	DETECTABLE CRACK SIZE
Horizontal Tail	Not Allowed

INSPECTION METHOD	Visual

		MECH	INSP
REPAIR AND MODIFICATION	Replace any foam filled trim tab with one that is not foam filled. Replace corroded elevators with elevators not containing foam in trailing edges.		

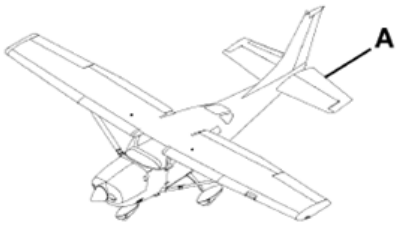

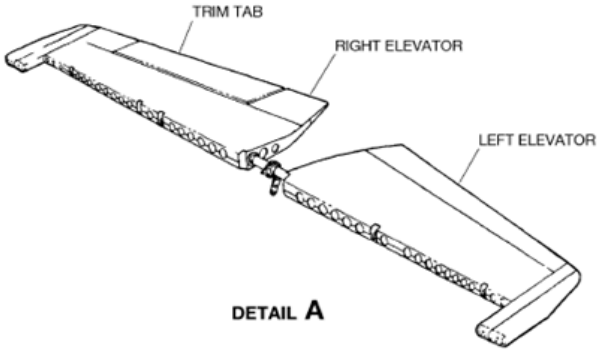

ELEVATOR AND TRIM TAB INSPECTION

ACFT TYPE		5 YEAR INSPECTION REQUIREMENTS	MECH	INSP
ALL	8	Fuselage lower internal structure beneath the floor panels. Make sure you inspect these areas: 1. Cabin structure under floorboards. **NOTE:** Corrosion Prevention and Control Program Inspection Item. Refer to appropriate manual for instructions.		
ALL	9	Fuselage internal structure in upper fuselage. Make sure you inspect these areas: 1. Cabin bulkhead corners. 2. Fuselage skin. **NOTE:** Corrosion Prevention and Control Program Inspection Item. Refer to appropriate manual for instructions.		

DOI - CESSNA 206 SERIES - 5 YEAR STRUCTURAL INSPECTION

ACFT TYPE		5 YEAR INSPECTION REQUIREMENTS	MECH	INSP
ALL	10	Areas of the cabin structure. Make sure you inspect these areas: 1. Firewall. 2. Firewall attachments. **NOTE:** Corrosion Prevention and Control Program Inspection Item. Refer to appropriate manual for instructions.		
ALL	11	Areas of the cabin structure. Make sure you inspect these areas: 1. Cabin door forward and aft frames. 2. Window frames with emphasis at stringers and channel assemblies from aft of door frame to aft bulkhead. 3. Seat attachment structure. 4. Aft Cabin Bulkhead. **NOTE:** Corrosion Prevention and Control Program Inspection Item. Refer to appropriate manual for instructions.		
ALL	12	Wing structure internal. Make sure you inspect these areas: 1. Wing main spar upper and lower spar caps. 2. Upper and lower wing attach spar fittings. 3. Wing lower skins. **NOTE:** Corrosion Prevention and Control Program Inspection item. Refer to appropriate manual for instructions.		
ALL	13	Wing structure external. Make sure you inspect these areas: 1. Skin with emphasis at skin overlaps and under access panels. 2. Rear spar upper and lower caps. 3. Rear spar web. 4. Inspect wing for corrosion and missing or loose fasteners. **NOTE:** Corrosion Prevention and Control Program Inspection Item. Refer to appropriate manual for instructions.		
206,A,B,C,D,E,F,G	14	Vertical stabilizer structure. Make sure you inspect these areas: 1. Forward spar attachment to tailcone bulkhead. 2. Aft spar attachment to tailcone bulkhead. 3. Front and rear spars. 4. Rear spar rudder hinges. **NOTE:** Corrosion Prevention and Control Program Inspection item. Refer to appropriate manual for instructions.		
H	15	Vertical stabilizer structure. Make sure you inspect these areas: 1. Forward spar attachment to tailcone bulkhead. 2. Aft spar attachment to lower stabilizer spar. 3. Front and rear spars. 4. Rear spar rudder hinges. **NOTE:** Corrosion Prevention and Control Program Inspection Item. Refer to appropriate manual for instructions.		
ALL	16	Nose gear axle assembly. Make sure you inspect these areas: 1. Nose gear axle and attach bolt. 2. Wheel halves. **NOTE:** Corrosion Prevention and Control Program Inspection Item. Refer to appropriate manual for instructions. **NOTE:** Disassemble the nose gear strut to get access. **NOTE:** Do not apply LPS-3 Heavy Duty Rust Inhibitor to the sliding surfaces of the oleo strut. **NOTE:** Coordinate with tire change.		
D,E,F,G,H	17	Horizontal stabilizer structure. Make sure you inspect these areas: 1. Stabilizer attachment to the tailcone bulkhead. 2. Front and rear spars. **NOTE:** Corrosion Prevention and Control Program Inspection Item. Refer to appropriate manual for instructions.		
206,A,B,C	18	Horizontal stabilizer and elevator structure. Make sure you inspect these areas: 1. Stabilizer attachment to the tailcone bulkhead. 2. Front and rear spars. 3. Elevator structure. 4. Elevator hinges, hinge bearings, and hinge fittings. **NOTE:** Corrosion Prevention and Control Program Inspection item. Refer to appropriate manual for instructions.		

DOI - CESSNA 206 SERIES - 5 YEAR STRUCTURAL INSPECTION

ACFT TYPE		5 YEAR INSPECTION REQUIREMENTS	MECH	INSP
G	19	Oxygen Cylinder - Inspect for condition, check hydrostatic test date and perform hydrostatic test, if due.		
206,A,B,C,D,E,F,G	20	Inspect seat rails for corrosion. Complete inspection as instructed below.		
TITLE		Seat Rails and Seat Rail Structure Corrosion Inspection		

EFFECTIVITY	**206 S/N**		
	206-0001 thru 206-0275	P206-0001 thru P206-0160	U206-0276 thru U206-0437
		P206-0161 thru P206-0519	U206-0438 thru U206-1234
		P206-0520 thru P20600647	U206-1235 thru U20603521
			U206-3522 thru U20607020

PURPOSE	To verify the integrity of the seat rails.

		MECH	INSP
INSPECTION INSTRUCTIONS	A. Verify the accomplishment of AD2011-10-09 for inspection of seat rails for cracks.		
	B. Remove seats, and carpet or mat, as necessary to gain access to inspect seat rails and seat rail base.		
	C. Visually inspect seat rails for corrosion. Refer to the figure below.		
	(1) If adhesive, grime or debris are present, clean area to inspect around base.		

ACCESS AND DETECTABLE CRACK SIZE

ACCESS/LOCATION	DETECTABLE CRACK SIZE
Cabin Interior	N/A

INSPECTION METHOD	Visual

		MECH	INSP
REPAIR AND MODIFICATION	A. If corrosion is found, repair in accordance with the following:		
	(1) Clean and lightly sand corroded area to remove surface damage and pits.		
	(2) Buff out scratch marks.		
	(3) Reinspect area and assess amount of material removed.		
	(a) If thickness of flange has been reduced by 10% or more, rail must be replaced.		
	(b) A local flange reduction of 20% of thickness is acceptable where confined to one side of extrusion, provided that the reduced area does not coincide with both seat pin hole and fastener hole.		
	(c) If thickness of web is reduced by 10% or more, rail must be replaced.		
	(d) If local web reduction of 20% exceeds 1" in length, rail must be replaced.		
	(e) if bulb is reduced in thickness at seat pin hole by 5% or more, rail must be replaced.		
	(f) If bulb is reduced by more than 10% at areas between holes, rail must be replaced.		
	(4) Brush coat sanded areas with alodine.		
	B. Reinstall seat and check for proper operation. If removed material on bulb interferes with proper operation of seat, replace rail.		
	C. For extensive damage or conditions not addressed, contact Cessna Customer Service prior to beginning the repair.		

DOI - CESSNA 206 SERIES - 5 YEAR STRUCTURAL INSPECTION

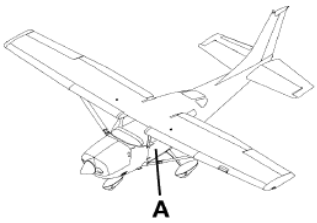

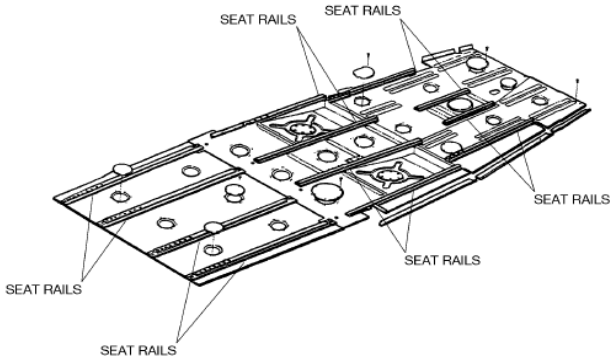

DETAIL A

SEAT RAILS AND SEAT RAIL STRUCTURE CORROSION INSPECTION

ACFT TYPE		5 YEAR INSPECTION REQUIREMENTS	MECH	INSP
H	21	This interval is for airplanes that operate in a severe corrosion environment. Inspect seat rails for corrosion. Complete inspection as instructed below.		
TITLE		Seat Rails and Seat Rail Structure Corrosion Inspection		

EFFECTIVITY	**206 S/N**	
	20608001 and On	T20608001 and On

PURPOSE	To verify the integrity of the seat rails.

		MECH	INSP
INSPECTION INSTRUCTIONS	A. Remove the seats and floor coverings as necessary to gain access to the seat rails and seat rail base. Refer to appropriate manual for instructions.		
	B. Do a visual inspection of the seat rails for corrosion.		
	(1) If adhesive, grime or debris is present, clean area to inspect around each seat rail base.		
	C. Install the items that were removed to accomplish this inspection. Refer to appropriate manual for instructions.		

ACCESS AND DETECTABLE CRACK SIZE

ACCESS/LOCATION	**DETECTABLE CRACK SIZE**
Cabin Interior	N/A

INSPECTION METHOD	Visual

		MECH	INSP
REPAIR AND MODIFICATION	A. If corrosion is found, repair in accordance with the following.		
	(1) Clean and lightly sand corroded area to remove surface damage and pits.		
	(2) Buff out scratch marks.		
	(3) Reinspect area and assess amount of material removed.		

	MECH	INSP
(a) If thickness of flange has been reduced by 10% or more, rail must be replaced.		
(b) A local flange reduction of 20% of thickness is acceptable where confined to one side of extrusion, provided that the reduced area does not coincide with both seat pin hole and fastener hole.		
(c) If thickness of web is reduced by 10% or more, rail must be replaced.		
(d) If local web reduction of 20% exceeds 1" in length, rail must be replaced.		
(e) If bulb is reduced in thickness at seat pin hole by 5% or more, rail must be replaced.		
(f) If bulb is reduced by more than 10% at areas between holes, rail must be replaced.		
(4) Brush coat sanded areas with alodine.		
B. Reinstall seat and check for proper operation. If removed material on bulb interferes with proper operation of seat, replace rail.		
C. For extensive damage or conditions not addressed, contact Cessna Customer Service prior to beginning the repair.		

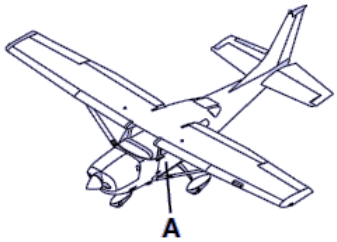

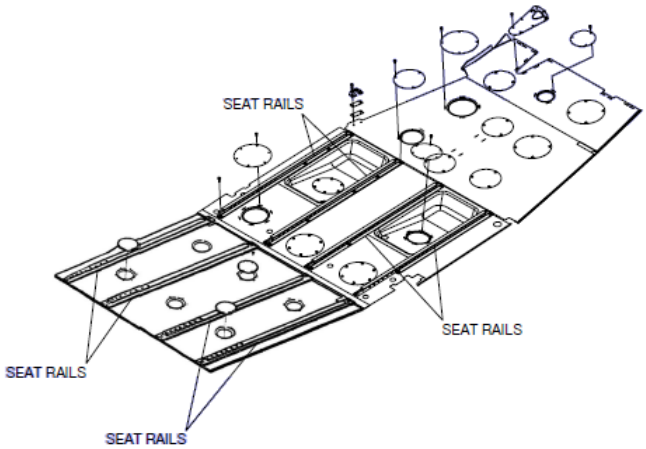

DETAIL A

ACFT TYPE		5 YEAR INSPECTION REQUIREMENTS	MECH	INSP
206,A,B,C,D,E,F,G	22	This inspection is for severe usage environment. Inspect lower forward doorposts and strut fittings. Complete inspection as instructed below.		
TITLE		Strut Attach Fitting Inspection		

EFFECTIVITY	**206 S/N**		
	206-0001 thru 206-0275	P206-0001 thru P206-0160	U206-0276 thru U206-0437,
		P206-0161 thru U206-0519	U206-0438 thru P206-1234
		P206-0520 thru P20600647	U206-1235 thru U20603521
			U206-3522 thru U20607020

PURPOSE	To verify the integrity of the strut fitting and adjacent bulkhead.

DOI - CESSNA 206 SERIES - 5 YEAR STRUCTURAL INSPECTION

		MECH	INSP
INSPECTION INSTRUCTIONS	A. Remove a portion of the interior of the airplane to gain access to the lower end of the front door post bulkhead.		
	B. Visually inspect the fitting for evidence of corrosion. Refer to the figure below.		
	(1) Clean area before inspecting if grime or debris is present.		
	C. Visually inspect the attachment of the fitting to the bulkhead. Pay particular attention to the bulkhead where the flange ends in a bend relief. Also look for the cracks following the contour of the wing strut support fitting. Refer to the figure below.		
	(1) Clean area before inspecting if grime or debris is present.		
	D. If evidence of corrosion is found, cracks are suspected or compliance flight hour limit exceeded, then conduct a surface eddy current inspection around each of the nine Hi-Shear steel fasteners through the fuselage wing strut attach fitting. Refer to appropriate manual for instructions.		
	NOTE: If removal of any of the Hi-Shear fasteners is necessary, they may be replaced with Hi-Lok fasteners.		

ACCESS AND DETECTABLE CRACK SIZE

ACCESS/LOCATION	DETECTABLE CRACK SIZE
Cabin	Not Applicable

INSPECTION METHOD	Visual and Eddy Current

		MECH	INSP
REPAIR AND MODIFICATION	A. If corrosion is found, remove corrosion by lightly sanding corroded area, taking care to remove as little material as necessary to completely remove corrosion and remaining pits in fitting or bulkhead.		
	B. Buff out sanding marks.		
	C. Assess remaining bulkhead thickness. If more than 10%of bulkhead material has been removed from the local area, the area must be repaired or replaced.		
	D. Clean and prime sanded areas.		
	E. Damaged bulkheads may be repaired in accordance with Service Bulletin SEB93-5. Coordinate any repair not available in Service Bulletin SEB93-5 with Cessna Customer Service prior to beginning repair.		
	F. Replace strut attach forgings with crack indications.		

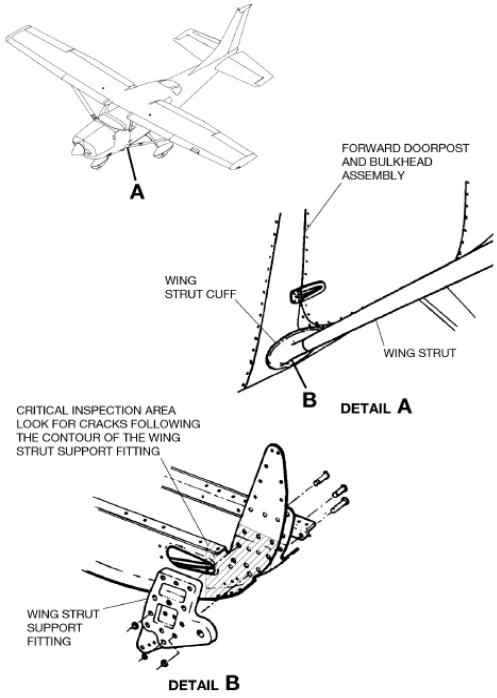

STRUT ATTACH FITTING INSPECTION

DOI - CESSNA 206 SERIES - 5 YEAR STRUCTURAL INSPECTION

ACFT TYPE		5 YEAR INSPECTION REQUIREMENTS	MECH	INSP
ALL	23	Inspect strut and wing strut attachments. Complete inspection as instructed below.		
TITLE		Strut and Wing Strut Attachment Inspection		

EFFECTIVITY	**206 S/N**		
	206-0001 thru 206-0275	P206-0001 thru P206-0160	U206-0276 thru U206-0437
	20608001 and On	P206-0161 thru P206-0519	U206-0438 thru U206-1234
	T20608001 and On	P206-0520 thru P20600647	U206-1235 thru U20603521
			U206-3522 thru U20607020

PURPOSE	To verify the integrity of the strut and strut attachment fitting to the wing.

		MECH	INSP
INSPECTION INSTRUCTIONS	A. Remove the wing strut upper and lower fairings. Refer to appropriate manual for instructions.		
	B. If the flight hours meet or exceed the inspection compliance hours (1000 hours), proceed to Detailed Attach Fitting inspection.		
	(1) Visually inspect the strut attachment fittings for cracks or corrosion. Refer to the figure below.		
	(a) Clean area before inspecting if grime or debris is present.		
	(b) If crack(s) or corrosion is found, proceed to Detailed Attach Fitting Inspection.		
	(2) Visually inspect the strut tube for cracks or corrosion.		
	(a) Clean area before inspecting if grime or debris is present.		
	(b) If crack(s) or corrosion is found, proceed to Detailed Attach Fitting Inspection.		
	(3) If no crack(s) or corrosion is found, install fairings. The inspection is complete.		
	C. Detailed Attach Fitting Inspection		
	(1) Support the wing to minimize the load on the strut to wing attach bolt.		
	(2) Remove the upper attach bolt and lower the strut to a support.		
	(3) Remove the lower attach bolt and remove the strut.		
	(4) Visually examine the strut tube for cracks or corrosion.		
	(5) Visually inspect the strut attachment fittings for corrosion.		
	(6) Inspect using Eddy current for cracks radiating from the wing and fuselage attach holes in the wing strut end fitting. Refer to the figure below.		
	(7) Replace the strut by installing the lower attachment, then the upper attachment. Refer to appropriate manual for instructions.		

ACCESS AND DETECTABLE CRACK SIZE

ACCESS/LOCATION	DETECTABLE CRACK SIZE
Wing Strut	Not Applicable

INSPECTION METHOD	Visual and Eddy Current

		MECH	INSP
REPAIR AND MODIFICATION	A. If corrosion is found, remove corrosion by lightly sanding corroded area, taking care to remove as little material as necessary to completely remove corrosion. If the material thickness is less than 90% of the uncorroded section, then replace the affected part.		
	B. Buff out sanding marks.		
	C. Corrosion or damage to attachment holes will require specialized rework. Contact Cessna Field Service for rework of corroded or damaged attachment holes.		

	MECH	INSP
D. Clean and prime sanded areas.		

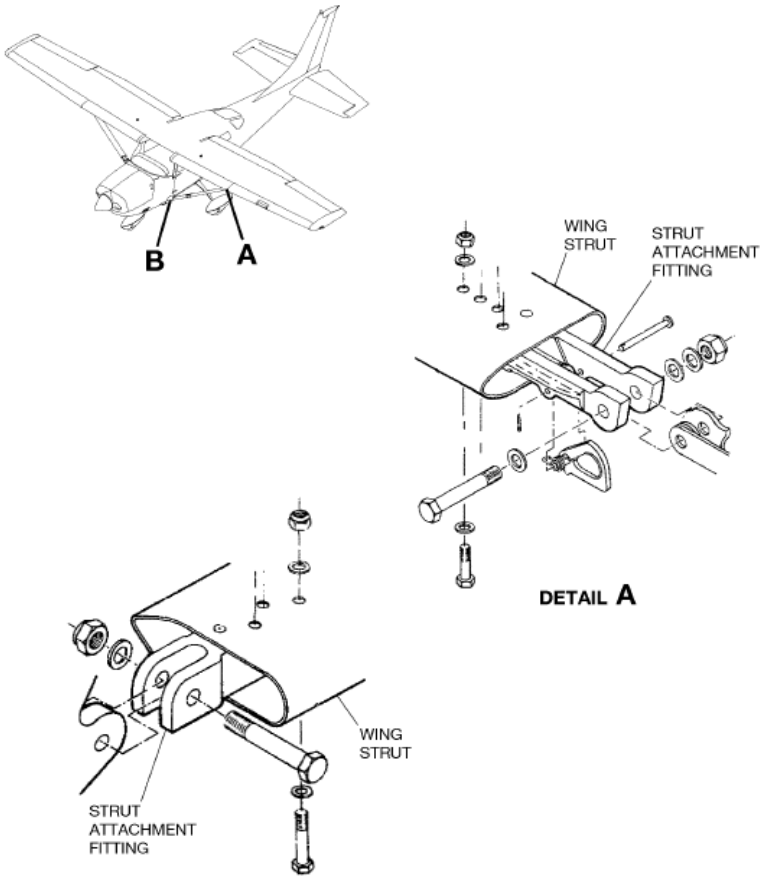

STRUT AND WING STRUT ATTACHMENT INSPECTION

ACFT TYPE		5 YEAR INSPECTION REQUIREMENTS	MECH	INSP
H	24	Inspect the forward doorpost and surrounding structure. Complete inspection as instructed below.		
TITLE		Fuselage Forward Doorpost Inspection		

EFFECTIVITY	**206 S/N**	
	20608001 and On	T20608001 and On

PURPOSE	To verify integrity of the fuselage lower forward doorpost.

		MECH	INSP
INSPECTION INSTRUCTIONS	A. Remove a portion of the interior of the airplane to gain access to the lower end of the forward left and right doorpost bulkheads. Refer to appropriate manual for instructions, and the figure below.		
	B. Remove floorboard inspection covers in areas fore and aft of doorposts. The critical inspection area must be fully exposed.		
	C. Using a flashlight and inspection mirror, visually inspect the area at the intersection of the doorpost and the forward doorpost bulkhead. Look for cracks that follow the bottom contour. Refer to the figure below.		
	(1) Clean the area before inspecting if grime or debris is present.		
	D. Visually inspect the door post area for cracks where the cabin door lower hinges attach to the door posts.		
	(1) Clean the area before inspecting if grime or debris is present.		

	MECH	INSP
E. Visually inspect the strut fitting area for evidence of corrosion.		
(1) Clean the area before inspecting if grime or debris is present.		
F. If the airplane is equipped with a fuel step, visually inspect the fuselage skin under the fuel step for cracks.		
G. If evidence of corrosion is found, cracks are suspected, or the compliance time limit is exceeded, conduct a surface eddy current inspection of the bulkhead around the strut attach fitting. Refer to appropriate manual for instructions.		
H. Install the items that were removed to accomplish this inspection, refer to the applicable sections of this manual.		

ACCESS AND DETECTABLE CRACK SIZE

ACCESS/LOCATION	DETECTABLE CRACK SIZE
Cabin	Not Allowed

INSPECTION METHOD	Visual with Eddy Current if needed

		MECH	INSP
REPAIR AND MODIFICATION	A. If corrosion is found, remove corrosion by lightly sanding corroded area, taking care to remove as little material as necessary to completely remove corrosion and remaining pits in fitting or bulkhead.		
	B. Buff out sanding marks.		
	C. Assess remaining bulkhead thickness. If more than 10% of bulkhead material has been removed from the local area, the area must be repaired or replaced.		
	D. Clean and prime sanded areas.		
	E. Damaged bulkheads may be repaired. Coordinate any repair needed with Cessna Customer Service prior to beginning repair.		
	F. Replace strut attach fittings with crack indications.		

Figure 1. Fuselage Forward Doorpost Inspection

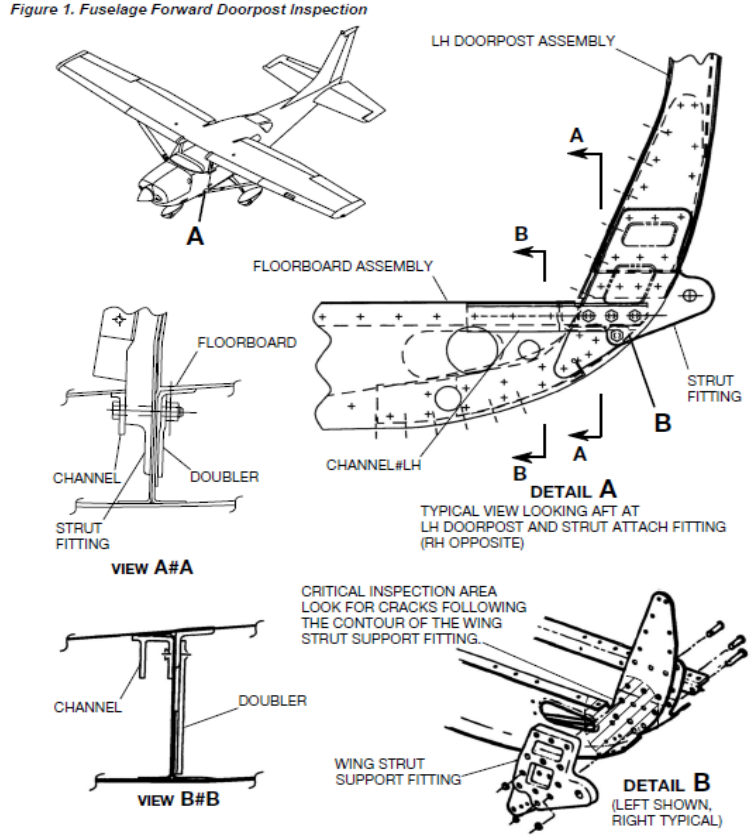

DOI - CESSNA 206 SERIES - 5 YEAR STRUCTURAL INSPECTION

ACFT TYPE		5 YEAR INSPECTION REQUIREMENTS	MECH	INSP
206,A,B,C	25	Inspect main landing gear spring for rust or damage to finish. Complete inspection as instructed below.		
TITLE		Landing Gear Spring Corrosion Inspection		

EFFECTIVITY	**206 S/N**		
	206-0001 thru 206-0275	P206-0001 thru P206-0160	U206-0276 thru U206-0437
		P206-0161 thru P206-0519	U206-0438 thru U206-1234

PURPOSE	To ensure corrosion protection of main landing gear springs.

		MECH	INSP
INSPECTION INSTRUCTIONS	**NOTE:** The main landing gear springs are made from high strength steel that is shot peened on the lower surface to increase the fatigue life of the part. If the protective layer of paint is chipped or worn away, corrosion (rust) is likely to occur.		
	A. Remove landing gear fairing. Refer to appropriate manual for instructions.		
	B. Inspect the spring for worn or chipped paint. Refer to the figure below. If rust has developed, rework the gear in accordance with the repair/modification below.		
	(1) Clean area before inspecting if grime or debris is present.		
	C. If the finish is worn or chipped, refinish the landing gear springs. Refer to appropriate manual for instructions.		
	D. Inspect the main landing gear axle attach holes for evidence of corrosion.		
	E. Inspect the main landing gear spring adjacent to the step attachment for evidence of corrosion.		
	F. Install landing gear fairing. Refer to appropriate manual for instructions.		

ACCESS AND DETECTABLE CRACK SIZE

ACCESS/LOCATION	DETECTABLE CRACK SIZE
Main Gear Section	Not Allowed

INSPECTION METHOD	Visual

		MECH	INSP
REPAIR AND MODIFICATION	A. If rust has developed on the landing gear spring, it must be removed before refinishing. The recommended procedure to remove rust is by hand sanding, using a fine grained sandpaper.		
	B. Refer to the applicable manual for detailed instructions on corrosion removal on landing gear springs and axles.		
	C. Refinish sanded areas.		
	(1) Solvent Wipe.		
	(a) Wipe off excess oil, grease or dirt from the surface to be cleaned.		
	(b) Apply solvent to a clean cloth, preferably by pouring solvent onto cloth from a safety can or other approved, labeled container. The cloth must be well saturated, but not dripping.		
	(c) Wipe surface with the moistened cloth as necessary to dissolve or loosen soil. Work a small enough area so the surface being cleaned remains wet.		
	(d) Immediately wipe the surface with a clean, dry cloth, while the solvent is still wet. Do not allow the surface to evaporate dry.		
	(e) Do steps (b) through (d) again until there is no discoloration on the drying cloth.		
	(2) Apply corrosion primer in accordance with Corrosion-Resistant Primer MIL-PRF-23377G or later.		
	(a) Mix and apply in accordance with manufacturer's instructions.		

	MECH	INSP
(b) Apply mixture with a wet cross coat to yield a dry film thickness of 0.6 to 0.8 mils.		
(c) Allow to air dry for two to four hours.		
(d) Apply topcoat within 24 hours.		
(3) Apply Polyurethane Enamel Topcoat.		
(a) Mix and apply in accordance with manufacturer's instructions.		
(b) Apply mixture with a wet cross coat to produce a dry film thickness of 1.5-2.0 mils.		
(c) Allow to air dry per the manufacturer's instruction.		

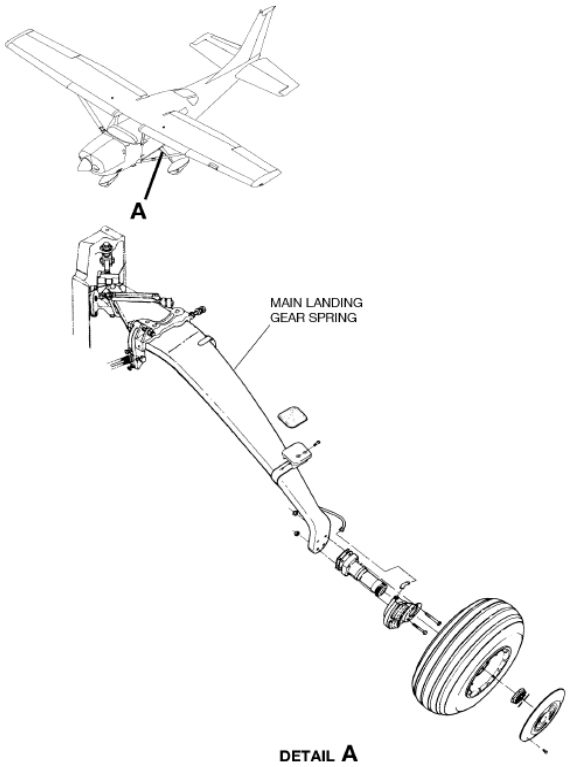

DETAIL A

LANDING GEAR SPRING CORROSION INSPECTIION

ACFT TYPE		5 YEAR INSPECTION REQUIREMENTS	MECH	INSP
D,E,F,G	26	Inspect main landing gear spring for rust or damage to finish. Complete inspection as instructed below.		
TITLE		Landing Gear Spring Corrosion Inspection		

EFFECTIVITY	**206 S/N**	
	P206-0520 thru P20600647	U206-1235 thru U20603521
		U206-3522 thru U20607020

PURPOSE	To ensure corrosion protection of main landing gear springs.

		MECH	INSP
INSPECTION INSTRUCTIONS	**NOTE:** The main landing gear springs are made from high strength steel that is shot peened on the lower surface to increase the fatigue life of the part. If the protective layer of paint is chipped or worn away, corrosion (rust) is likely to occur.		
	A. Remove landing gear fairing. Refer to appropriate manual for instructions.		

	MECH	INSP
B. Inspect the spring for worn or chipped paint. Refer to the figure below. If rust has developed, rework the gear in accordance with the repair/modification below.		
(1) Clean area before inspecting if grime or debris is present.		
C. If the finish is worn or chipped, refinish the landing gear springs.		
D. Inspect the axle attachment holes for evidence of corrosion.		
E. Install landing gear fairing. Refer to appropriate manual for instructions.		

ACCESS AND DETECTABLE CRACK SIZE

ACCESS/LOCATION	DETECTABLE CRACK SIZE
Main Gear Section	Not Allowed

INSPECTION METHOD	Visual

		MECH	INSP
REPAIR AND MODIFICATION	A. If rust has developed on the landing gear spring, it must be removed before refinishing. The recommended procedure to remove rust is by hand sanding, using a fine grained sandpaper.		
	B. Refer to the applicable manual for detailed instructions on corrosion removal on landing gear springs and axles.		
	C. Refinish sanded areas.		
	(1) Solvent Wipe.		
	(a) Wipe off excess oil, grease or dirt from the surface to be cleaned.		
	(b) Apply solvent to a clean cloth, preferably by pouring solvent onto cloth from a safety can or other approved, labeled container. The cloth must be well saturated, but not dripping.		
	(c) Wipe surface with the moistened cloth as necessary to dissolve or loosen soil. Work a small enough area so the surface being cleaned remains wet.		
	(d) Immediately wipe the surface with a clean, dry cloth, while the solvent is still wet. Do not allow the surface to evaporate dry.		
	(e) Do steps (b) through (d) again until there is no discoloration on the drying cloth.		
	(2) Apply corrosion primer in accordance with Corrosion-Resistant Primer MIL-PRF-23377G or later.		
	(a) Mix and apply in accordance with manufacturer's instructions.		
	(b) Apply mixture with a wet cross coat to yield a dry film thickness of 0.6 to 0.8 mils.		
	(c) Allow to air dry for two to four hours.		
	(d) Apply topcoat within 24 hours.		
	(3) Apply Polyurethane Enamel Topcoat.		
	(a) Mix and apply in accordance with manufacturer's instructions.		
	(b) Apply mixture with a wet cross coat to produce a dry film thickness of 1.5-2.0 mils.		
	(c) Allow to air dry per the manufacturer's instruction.		

DOI - CESSNA 206 SERIES - 5 YEAR STRUCTURAL INSPECTION

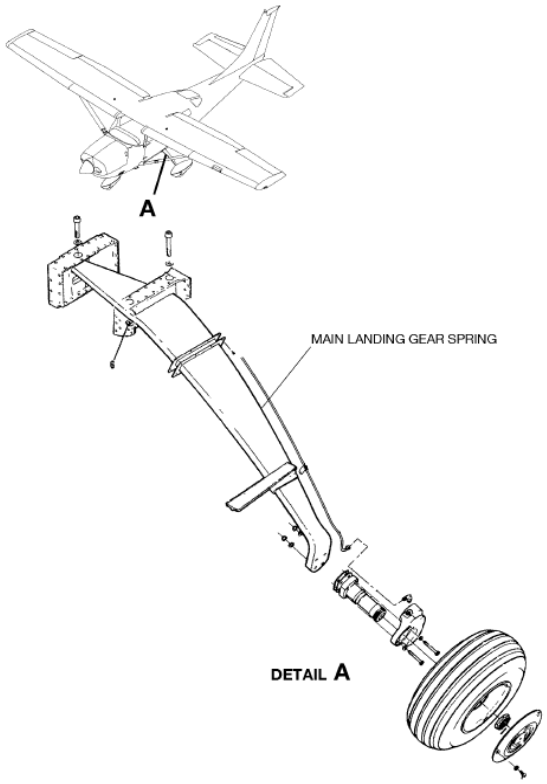

LANDING GEAR SPRING CORROSION INSPECTION

ACFT TYPE		5 YEAR INSPECTION REQUIREMENTS	MECH	INSP
H	27	Inspect main landing gear spring for rust or damage to finish. Complete inspection as instructed below.		
TITLE		Landing Gear Spring Corrosion Inspection		

EFFECTIVITY	**206 S/N**	
	20608001 and On	T20608001 and On

PURPOSE	To ensure corrosion protection of main landing gear springs.

		MECH	INSP
INSPECTION INSTRUCTIONS	**NOTE:** The main landing gear flat springs are made from high strength steel that is shot peened on the lower surface to increase the fatigue life of the part. If the protective layer of paint is chipped or worn away, corrosion (rust) is likely to occur.		
	A. Remove the landing gear fairings, refer to the applicable sections of this manual.		
	B. Do an inspection of the spring for worn or chipped paint, refer to the figure below. If rust has developed, rework the gear in accordance with the repair/modification provided in this document.		
	(1) Clean the area before inspecting if grime or debris is present.		
	C. If the finish is worn or chipped, refinish the landing gear springs.		
	D. Inspect the axle attach holes for corrosion.		
	(1) Clean area before inspecting if grime or debris is present.		
	E. Install the items that were removed to accomplish this inspection. Refer to appropriate manual for instructions.		

ACCESS AND DETECTABLE CRACK SIZE

ACCESS/LOCATION	DETECTABLE CRACK SIZE
Main Gear Section	Not Allowed

INSPECTION METHOD	Visual

		MECH	INSP
REPAIR AND MODIFICATION	A. If rust has developed on the landing gear spring, it must be removed before refinishing. The recommended procedure to remove rust is by hand sanding, using a fine grained sandpaper.		
	B. Sand with 180 or finer grit abrasive cloth, to produce a diameter-to-depth ratio of about 10:1.		
	(1) To determine the depth of repaired area after removing the corrosion, use a straight edge and feeler gages. If the repaired corrosion pit or wear area is deeper than 0.012 inch, contact Cessna Customer Service for repair/replacement instructions.		
	C. Refinish sanded areas.		
	(1) Solvent Wipe.		
	(a) Wipe off excess oil, grease or dirt from the surface to be cleaned.		
	(b) Apply solvent to a clean cloth, preferably by pouring solvent onto cloth from a safety can or other approved, labeled container. The cloth must be well saturated, but not dripping.		
	(c) Wipe surface with the moistened cloth as necessary to dissolve or loosen soil. Work a small enough area so the surface being cleaned remains wet.		
	(d) Immediately wipe the surface with a clean, dry cloth, while the solvent is still wet. Do not allow the surface to evaporate dry.		
	(e) Do steps (b) through (d) again until there is no discoloration on the drying cloth.		
	(2) Apply corrosion primer in accordance with Corrosion-Resistant Primer MIL-PRF-23377G or later.		
	(a) Mix and apply in accordance with manufacturer's instructions.		
	(b) Apply mixture with a wet cross coat to yield a dry film thickness of 0.6 to 0.8 mils.		
	(c) Allow to air dry for two to four hours.		
	(d) Apply topcoat within 24 hours.		
	(3) Apply Polyurethane Enamel Topcoat.		
	(a) Mix and apply in accordance with manufacturer's instructions.		
	(b) Apply mixture with a wet cross coat to produce a dry film thickness of 1.5-2.0 mils.		
	(c) Allow to air dry per the manufacturer's instruction.		

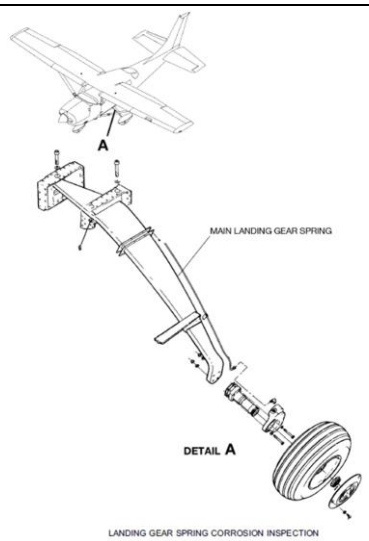

LANDING GEAR SPRING CORROSION INSPECTION

DOI - CESSNA 206 SERIES - 5 YEAR STRUCTURAL INSPECTION

ACFT TYPE		5 YEAR INSPECTION REQUIREMENTS	MECH	INSP
D,E,F,G	28	Inspect the cabin interior skin panels, frames and stringers. Complete inspection as instructed below.		
TITLE		Fuselage Interior Skin Panels Corrosion Inspection		

EFFECTIVITY	**206 S/N**	
	P206-0520 thru P20600647	U206-1235 thru U20603521
		U206-3522 thru U20607020

PURPOSE	To verify the integrity of the cabin skins, stringers and frames under and around sound deadening material.

		MECH	INSP
INSPECTION INSTRUCTIONS	A. Remove interior of airplane to gain access to inside skins, stringers and frames. Remove sound dampening material.		
	B. Visually inspect skin panels for corrosion. Particular attention should be given to inspection of panels below windows, belly and other areas where moisture could enter or accumulate.		
	(1) Clean area before inspecting if grime or debris is present.		
	C. Inspect interior of door skins and structure for corrosion.		
	D. Inspect frames and stringers for corrosion.		
	E. Inspect cabin windows for integrity of seal to preclude entry of water into cabin.		

ACCESS AND DETECTABLE CRACK SIZE

ACCESS/LOCATION	DETECTABLE CRACK SIZE
Fuselage Interior	Not Applicable

INSPECTION METHOD	Visual, Ultrasonic Thickness Test

		MECH	INSP
REPAIR AND MODIFICATION	A. If corrosion is found, remove corrosion by lightly sanding corroded area, taking care to remove as little material as necessary to completely remove corrosion and remaining pits in skin.		
	B. Buff out sanding marks.		
	C. Assess remaining skin, stringer, or frame thickness to determine maximum material removed. An ultrasonic thickness test can be used for this.		
	(1) If more than 0.004 inch of skin material has been removed from the local area, the area must be repaired or replaced.		
	(2) If more than 10% of stringer or frame material has been removed from the local area, the area must be repaired or replaced.		
	D. Clean and prime sanded areas.		
	E. Sound deadening material is for acoustic attenuation and may be replaced or omitted at owner's option.		

ACFT TYPE		5 YEAR INSPECTION REQUIREMENTS	MECH	INSP
H	29	Inspect the cabin interior skin panels, frames and stringers. Complete inspection as instructed below.		
TITLE		Fuselage Interior Skin Panels Corrosion Inspection		

EFFECTIVITY	**206 S/N**	
	20608001 and On	T20608001 and On

PURPOSE	To verify the integrity of the cabin skins, stringers and frames under and around the sound dampening material.

DOI - CESSNA 206 SERIES - 5 YEAR STRUCTURAL INSPECTION

		MECH	INSP
INSPECTION INSTRUCTIONS	A. Remove interior components of the airplane to gain access to the inside surface of the skins, stringers, and frames. Remove sound dampening material. Refer to appropriate manual for instructions.		
	B. Visually inspect the skin panels for corrosion. Particular attention should be given to inspection of panels below the windows, belly area of the fuselage, and other areas where moisture could enter or accumulate.		
	(1) Clean area before inspecting if grime or debris is present.		
	C. Inspect interior of door skins and structure for corrosion.		
	D. Inspect frames and stringers for corrosion.		
	E. Inspect cabin windows for integrity of seal to preclude entry of water into cabin.		
	F. Install the items that were removed to accomplish this inspection, refer to the applicable sections of this manual.		

ACCESS AND DETECTABLE CRACK SIZE

ACCESS/LOCATION	DETECTABLE CRACK SIZE
Fuselage Interior	Not Applicable

INSPECTION METHOD	Visual, Ultrasonic Thickness Test

		MECH	INSP
REPAIR AND MODIFICATION	A. If corrosion is found, remove corrosion by lightly sanding corroded area, taking care to remove as little material as necessary to completely remove corrosion and remaining pits in the skin.		
	B. Buff out sanding marks.		
	C. Assess remaining skin, stringer, or frame thickness to determine maximum material removed. An ultrasonic thickness test can be used for this.		
	(1) If more than 0.004 inch of skin material has been removed from the local area, the area must be repaired or replaced.		
	(2) If more than 10% of stringer or frame material has been removed from the local area, the area must be repaired or replaced.		
	D. Clean and prime sanded areas.		
	E. Sound dampening material is for acoustic attenuation and may be replaced or omitted at owner's option.		

ACFT TYPE		5 YEAR INSPECTION REQUIREMENTS	MECH	INSP
ALL	30	Inspect wing splice joint at strut attach. Complete inspection as instructed below.		
TITLE		Wing Splice Joint at Strut Attach Inspection		

	206 S/N		
EFFECTIVITY	20608001 and On	P206-0001 thru P206-0160	U206-0276 thru U206-0437
	T20608001 and On	P206-0161 thru P206-0519	U206-0438 thru U206-1234
		P206-0520 thru P20600647	U206-1235 thru U20603521
			U206-3522 thru U20607020

PURPOSE	To verify the integrity of the forward spar wing splice.

		MECH	INSP
INSPECTION INSTRUCTIONS	A. Remove the four access panels inboard and outboard of the wing strut attach fitting to gain access to the forward and aft side of the wing strut attachment. Refer to appropriate manual for instructions.		
	B. Visually inspect for corrosion at the edge of the upper and lower spar caps and the edge of the splice doublers. Refer to the figure below. In addition, confirm the spar splice does not have bulging resulting from corrosion, and does not have missing or loose fasteners.		
	C. If any of these conditions are confirmed conduct an Ultrasonic Thickness test on the area to determine if the doubler and/or spar thickness has been reduced in thickness from corrosion. Refer to appropriate manual for instructions. If testing indicates the thickness varies by more than 0.004 inch in any area contact Cessna Customer Support for additional instructions.		
	D. If corrosion is not found, install the removed access panels. Refer to appropriate manual for instructions.		

DOI - CESSNA 206 SERIES - 5 YEAR STRUCTURAL INSPECTION

ACCESS AND DETECTABLE CRACK SIZE	
ACCESS/LOCATION	**DETECTABLE CRACK SIZE**
Wing Forward Spar	Not Allowed

INSPECTION METHOD	Visual/Ultrasonic Thickness

		MECH	INSP
REPAIR AND MODIFICATION	Replace any cracked parts. If corroded, sand area lightly to remove corrosion. If more than 10% of the thickness has been removed in any one area, replace the part.		

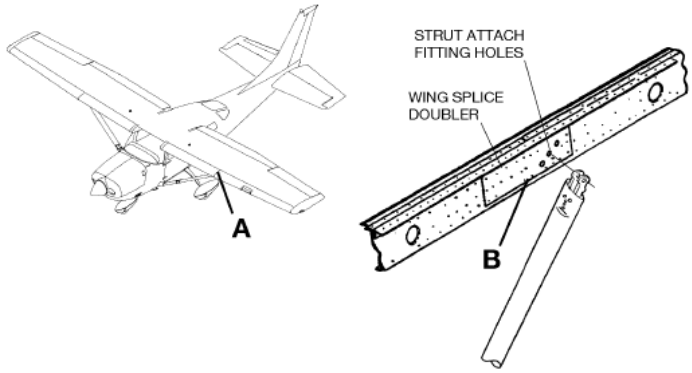

DETAIL A

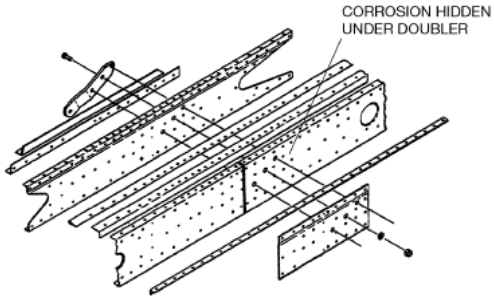

DETAIL B

WING SPLICE JOINT AT STRUT ATTACH INSPECTION

ACFT TYPE		5 YEAR INSPECTION REQUIREMENTS	MECH	INSP
H	31	Inspect wing splice joint at strut attach. Complete inspection as instructed below.		
TITLE		Wing Splice Joint at Strut Attach Inspection		

EFFECTIVITY	**206 S/N**	
	20608001 and On	T20608001 and On

PURPOSE	To ensure the structural integrity of the wing splice joint at the strut attach location.

		MECH	INSP
INSPECTION INSTRUCTIONS	A. Refer to appropriate manual for instructions, remove the four access panels inboard and outboard of the wing strut attach fitting to gain access to the forward and aft side of the wing strut attachment.		
	B. Visually inspect for corrosion at the edge of the upper and lower spar caps and the edge of the splice doublers. Refer to the figure below. In addition, confirm the spar splice does not have a bulging appearance (a bulging appearance can be caused by corrosion on the internal surfaces of the splice doublers and wing spar web). Make sure there are no signs of corrosion and there are no missing or loose fasteners.		

	MECH	INSP
C. If any of these conditions are confirmed, conduct an Ultrasonic Thickness Test on the area to determine if the doubler and/or spar thickness has been reduced in thickness from corrosion. Refer to appropriate manual for instructions. If testing indicates the thickness varies by more than 0.004 inch in any area, contact Cessna Customer Service for additional instructions.		
D. If corrosion is not found, install the items that were removed to accomplish this inspection. Refer to appropriate manual for instructions.		

ACCESS AND DETECTABLE CRACK SIZE

ACCESS/LOCATION	DETECTABLE CRACK SIZE
Wing Forward Spar	Not Allowed

INSPECTION METHOD	Visual/Ultrasonic Thickness

		MECH	INSP
REPAIR AND MODIFICATION	Replace any cracked parts. If corroded, sand area lightly to remove corrosion. If more than 10% of the thickness has been removed in any one area, replace the part.		

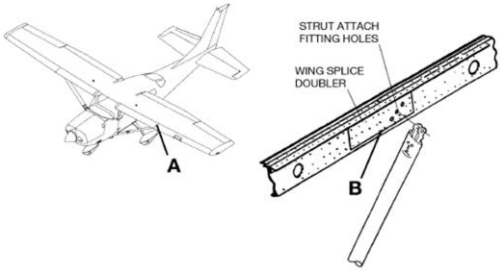

DETAIL A

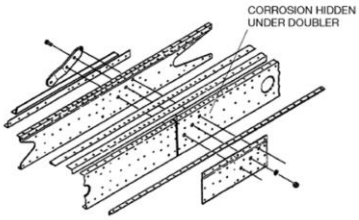

DETAIL B
WING SPLICE JOINT AT STRUT ATTACH INSPECTION

ACFT TYPE		5 YEAR INSPECTION REQUIREMENTS	MECH	INSP
206,D,E,F	32	Inspect wing for corrosion and missing or loose fasteners. Complete inspection as instructed below.		
TITLE		206 - Wing Structure Corrosion Inspection		

EFFECTIVITY	206 S/N		
	206-0001 thru 206-0275	P206-0001 thru P206-0160	U206-0276 thru U206-0437
		P206-0520 thru P20600647	U206-1235 thru U20603521

		MECH	INSP
PURPOSE	To ensure corrosion protection of the wing structure.		
INSPECTION INSTRUCTIONS	A. Open all access panels and remove all fairings and the wing tips from the wings. Refer to appropriate manual for instructions.		
	B. Visually inspect for corrosion or traces of corrosion products.		
	C. Visually inspect for open fastener holes or loose rivets in the structure. Open holes are an indication that there may be corrosion in the structure which needs to be investigated.		
	D. Use a borescope to inspect inaccessible areas.		

	MECH	INSP
(1) Some additional areas can be reached by threading the borescope probe through lightening holes in the trailing edge ahead of the flap and aileron.		
(2) During the borescope inspection, pay particular attention to rivet butts and flanges containing rivets.		
E. Install previously removed access panels, fairings, and wing tips. Refer to appropriate manual for instructions.		

ACCESS AND DETECTABLE CRACK SIZE

ACCESS/LOCATION	DETECTABLE CRACK SIZE
Wing	Not Allowed

INSPECTION METHOD	Visual, and Borescope

		MECH	INSP
REPAIR AND MODIFICATION	A. If corrosion is present, it must be removed before refinishing. The recommended procedure to remove corrosion is by hand sanding, using a fine grained sandpaper.		
	NOTE: Particularly if corrosion is detected using a borescope, significant disassembly may be required to remove corrosion, and to refinish and repair surfaces. Contact Cessna Customer Service for assistance prior to beginning the repair if the disassembly exceeds the repair facilities experience or capability.		
	B. Sand to produce a diameter-to-depth ratio of about 10:1 after polishing to a finish of 0.063 or better. Use ultrasonic methods to determine thickness after removing corrosion. Repairs are required if thickness is less than 90% of uncorroded material.		
	C. Refinish sanded areas.		
	(1) Solvent Wipe.		
	(a) Wipe off excess oil, grease or dirt from the surface to be cleaned.		
	(b) Apply solvent to a clean cloth, preferably by pouring solvent onto cloth from a safety can or other approved, labeled container. The cloth must be well saturated, but not dripping.		
	(c) Wipe surface with the moistened cloth as necessary to dissolve or loosen soil. Work a small enough area so the surface being cleaned remains wet.		
	(d) Immediately wipe the surface with a clean, dry cloth, while the solvent is still wet. Do not allow the surface to evaporate dry.		
	(e) Do steps (b) through (d) again until there is no discoloration on the drying cloth.		
	(2) Apply corrosion primer in accordance with Corrosion-Resistant Primer MIL-PRF-23377G or later.		
	(a) Mix and apply in accordance with manufacturer's instructions.		
	(b) Apply mixture with a wet cross coat to yield a dry film thickness of 0.6 to 0.8 mils.		
	(c) Allow to air dry for two to four hours.		

ACFT TYPE		5 YEAR INSPECTION REQUIREMENTS	MECH	INSP
G,H	33	Inspect wing for corrosion and missing or loose fasteners. Complete inspection as instructed below.		
TITLE		Wing Structure Corrosion Inspection		

	206 S/N	
EFFECTIVITY	20608001 and On	U206-3522 thru U20607020
	T20608001 and On	

PURPOSE	To ensure corrosion protection of the wing structure.

		MECH	INSP
INSPECTION INSTRUCTIONS	A. Open all access panels and remove all fairings and the wing tips from the wings. Refer to appropriate manual for instructions.		

	MECH	INSP
B. Visually inspect throughout the wing sections for corrosion or traces of corrosion products through the access panels and wing tips.		
(1) Clean area before inspecting if grime or debris is present.		
C. Visually inspect for open fastener holes or loose rivets in the structure. Open fastener holes are an indication that a rivet has corroded and departed the airplane.		
D. Use a borescope to inspect inaccessible areas.		
(1) Some additional areas can be reached by threading the borescope probe through lightening holes in the trailing edge ahead of the flap and aileron.		
(2) During the borescope inspection, pay particular attention to rivet butts and flanges containing rivets.		
E. Install previously removed access panels, fairings, and wing tips. Refer to appropriate manual for instructions.		

ACCESS AND DETECTABLE CRACK SIZE

ACCESS/LOCATION	DETECTABLE CRACK SIZE
Wing	Not Allowed

INSPECTION METHOD	Visual, Borescope

		MECH	INSP
REPAIR AND MODIFICATION	A. If corrosion is present, it must be removed before refinishing. The recommended procedure to remove corrosion is by hand sanding, using a fine grained sandpaper.		
	NOTE: Particularly if corrosion is detected using a borescope, significant disassembly may be required to remove corrosion, and to refinish and repair surfaces. Contact Cessna Customer Services for assistance prior to beginning the repair if the disassembly exceeds the repair facilities experience or capability.		
	B. Sand to produce a diameter-to-depth ratio of about 10:1 after polishing to a minimum RMS 63 finish. Use ultrasonic methods to determine thickness after removing corrosion. Repairs are required if thickness is less than 90% of uncorroded material.		
	C. Refinish sanded areas.		
	(1) Solvent Wipe.		
	(a) Wipe off excess oil, grease or dirt from the surface to be cleaned.		
	(b) Apply solvent to a clean cloth, preferably by pouring solvent onto cloth from a safety can or other approved, labeled container. The cloth must be well saturated, but not dripping.		
	(c) Wipe surface with the moistened cloth as necessary to dissolve or loosen soil. Work a small enough area so the surface being cleaned remains wet.		
	(d) Immediately wipe the surface with a clean, dry cloth, while the solvent is still wet. Do not allow the surface to evaporate dry.		
	(e) Do steps (b) through (d) again until there is no discoloration on the drying cloth.		
	(2) Apply corrosion primer in accordance with Corrosion-Resistant Primer MIL-PRF-23377G or later.		
	(a) Mix and apply in accordance with manufacturer's instructions.		
	(b) Apply mixture with a wet cross coat to yield a dry film thickness of 0.6 to 0.8 mils.		
	(c) Allow to air dry for two to four hours.		

ACFT TYPE		5 YEAR INSPECTION REQUIREMENTS	MECH	INSP
A,B,C	34	Inspect wing splice joint. Complete inspection as instructed below.		
TITLE		A,B,C - Wing Splice Joint at Strut Attach Inspection		

EFFECTIVITY	**206 S/N**	
	P206-0161 thru P206-0519	U206-0438 thru U206-1234

DOI - CESSNA 206 SERIES - 5 YEAR STRUCTURAL INSPECTION

PURPOSE	To verify the integrity of the forward spar wing splice.

		MECH	INSP
INSPECTION INSTRUCTIONS	A. Remove the four access panels inboard and outboard of the wing strut attach fitting to gain access to the forward and aft side of the wing strut attachment. Refer to appropriate manual for instructions.		
	B. Visually inspect for corrosion at the edge of the upper and lower spar caps and the edge of the splice doublers. Refer to the figure below. In addition, confirm the spar splice does not have bulging resulting from corrosion, and does not have missing or loose fasteners.		
	C. If any of these conditions are confirmed conduct an Ultrasonic Thickness test on the area to determine if the doubler and/or spar thickness has been reduced in thickness from corrosion. Refer to appropriate manual for instructions. If testing indicates the thickness varies by more than 0.004 inch in any area contact Cessna Customer Support for additional instructions.		
	D. If corrosion is not found, install the removed access panels. Refer to appropriate manual for instructions.		

ACCESS AND DETECTABLE CRACK SIZE

ACCESS/LOCATION	DETECTABLE CRACK SIZE
Wing Forward Spar	Not Allowed

INSPECTION METHOD	Visual/Ultrasonic Thickness

		MECH	INSP
REPAIR AND MODIFICATION	Replace any cracked parts. If corroded, sand area lightly to remove corrosion. If more than 10% of the thickness has been removed in any one area, replace the part.		

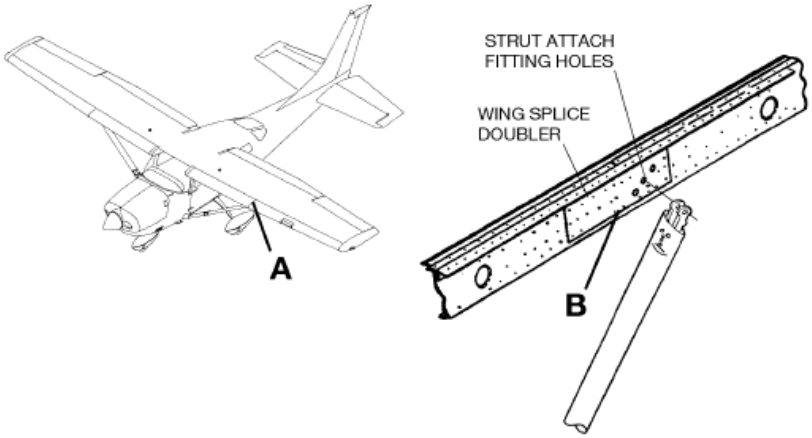

DETAIL A

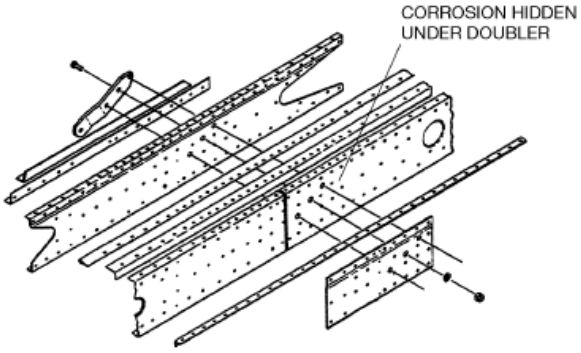

DETAIL B

WING SPLICE JOINT AT STRUT ATTACH INSPECTION

DOI - CESSNA 206 SERIES - 5 YEAR STRUCTURAL INSPECTION

ACFT TYPE		5 YEAR INSPECTION REQUIREMENTS	MECH	INSP
ALL	35	Inspect rudder pedal torque tube and cable attachment arms. Complete inspection as instructed below.		
TITLE		Rudder Pedal Torque Tube Inspection		

EFFECTIVITY	**206 S/N**		
	20608001 and On	P206-0001 thru P206-0160	U206-0276 thru U206-0437
	T20608001 and On	P206-0161 thru P206-0519	U206-0438 thru U206-1234
		P206-0520 thru P20600647	U206-1235 thru U20603521
			U206-3522 thru U20607020

PURPOSE	To verify integrity of the rudder pedal torque tube assembly.

		MECH	INSP
INSPECTION INSTRUCTIONS	A. Inspect rudder pedal torque tubes for rust, corrosion and/or cracking. Refer to the figure below.		
	(1) Clean area before inspecting if grime or debris is present.		
	B. Inspect the cable and pedal attachment arms for wear, cracks, and/or weld failures.		
	(1) Clean area before inspecting if grime or debris is present.		
	C. Inspect the rudder bar support brackets for cracks at the bend radii in the mounting flange.		
	D. Confirm the integrity of the cable and pedal attachments to the rudder bars.		

ACCESS AND DETECTABLE CRACK SIZE

ACCESS/LOCATION	DETECTABLE CRACK SIZE
Fuselage, Near Forward Firewall	Not Allowed

INSPECTION METHOD	Visual

		MECH	INSP
REPAIR AND MODIFICATION	Typical failures occur at or close to welds in the rudder bar. Since the rudder bar is not heat treated after welding, it can be rewelded and used without subsequent heat treatment. Examine the rewelded area after welding for any new or additional cracking. Make other repairs by replacing damaged or missing parts with spare parts. Make repairs IAW the applicable manual. Coordinate any repair not available in the manual with Cessna Customer Service prior to beginning the repair.		

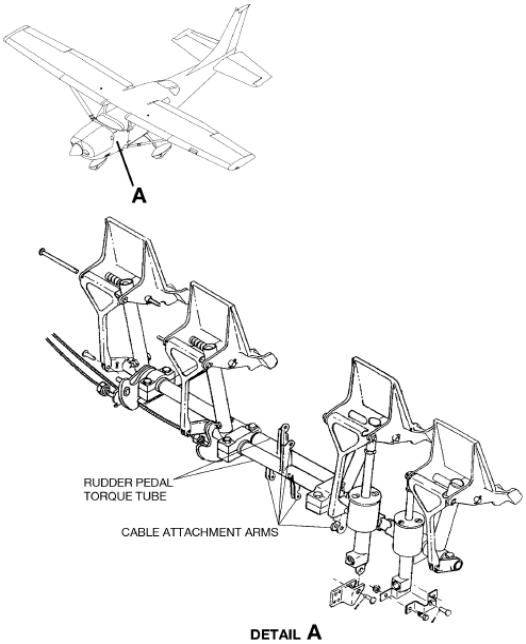

DETAIL A
RUDDER PEDAL TORQUE TUBE INSPECTION

DOI - CESSNA 206 SERIES - 5 YEAR STRUCTURAL INSPECTION

ACFT TYPE		5 YEAR INSPECTION REQUIREMENTS	MECH	INSP
A,B,C	36	Inspect horizontal stabilizer and elevator, including spars, ribs, hinge bolts, hinge bearing, attachments and torque tube. Complete inspection as instructed below.		
TITLE		Horizontal Stabilizer, Elevators and Attachments Inspection		

EFFECTIVITY	**206 S/N**	
	P206-0161 thru P206-419	U206-0438 thru U206-0914

		MECH	INSP
PURPOSE	To inspect horizontal stabilizer, elevator and attachments for signs of damage, fatigue or deterioration.		
INSPECTION INSTRUCTIONS	A. Remove the elevators and stabilizer. Refer to appropriate manual for instructions.		
	NOTE: This requires removal of the vertical tail.		
	B. Open all stabilizer and elevator access panels. Refer to the applicable Model 200 Series Service Manual.		
	(1) Clean areas before inspecting if dirt and debris are present.		
	C. Visually inspect stabilizer and elevator for condition, cracks and security; hinge bolts, hinge bearings for condition and security; bearings for freedom of rotation; attach fittings for evidence of damage, wear, failed fasteners and security. Refer to the figure below. Pay particular attention to the flange riveted onto the torque tube near the airplane centerline, and the inside of the torque tube along the lower surface where water could accumulate.		
	(1) If corrosion or a frozen bearing is found, conduct a surface eddy current inspection for cracks of each elevator hinge attach fitting. Refer to appropriate manual for instructions. The inspection is for the aluminum structure outside of the bearing, so set the instrument for aluminum. The hinge may be replaced in lieu of eddy current testing.		
	D. Visually inspect the front and aft sides of the front spar. A flashlight and inspection mirror or a borescope will aid in this inspection.		
	E. Visually inspect forward and aft stabilizer and elevator spars, ribs, and attach fittings for cracks, corrosion, loose fasteners, elongated fastener attach holes, cracking and deterioration. Pay particular attention to the skins at the location where stringers pass through ribs and the leading edge skin close to the fuselage. Apply finger pressure at the stringer intersection or the rib to spar juncture to check for free play indicating a broken rib. Visually inspect the forward stabilizer attachment bulkhead and stabilizer attach fittings for loose rivets and cracks.		
	F. Inspection inside the stabilizer for corrosion		
	(1) Use a borescope to view the interior of the stabilizer. Access the interior through any available access holes, and through the lightening holes in the stabilizer rear spar.		
	(2) Pay particular attention to rivet butts and flanges containing rivets.		
	G. Install the horizontal stabilizer, elevator and all previously removed access panels. Refer to appropriate manual for instructions.		

ACCESS AND DETECTABLE CRACK SIZE

ACCESS/LOCATION	DETECTABLE CRACK SIZE
Horizontal Tail	Not Allowed

INSPECTION METHOD	Visual, and Eddy Current

		MECH	INSP
REPAIR AND MODIFICATION	Replace damaged bolts and nuts. Replace damaged fittings and small parts. Replace damaged or loose rivets. Repairs may be made IAW the appropriate manual. Any repair not available in the manual should be coordinated with Cessna Customer Service prior to beginning the repair.		

DOI - CESSNA 206 SERIES - 5 YEAR STRUCTURAL INSPECTION

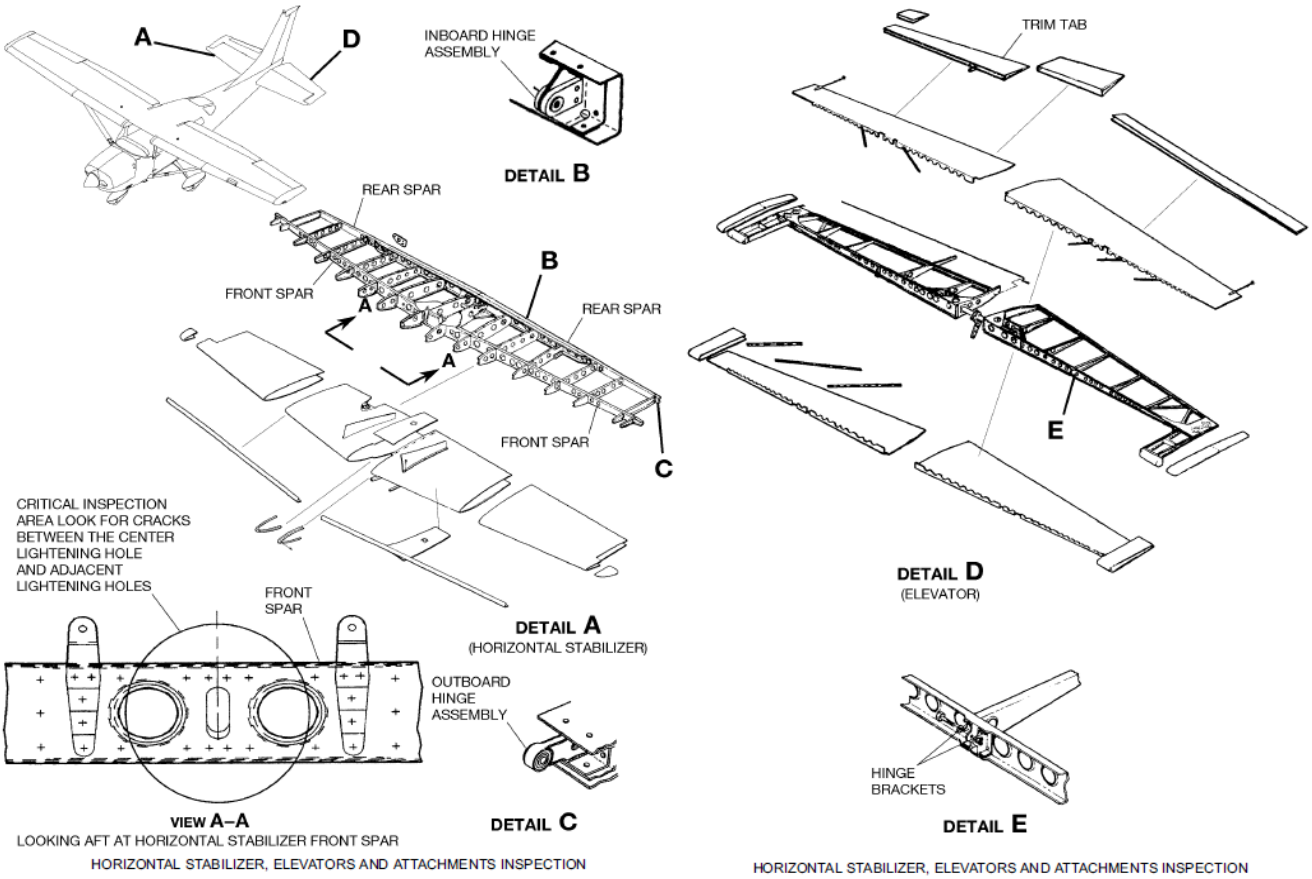

ACFT TYPE		5 YEAR INSPECTION REQUIREMENTS	MECH	INSP
D,E,F,G	37	Inspect horizontal stabilizer and elevator, including spars, ribs, hinge bolts, hinge bearings, attach fittings and torque tube. Complete inspection as instructed below.		
TITLE		Horizontal Stabilizer, Elevators and Attachments Inspection		

EFFECTIVITY	**206 S/N**	
	P206-0520 thru P20600647	U206-1235 thru U20603521
		U206-3522 thru U20607020

		MECH	INSP
PURPOSE	To inspect horizontal stabilizer, elevator and attachments for signs of damage, cracking or deterioration.		
INSPECTION INSTRUCTIONS	A. Remove the elevators and stabilizer. Refer to appropriate manual for instructions.		
	B. Open all stabilizer and elevator access panels. Refer to appropriate manual for instructions.		
	(1) Clean area before inspecting if grime or debris is present.		
	C. Visually inspect stabilizer and elevator for condition, cracks and security; hinge bolts, hinge bearings for condition and security; bearings for freedom of rotation; attach fittings for evidence of damage, cracks, wear, failed fasteners and security. Refer to the figure below.		
	(1) Clean area before inspecting if grime or debris is present.		
	D. Visually inspect the torque tube for corrosion and rivet security. Pay particular attention to the flange riveted onto the torque tube near the airplane centerline, and the inside of the torque tube along the lower surface where water could accumulate.		

	MECH	INSP
(1) Clean area before inspecting if grime or debris is present.		
E. Review the aircraft records to determine if SE84-17 has been complied with. If it has NOT, carefully examine the reinforcement approximately 4 inches from the aircraft centerline on the stabilizer rear spar for cracks. Install the reinforcement if flight hours exceed 2,000 hours.		
NOTE: If there is any doubt that SE84-17 has been complied with, the original reinforcement was aluminum, while the replacement is steel, so if the reinforcement is magnetic, the reinforcement has been replaced.		
F. Review the aircraft records to determine if SEB88-03 has been complied with, or Service Kit SK210-126 has been installed. If it has NOT, carefully examine the reinforcement approximately 3 inches from the aircraft centerline on the stabilizer front spar for cracks. Install the reinforcement if flight hours exceed 2,000 hours.		
NOTE: If there is any doubt that SEB88-03 has been complied with, the original reinforcement was smooth, while the replacement is stepped.		
G. Visually inspect forward and aft stabilizer and elevator spars, ribs and attach fittings for cracks, corrosion, loose fasteners, elongated fastener attach holes, cracking and deterioration. Pay particular attention to the skins at the location where stringers pass through ribs and at the leading edge skin close to the fuselage. Apply finger pressure at the stringer intersection or the rib to spar juncture to check for free play indicating a broken rib. Visually inspect the forward stabilizer attachment bulkhead and stabilizer attach fittings for loose rivets and cracks.		
(1) Clean area before inspecting if grime or debris is present.		
(2) Use a borescope if necessary to view the interior of the stabilizer through any available access holes and through the lightening holes in the stabilizer rear spar.		
(3) Visually inspect the front and aft sides of the front spar in the area of the three lightening holes close to the center of the stabilizer. A light and inspection mirror should be used to inspect the aft side of the spar. Cracks tend to be horizontal near the ends of the trim tab cable slot, but may be anywhere. Refer to the figure below, View A-A. The mostly hidden middle layer may also be cracked.		
H. If corrosion or a frozen bearing is found, conduct a surface eddy current inspection for cracks of each elevator hinge attach fitting. Refer to appropriate manual for instructions. The inspection is for the aluminum structure outside of the bearing, so set the instrument for aluminum. The hinge may be replaced in lieu of eddy current testing.		
I. Balance the elevator in accordance with the applicable Model 206 Service Manual.		
J. Install the horizontal stabilizer, elevator and all previously removed access panels according to the applicable Manual.		

ACCESS AND DETECTABLE CRACK SIZE

ACCESS/LOCATION	DETECTABLE CRACK SIZE
Horizontal Tail	Not Allowed

INSPECTION METHOD	Visual, Borescope and Eddy Current if required.

		MECH	INSP
REPAIR AND MODIFICATION	Replace damaged bolts and nuts. Replace damaged fittings and small parts. Replace damaged or loose rivets. If the front spar is cracked, a new front spar (P/N 1232622-23) is available to replace the older part. If the reinforcement on the rear spar is cracked, P/N 1232624-1 reinforcement is available to replace it. If the stabilizer attach fitting is cracked, SK210-126 is available to replace a cracked fitting. Hinge bearings are pre-packed with grease, which will eventually oxidize and harden after years of service. Several applications of penetrating oil will help free up a stiff bearing. It is the owner/operator option to replace stiff bearings. Modification Kit MK210-126 is available to repair damage to the horizontal tail front spar. Repairs may be made IAW the applicable manual. Any repair not available in the manual should be coordinated with Cessna Customer Service prior to beginning the repair.		

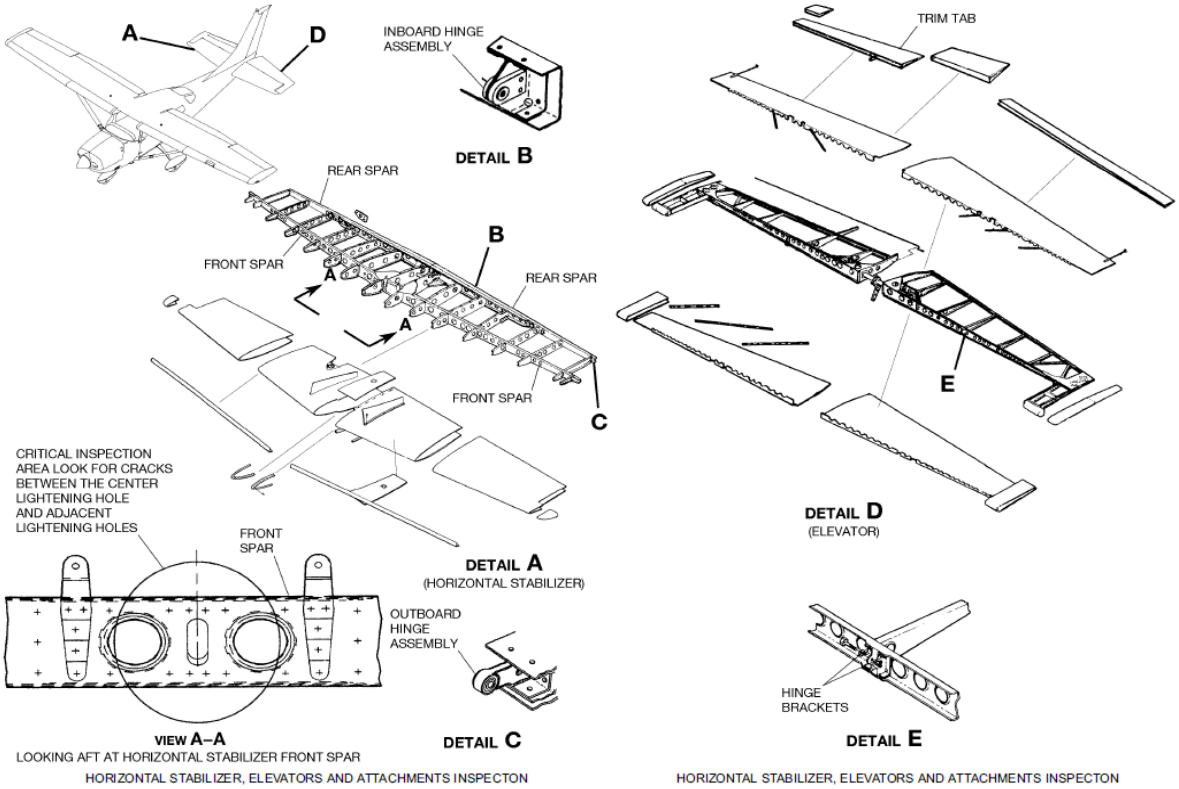

ACFT TYPE		5 YEAR INSPECTION REQUIREMENTS	MECH	INSP
H	37	Inspect the horizontal stabilizer and elevator, including spars, ribs, hinge bolts, hinge bearings, attach fittings and torque tube. Complete inspection as instructed below.		
TITLE		Horizontal Stabilizer, Elevators and Attachments Inspection		

EFFECTIVITY	**206 S/N**	
	20608001 and On	T20608001 and On

PURPOSE	To inspect horizontal stabilizer, elevator and attachments for signs of damage, cracking or deterioration.

		MECH	INSP
INSPECTION INSTRUCTIONS	A. For airplanes affected by Service Bulletin SB00-55-03, review the airplane maintenance records to verify that Service Bulletin SB00-55-03 has been complied with. For airplanes affected by Service Bulletin SB00-55-03 but are not in compliance with this service bulletin, comply with SB00-55-03 concurrent with this inspection.		
	B. Remove all stabilizer and elevator access panels, including the stinger and vertical stabilizer to horizontal stabilizer fairings. Refer to appropriate manual for instructions.		
	C. Do a visual inspection of the stabilizer and elevator for condition, cracks and security; hinge bolts, hinge bearings for condition and security, bearings for freedom of rotation, attach fittings for evidence of damage, cracks, wear, failed fasteners and security.		
	(1) Clean the area before inspecting if grime or debris is present.		
	D. Visually inspect the torque tube for corrosion and rivet security. Pay particular attention to the flange riveted onto the torque tube near the airplane centerline and the inside of the torque tube along the lower surface where water could accumulate.		
	(1) Clean the area before inspecting if grime or debris is present.		
	E. Visually inspect the forward and aft stabilizer and elevator spars, ribs and attach fittings for cracks, corrosion, loose fasteners, elongated fastener attach holes, cracking and deterioration. Pay particular attention to the skins at the location where stringers pass through ribs and at the leading edge skin close to the fuselage. Apply finger pressure at the stringer intersection or the rib to spar juncture to check for free play indicating a broken rib. Visually inspect the forward stabilizer attachment bulkhead for cracks.		

	MECH	INSP
(1) Clean the area before inspecting if grime or debris is present.		
(2) Use a borescope if necessary to view the interior of the stabilizer through any available access holes and through the lightening holes in the stabilizer rear spar.		
(3) Visually inspect the front and aft sides of the front spar in the area of the three lightening holes close to the center of the stabilizer. A light and inspection mirror should be used to inspect the aft side of the spar. Cracks tend to be horizontal near the ends of the trim tab cable slot, but may be anywhere.		
F. If corrosion or a frozen bearing is found, conduct a surface eddy current inspection for cracks of each elevator hinge attach fitting. Refer to appropriate manual for instructions. The inspection is for the aluminum structure outside of the bearing, make sure the instrument is set for inspecting aluminum material. The hinge may be replaced in lieu of this eddy current test.		
G. Visually inspect the trailing edge portion of the elevator for indications of cracks, corrosion or deterioration. Visually inspect the attachment of the trim tab horn to the trim tab.		
H. Install the items that were removed to accomplish this inspection, refer to the applicable sections of this manual.		

ACCESS AND DETECTABLE CRACK SIZE

ACCESS/LOCATION	DETECTABLE CRACK SIZE
Horizontal Stabilizer	Not Allowed

INSPECTION METHOD	Visual, Borescope and Eddy Current if required.

		MECH	INSP
REPAIR AND MODIFICATION	Replace damaged bolts and nuts. Replace damaged fittings and small parts. Replace damaged or loose rivets. Several applications of penetrating oil will help free up a stiff bearing. It is the owner/operator option to replace stiff bearings. Make repairs IAW the applicable manual. Coordinate any repair not available in the manual with Cessna Customer Service prior to beginning the repair.		

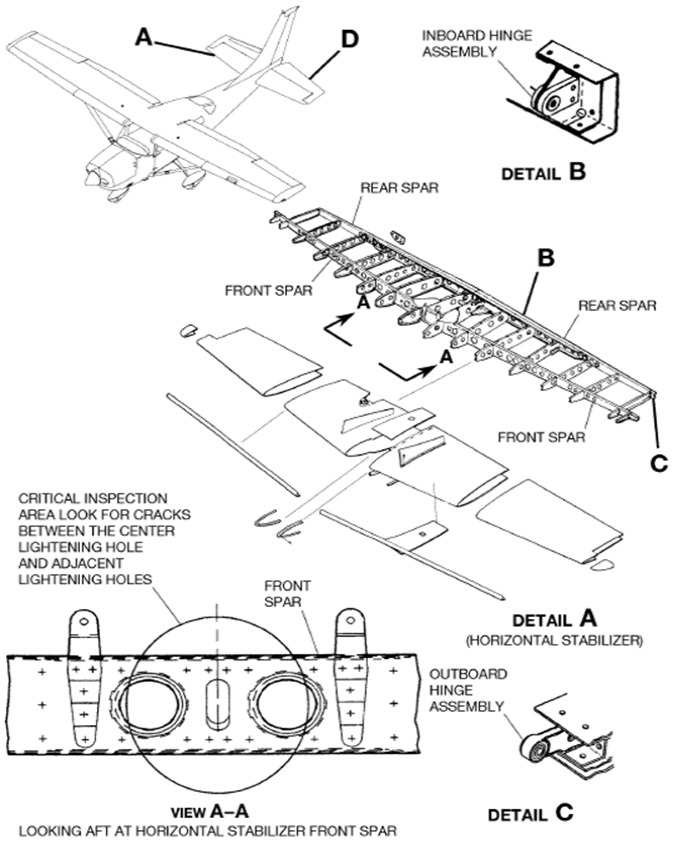

HORIZONTAL STABILIZER, ELEVATORS AND ATTACHMENTS INSPECTION

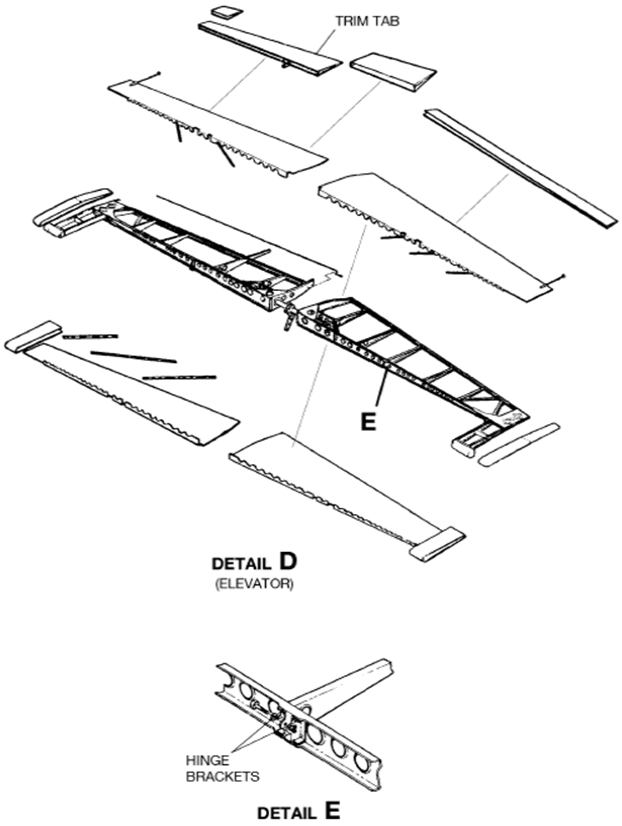

HORIZONTAL STABILIZER, ELEVATORS AND ATTACHMENTS INSPECTION

DOI - CESSNA 206 SERIES - 5 YEAR STRUCTURAL INSPECTION

ACFT TYPE		5 YEAR INSPECTION REQUIREMENTS	MECH	INSP
ALL	38	Inspect vertical stabilizer and rudder structure and attachments. Complete inspection as instructed below.		
TITLE		Vertical Stabilizer, Rudder and Attachments Inspection		

EFFECTIVITY	**206 S/N**		
	206-0001 thru 206-0275	P206-0001 thru P206-0160	U206-0276 thru U206-0437
	20608001 and On	P206-0161 thru P206-0519	U206-0438 thru U206-1234
	T20608001 and On	P206-0520 thru P20600647	U206-1235 thru U20603521
			U206-3522 thru U20607020

PURPOSE	To inspect vertical stabilizer, rudder and attachments for signs of damage, cracks or deterioration.

		MECH	INSP
INSPECTION INSTRUCTIONS	A. Remove rudder from airplane and open all vertical stabilizer and rudder access panels. Refer to appropriate manual for instructions.		
	B. Visually inspect vertical stabilizer and rudder for condition, cracks and security; rudder hinges for condition, cracks and security; hinge bolts, hinge bearings for condition and security; bearings for freedom of rotation; attach fittings for evidence of damage, wear, failed fasteners and security. Refer to the figure below.		
	(1) Clean area before inspecting if grime or debris is present.		
	C. Using a borescope, inspect forward and aft vertical stabilizer and rudder spars, ribs and attach fittings for cracks, corrosion, loose fasteners, elongated fastener attach holes, cracks and deterioration.		
	(1) Clean area before inspecting if grime or debris is present.		
	D. Inspect rudder for deterioration resulting from fatigue, wear, overload, wind damage, and corrosion.		
	E. Inspect skins, spars, and ribs for cracks, corrosion and working fasteners. Pay particular attention to the skins at the location where stringers pass through ribs. Apply finger pressure at the intersection to check for free play indicating a broken rib.		
	F. If corrosion or a frozen bearing is found in B. above, replace the rudder hinge or conduct a surface eddy current inspection for cracks of each rudder hinge attach fitting. Refer to appropriate manual for instructions. The inspection is for the aluminum structure outside of the bearing, so set the instrument for aluminum.		
	G. Install rudder and all previously removed access panels. Refer to appropriate manual for instructions.		

ACCESS AND DETECTABLE CRACK SIZE

ACCESS/LOCATION	DETECTABLE CRACK SIZE
Vertical Stabilizer, Rudder and Stabilizer Attachment	Not Allowed

INSPECTION METHOD	Visual with Eddy Current if required

		MECH	INSP
REPAIR AND MODIFICATION	Replace damaged bolts and nuts. Replace damaged fittings and small parts. Replace damaged or loose rivets. Hinge bearings are prepacked with grease, which will eventually oxidize and harden after years of service. Several applications of penetrating oil will help free up a stiff bearing. It is the owner/operators option to replace stiff bearings. Repairs may be made IAW the appropriate manual. Any repair not available in the manual should be coordinated with Cessna Customer Service prior to beginning the repair.		

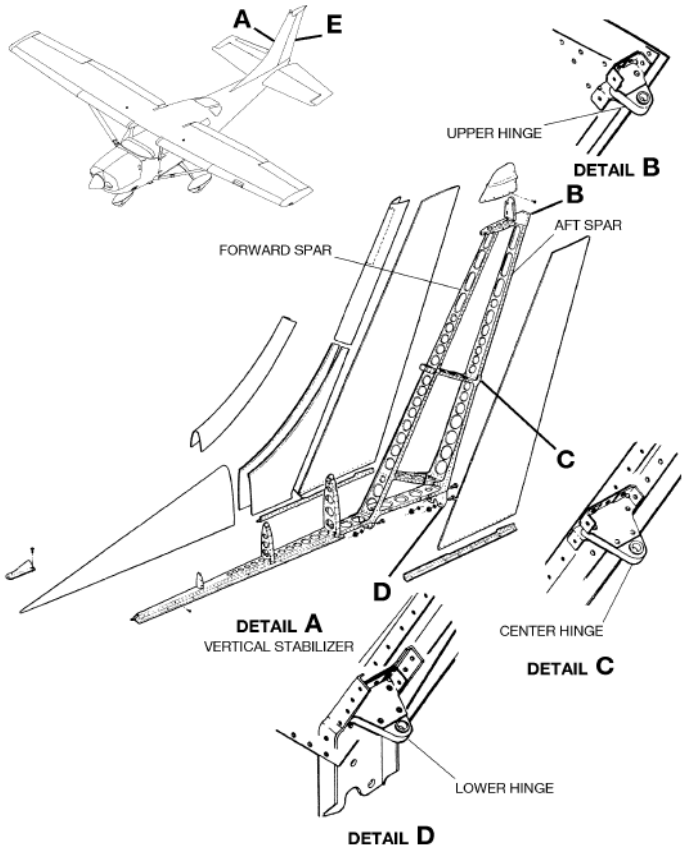

VERTICAL STABILIZER, RUDDER AND ATTACHMENTS INSPECTION

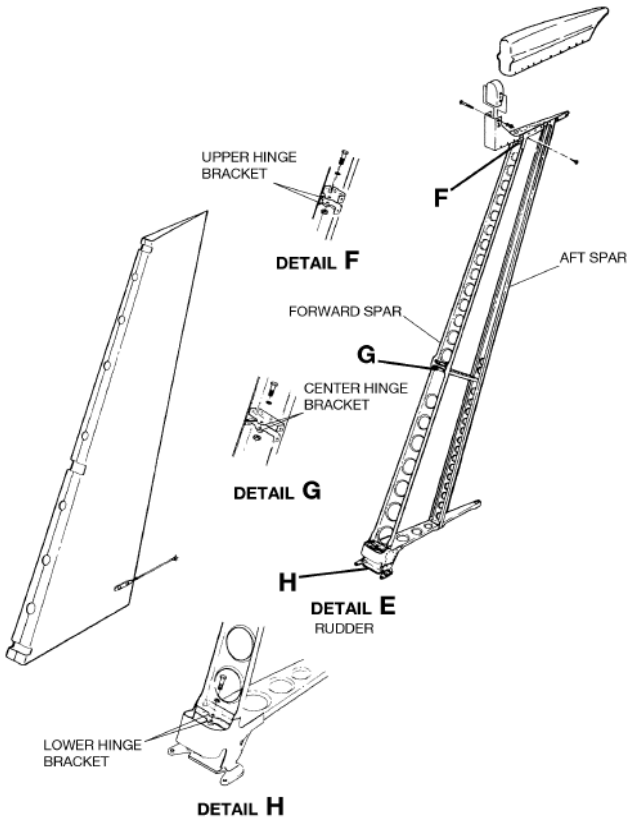

VERTICAL STABILIZER, RUDDER AND ATTACHMENTS INSPECTION

DOI - CESSNA 206 SERIES - 5 YEAR STRUCTURAL INSPECTION

ZONE	ACFT TYPE		5 YEAR STRUCTURAL INSPECTION REQUIREMENTS	MECH	INSP
ARCTIC		39			
ARCTIC		40			
ARCTIC		41			
ARCTIC		42			
ARCTIC		43			
ARCTIC		44			
ARCTIC		45			
ARCTIC		46			
ARCTIC		47			
ARCTIC		48			
ARCTIC		49			
ARCTIC		50			
ARCTIC		51			
TEMPERATE		52			
TEMPERATE		53			
TEMPERATE		54			
TEMPERATE		55			
TEMPERATE		56			
TEMPERATE		57			
TEMPERATE		58			
TEMPERATE		59			
TEMPERATE		60			
TEMPERATE		61			
TEMPERATE		62			
TEMPERATE		63			
TEMPERATE		64			
TEMPERATE		65			
TEMPERATE		66			
TEMPERATE		67			
	ALL	68	All panels opened for the inspection are closed and secure.		
	ALL	69	Run aircraft engine and leak check.		

DOI - CESSNA 206 SERIES - 5 YEAR STRUCTURAL INSPECTION

NOTES:

ASSURE PROPER MAINTENANCE RECORD ENTRIES HAVE BEEN MADE IAW 14 CFR 43.9

THE AIRCRAFT RECORDS CONSIST OF THE FOLLOWING;

1. AIRCRAFT, ENGINE & PROPELLER HARD LOGS.
2. ALL FORM 337'S, MAJOR REPAIR & ALTERATION.
3. COMPLIANCE LIST OF ALL PERTINENT AIRWORTHINESS DIRECTIVES.
4. MAINTENANCE SCHEDULE- LIST OF REQUIRED SPECIAL INSPECTIONS, COMPONENT OVERHAUL & TIME-LIFE LIMITS.
5. CURRENT & HISTORICAL WEIGHT & BALANCE STATUS & EQUIPMENT LIST
6. MINIMUM EQUIPMENT LIST AS REQUIRED.
7. SPECIAL FLIGHT AUTHORIZATIONS AND/OR SUPPLEMENTS

UNITED STATES DEPARTMENT OF THE INTERIOR

CESSNA 206 SERIES

500 HOUR SCHEDULED MAINTENANCE CHECKS

THE INSPECTION WORK SHEETS / PACKAGES IN THIS DOCUMENT ARE FOR THE 'UNITED STATES DEPARTMENT OF THE INTERIOR' AIRCRAFT ONLY.

Inspection Sheet - Block Explanation

Example

ACFT TYPE		EXAMPLE INSPECTION REQUIREMENTS	MECH	INSP
ALL	1	Engine - Inspect for evidence of oil and fuel leaks. Wash engine/engine compartment if needed.		
H	2	Idle and Mixture Adjustment - Check idle speed and idle mixture (lean rise). Adjust if necessary.		
A,B,C,D,E,F	3	Turbocharger pressurized vent lines to fuel pump, discharge nozzles and fuel flow gage.	N/A	
A	**B**	**C**	**D**	**E**

Block A All - All Cessna aircraft in the 206 Series (all models).

Other than 'All' designated with the specific 206 model.

Block B Each inspection and task is given a line item number in the 2nd column.

Block C Describes inspection tasks.

Block D Mechanic sign-off block. N/A (Not Applicable) - should be used if the inspection cannot or should not be carried out due to (but not limited to) - 1. Serial number range. 2. Unit or option not installed on aircraft. 3. Previously complied with. 4. Climate zone applicability. A note beside the N/A to indicate the reason for it is recommended.

Block E

The (white) INSP block should be initialed by an inspector who witnessed the task carried out by the mechanic and completed a final inspection and/or functional check in accordance with the line item requirements and relevant technical publications. The inspector shall not initial the INSP block until after the mechanic has initialed the MECH block. In a block that requires a Maintenance Inspector, he shall initial the white INSP block whenever N/A has been entered in the MECH block.

Climate Zone Supplemental Inspections and Servicing

Before commencing inspection and servicing, it must be confirmed which climate zone the subject aircraft is operated in. If the aircraft is above the 49th parallel it is in the Arctic Zone. If the aircraft is below the 49th parallel it is in the Temperate zone. The extra line items listed for the appropriate climate zone shall be added to the servicing, the not applicable climate zone line items shall be noted as N/A in the sign-off block.

Inspections: To be completed in accordance with this manual.

Repairs: To be completed in accordance with the appropriate Cessna Maintenance Manual.

Acronyms in use

IAW - In Accordance With

CPCP - Corrosion Prevention and Control Program

NDI - Non Destructive Inspection

ICA - Instructions for Continued Airworthiness

STC - Supplemental Type Certificate

PSE - Principle Structural Element

N/A - Not Applicable (see MECH Block D above)

OEM - Original Equipment Manufacturer

DOI - CESSNA 206 SERIES - 500 HOUR INSPECTION

'N' NUMBER:_____ MODEL: _____ AIRCRAFT S/N:_____

TACH HOURS:_____ AIRCRAFT TOTAL TIME:_____ ENG. SMOH:_____ PROP SMOH:_____

ACFT TYPE		500 HOUR STRUCTURAL INSPECTION REQUIREMENTS	MECH	INSP
206,A,B,C,G,H	1	Inspect firewall. 1. Inspect around exhaust hanger brackets for cracks. 2. Inspect webs and around stiffeners for cracks. Complete inspection as instructed below.		
TITLE		Firewall Inspection		

EFFECTIVITY	**206 S/N**		
	206-0001 thru 206-0275	P206-0001 thru P206-0160	U206-0276 thru U206-0437
	20608001 and On	P206-0161 thru P206-0519	U206-0438 thru U206-1234
	T20608001 and On		U206-3522 thru U20607020

PURPOSE	To verify the integrity of the firewall.

		MECH	INSP
INSPECTION INSTRUCTIONS	A. Remove the upper and lower engine cowlings from the airplane. Refer to appropriate manual for instructions.		
	B. Disconnect all electrical power from the airplane.		
	C. Visually inspect around each exhaust mount attach bracket and exhaust pipe support for cracking on forward side of the firewall.		
	(1) Clean the area before inspecting if grime or debris is present.		
	D. Inspect the firewall for wrinkles, cracks, sheared rivets, or other signs of damage or wear.		
	E. Install the items that were removed to accomplish this inspection. Refer to appropriate manual for instructions.		

ACCESS AND DETECTABLE CRACK SIZE

ACCESS/LOCATION	DETECTABLE CRACK SIZE
Engine compartment	Not Applicable

INSPECTION METHOD	Visual

		MECH	INSP
REPAIR AND MODIFICATION	A. If cracks are found, make repairs IAW the applicable manual. Coordinate any repair not available in the manual with Cessna Customer Service prior to beginning the repair. Note that the firewall is stainless steel, and repair materials and fasteners must be made of like materials.		

DOI - CESSNA 206 SERIES - 500 HOUR STRUCTURAL INSPECTION

ZONE	ACFT TYPE		500 HOUR STRUCTURAL INSPECTION REQUIREMENTS	MECH	INSP
ARCTIC		2			
ARCTIC		3			
ARCTIC		4			
ARCTIC		5			
ARCTIC		6			
ARCTIC		7			
ARCTIC		8			
ARCTIC		9			
ARCTIC		10			
ARCTIC		11			
ARCTIC		12			
ARCTIC		13			
ARCTIC		14			
TEMPERATE		15			
TEMPERATE		16			
TEMPERATE		17			
TEMPERATE		18			
TEMPERATE		19			
TEMPERATE		20			
TEMPERATE		21			
TEMPERATE		22			
TEMPERATE		23			
TEMPERATE		24			
TEMPERATE		25			
TEMPERATE		26			
TEMPERATE		27			
TEMPERATE		28			
TEMPERATE		29			
TEMPERATE		30			
	ALL	31	All panels opened for the inspection are closed and secure.		
	ALL	32	Run aircraft engine and leak check.		

DOI - CESSNA 206 SERIES - 500 HOUR STRUCTURAL INSPECTION

NOTES:

UNITED STATES DEPARTMENT OF THE INTERIOR

CESSNA 206 SERIES

1000 HOUR SCHEDULED MAINTENANCE CHECKS

THE INSPECTION WORK SHEETS / PACKAGES IN THIS DOCUMENT ARE FOR THE 'UNITED STATES DEPARTMENT OF THE INTERIOR' AIRCRAFT ONLY.

Inspection Sheet - Block Explanation

Example

ACFT TYPE		EXAMPLE INSPECTION REQUIREMENTS	MECH	INSP
ALL	1	Engine - Inspect for evidence of oil and fuel leaks. Wash engine/engine compartment if needed.		
H	2	Idle and Mixture Adjustment - Check idle speed and idle mixture (lean rise). Adjust if necessary.		
A,B,C,D,E,F	3	Turbocharger pressurized vent lines to fuel pump, discharge nozzles and fuel flow gage.	N/A	
A	**B**	**C**	**D**	**E**

Block A All - All Cessna aircraft in the 206 Series (all models).

Other than 'All' designated with the specific 206 model.

Block B Each inspection and task is given a line item number in the 2nd column.

Block C Describes inspection tasks.

Block D Mechanic sign-off block. N/A (Not Applicable) - should be used if the inspection cannot or should not be carried out due to (but not limited to) - 1. Serial number range. 2. Unit or option not installed on aircraft. 3. Previously complied with. 4. Climate zone applicability. A note beside the N/A to indicate the reason for it is recommended.

Block E The (white) INSP block should be initialed by an inspector who witnessed the task carried out by the mechanic and completed a final inspection and/or functional check in accordance with the line item requirements and relevant technical publications. The inspector shall not initial the INSP block until after the mechanic has initialed the MECH block. In a block that requires a Maintenance Inspector, he shall initial the white INSP block whenever N/A has been entered in the MECH block.

Climate Zone Supplemental Inspections and Servicing

Before commencing inspection and servicing, it must be confirmed which climate zone the subject aircraft is operated in. If the aircraft is above the 49th parallel it is in the Arctic Zone. If the aircraft is below the 49th parallel it is in the Temperate zone. The extra line items listed for the appropriate climate zone shall be added to the servicing, the not applicable climate zone line items shall be noted as N/A in the sign-off block.

Inspections: To be completed in accordance with this manual.

Repairs: To be completed in accordance with the appropriate Cessna Maintenance Manual.

Acronyms in use

IAW - In Accordance With

CPCP - Corrosion Prevention and Control Program

NDI - Non Destructive Inspection

ICA - Instructions for Continued Airworthiness

STC - Supplemental Type Certificate

PSE - Principle Structural Element

N/A - Not Applicable (see MECH Block D above)

OEM - Original Equipment Manufacturer

DOI - CESSNA 206 SERIES - 1000 HOUR INSPECTION

'N' NUMBER:_____ MODEL: _____ AIRCRAFT S/N:_____

TACH HOURS:_____ AIRCRAFT TOTAL TIME:_____ ENG. SMOH:_____ PROP SMOH:_____

ACFT TYPE		**1000 HOUR STRUCTURAL INSPECTION REQUIREMENTS**	MECH	INSP
H	1	Engine Mount Structure, Tunnel and Sidewalls - Inspect for general condition.		
ALL	2	1. Inspect inboard wing structure and wing attachment to fuselage including working rivets. 2. Inspect flap actuator support structure. Complete inspection as instructed below.		
TITLE		Wing Structure Inspection		

EFFECTIVITY	**206 S/N**		
	206-0001 thru 206-0275	P206-0001 thru P206-0160	U206-0276 thru U206-0437
	20608001 and On	P206-0161 thru P206-0519	U206-0438 thru U206-1234
	T20608001 and On	P206-0520 thru P20600647	U206-1235 thru U20603521
			U206-3522 thru U20607020

PURPOSE	To ensure structural integrity of the wing.

		MECH	INSP
INSPECTION INSTRUCTIONS	A. Remove all access panels, fairings and the wing tips from the wings, refer to the applicable sections of this manual.		
	B. Visual Inspection		
	(1) Clean the area before inspecting if grime or debris is present.		
	(2) Do a visual inspection of the wing structure for damage, corroded or cracked parts. Use a borescope or magnifying glass where required.		
	(a) Pay particular attention to the wing attach area. Visually inspect both the fuselage and wing where the wing attaches to the carry-thru spar in the fuselage, refer to the figure below.		
	(b) Visually inspect for working rivets at the inboard portion of the main wing spar.		
	NOTE: Working rivets will have a trail of black dust downwind from the fastener. The dust is oxidized aluminum produced by the fastener moving in the hole.		
	(c) Visually inspect for working Hi-Shear rivets at the inboard spar fittings on the main wing spar.		
	(d) Pay particular attention to the trailing edge ribs and the span wise segments supporting the flap actuator or flap bell cranks.		
	(e) For units 2060001 thru 2060215, P2060001 thru P2060160, P206-0161 thru P206-0519, U206-0438 thru U206-1234, P206-0059 thru P206-0597 and U206-1235 thru U206-1367, closely inspect the rear spar with a 4X magnifying device for cracks at the root attach area and the upper flange of the rear spar channel at the outer end of the attach fitting. Where doubt exists, remove the trailing edge root rib for a more detailed inspection.		
	(3) If the flight hours meet or exceed the inspection compliance hours (above), proceed to Detail Inspection below.		
	(4) If crack(s) or corrosion is found at the wing attach fittings proceed to the Detailed Inspection below.		
	(5) If no crack(s) or corrosion is found and the aircraft flight hours are below the inspection compliance hours (above) install access panels, fairings and wing tips. Inspection is complete.		
	C. Detailed Inspection.		
	(1) Support the wing outboard of the strut while removing attach bolts.		
	(2) Remove the wing front spar attach bolts. Visually inspect the holes on the wing and fuselage sides of the fitting and surrounding area for corrosion.		
	(a) Pay particular attention to potential corrosion in the fitting inside the fuselage front carry-thru spar.		
	(b) Conduct a bolt hole eddy current inspection of the front spar attach fittings. Refer to Section 5-13-01 Nondestructive Inspection Methods and Requirements, Eddy Current Inspection– (Bolt Hole Inspection), for additional instructions. The hole size is 0.50 inches in diameter.		

	MECH	INSP
NOTE: With the front spar in position, there are three segments through the hole. There is a fabrication joint in the center segment (wing side), so expect a crack-like indication at about 2:00 and 10:00 o'clock positions. Indications caused by the fabrication joint are not a cause for rejection.		
(c) Install the front spar attach bolt.		
(3) Remove the wing rear spar attach bolts. Mark the location of the indexing slot in the heads of both eccentric bushings. Remove the bushings. Visually inspect the holes and surrounding area for corrosion.		
(a) Pay particular attention to potential corrosion in the fitting inside the fuselage rear carry-thru spar. Refer to the figure below.		
(b) Conduct a bolt hole eddy current inspection of the rear spar attach fittings. Refer to Section 5-13-01 Nondestructive Inspection Methods and Requirements, Eddy Current Inspection – (Bolt Hole Inspection), for additional instructions. The bolt hole size on the fitting-wing attaching is 0.438 inches in diameter while the bolt hole size for both forward and aft fittings on fuselage side is 0.687 inches in diameter.		
(c) Install the bushings in the spar in the same orientation as they were when removed.		
(d) Install the rear spar attach bolt.		
(4) Install the items that were removed to accomplish this inspection, refer to the applicable sections of this manual.		

ACCESS AND DETECTABLE CRACK SIZE

ACCESS/LOCATION	DETECTABLE CRACK SIZE
Wing Attach Points	Not Allowed

INSPECTION METHOD	Visual, Eddy Current, Borescope, Magnifying Glass

		MECH	INSP
REPAIR AND MODIFICATION	Replace cracked or excessively corroded parts (10% or more of the material thickness is missing in the corroded section). If corrosion is present, it must be removed before refinishing. Contact Customer Service for assistance prior to beginning the repair if the disassembly exceeds the repair facilities experience or capability.		

Figure 1. Wing Structure Inspection

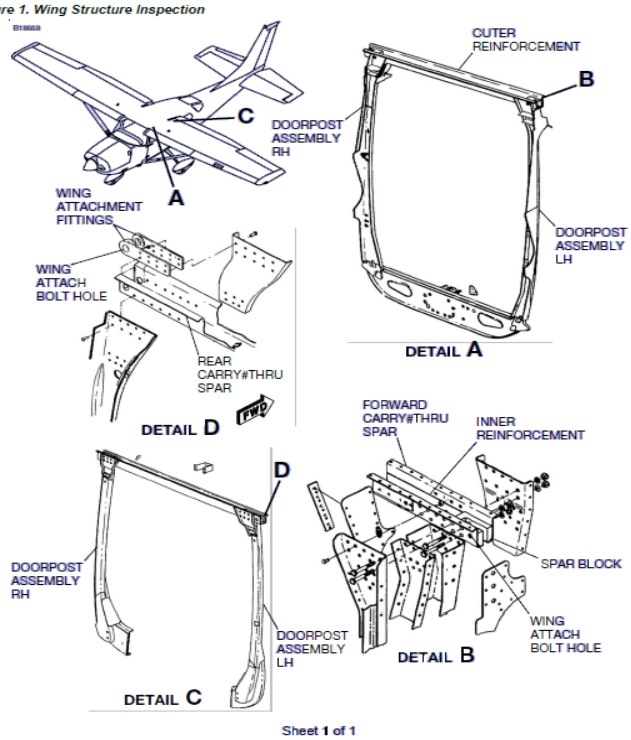

Sheet 1 of 1

DOI - CESSNA 206 SERIES - 1000 HOUR INSPECTION

ACFT TYPE		1000 HOUR INSPECTION REQUIREMENTS	MECH	INSP
206	3	Inspect front spar and attachments. Complete inspection as instructed below.		

TITLE	Wing Front Spar Inspection

EFFECTIVITY	206 S/N		
	206-0001 thru 206-0275	P206-0001 thru P206-0160	U206-0276 thru U206-0437

PURPOSE	To ensure structural integrity of the wing front spar.

		MECH	INSP
INSPECTION INSTRUCTIONS	A. Remove the wing root fairings. Refer to appropriate manual for instructions.		
	B. If the flight hours meet or exceed the inspection compliance hours (above), proceed to Detailed Attach Fitting Inspection.		
	C. Visual Attach Fitting Inspection		
	(1) Visually inspect the front spar attachment area for cracks or corrosion.		
	(a) Clean area before inspecting if grime or debris are present.		
	(b) If cracks or corrosion are found, proceed to Detailed Attach Fitting Inspection.		
	(c) If no cracks or corrosion are found, install fairings. The inspection is complete.		
	D. Detailed Attach Fitting Inspection		
	(1) Support the wing. Refer to appropriate manual for instructions.		
	(2) Remove a front spar attach bolt (remove one at a time, replace the first before removing the second) and conduct a bolt hole eddy current inspection for cracks around the wing attachment hole. Refer to appropriate manual for instructions.		
	(a) Clean area before inspecting if grime or debris are present.		
	NOTE: Use a brass or nonmetallic hammer to start the bolt from the hole if required. Use a slide hammer with a 9/16 or 3/8 inch diameter claw to complete the bolt removal.		
	(3) Visually inspect the area around the bolts for deformation of wing attachment holes. Check for surface cracks or surface corrosion in the vicinity of the bolts.		
	(4) Replace wing and fairings after the inspection. Refer to appropriate manual for instructions.		

ACCESS AND DETECTABLE CRACK SIZE

ACCESS/LOCATION	DETECTABLE CRACK SIZE
Front spar	Not Allowed

INSPECTION METHOD	Visual, Eddy Current

		MECH	INSP
REPAIR AND MODIFICATION	Replace cracked or excessively corroded parts.		

DOI - CESSNA 206 SERIES - 1000 HOUR INSPECTION

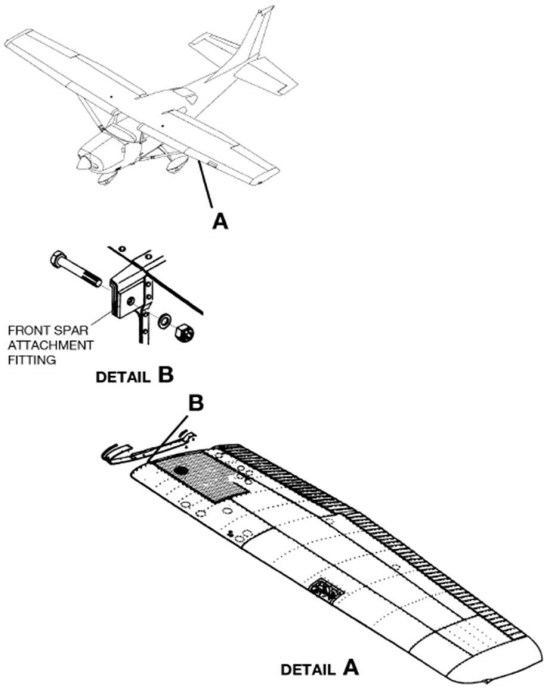

WING FRONT SPAR INSPECTION

ACFT TYPE		1000 HOUR INSPECTION REQUIREMENTS	MECH	INSP
D,E,F,G	4	Elevator Trim Tab Actuator - Clean, lubricate, and check for free-play. Refer to appropriate manual for instructions.		
H	5	Elevator Trim Tab Actuator - Remove, clean, examine, and lubricate the actuator. Refer to appropriate manual for instructions.		
206,A,B,C	6	Elevator trim system. 1. Inspect elevator trim brackets and actuator support brackets. 2. Inspect pulleys, attaching structure, and fasteners. Complete inspection as instructed below.		
TITLE		Elevator Trim Pulley Bracket and Actuator Bracket Structure Inspection		

EFFECTIVITY	**206 S/N**		
	206-0001 thru 206-0275	P206-0001 thru P206-0160	U206-0276 thru U206-0437
		P206-0161 thru P206-0519	U206-0438 thru U206-1234

PURPOSE	To verify the integrity of the elevator trim pulley brackets and the actuator support brackets.

		MECH	INSP
INSPECTION INSTRUCTIONS	A. Remove the trim tab door to get access to the actuator support hardware. Refer to appropriate manual for instructions.		
	B. Inspect elevator trim pulley brackets and actuator support brackets for cracks, corrosion and bent flanges. Straighten bent flanges and check for any cracking.		
	(1) Clean area before inspecting if grime or debris are present.		
	C. Inspect the trim tab actuator bracket for cracks.		
	(1) Clean area before inspecting if grime or debris are present.		
	D. Inspect trim tab for cracks in the area of the push rod attach bracket. Verify if Service Kit SK210-139 (for units P206-0420 thru P206-0519 and U206-0915 thru U206-1234) has been installed. If not, install doubler.		
	E. Inspect all pulleys for wear, flat spots, and freedom of rotation. Refer to the figure below.		
	F. Inspect all fasteners and attaching structure for integrity.		

DOI - CESSNA 206 SERIES - 1000 HOUR INSPECTION

ACCESS AND DETECTABLE CRACK SIZE	
ACCESS/LOCATION	**DETECTABLE CRACK SIZE**
Stabilizer	Not Allowed

INSPECTION METHOD	Visual

		MECH	INSP
REPAIR AND MODIFICATION	A. Replace any cracked or excessively corroded (10% or more of the material thickness is missing in the corroded section) brackets. Replace excessively worn, flat spotted or stiff pulleys. Replace any loose or sheared fasteners. Make repairs IAW the appropriate manual. Coordinate any repair not available in the manual with Cessna Customer Service prior to beginning the repair.		

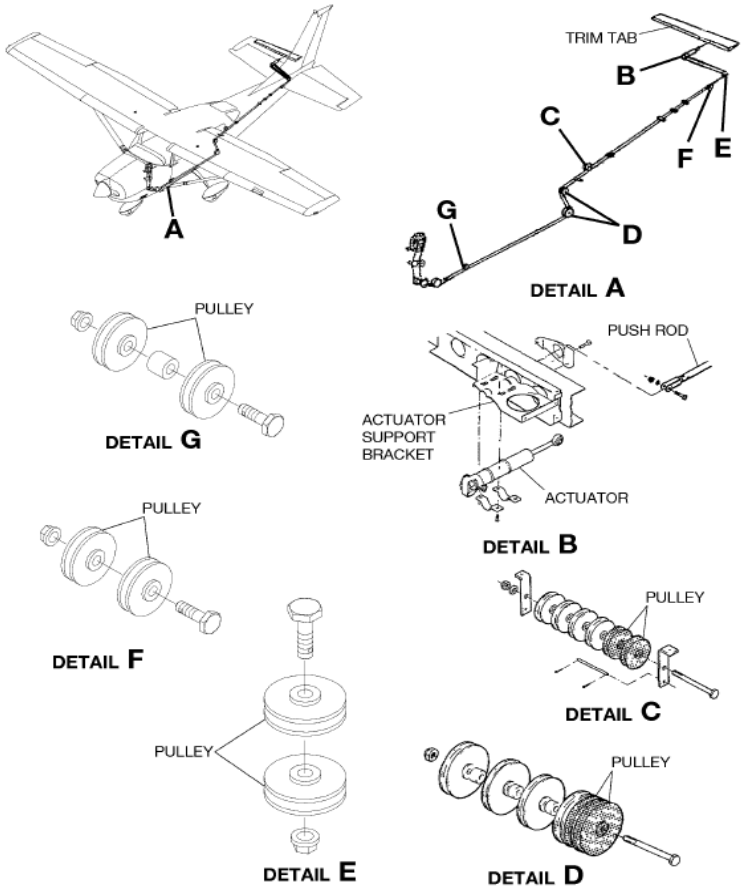

ELEVATOR TRIM PULLEY BRACKET AND ACTUATOR BRACKET STRUCTURE INSPECTION

ACFT TYPE		**1000 HOUR INSPECTION REQUIREMENTS**	MECH	INSP
A,B,C,D,E,F,G	7	Elevator trim system. 1. Inspect elevator trim brackets and actuator support brackets. 2. Inspect pulleys, attaching structure and fasteners. Complete inspection as instructed below.		
TITLE		Elevator Trim Pulley Bracket and Actuator Bracket Structure Inspection		

EFFECTIVITY	**206 S/N**	
	P206-0520 thru P20600647	U206-1235 thru U20603521
		U206-3522 thru U20607020

PURPOSE	To verify the integrity of the elevator trim pulley brackets and the actuator support brackets.

		MECH	INSP
INSPECTION INSTRUCTIONS	A. Remove the trim tab door to get access to the actuator support hardware. Refer to appropriate manual for instructions.		

	MECH	INSP
B. Remove seats, floor covering and floor inspection panels as necessary to inspect elevator trim pulley brackets and actuator support brackets for cracks, corrosion and bent flanges. Refer to the applicable Model 206 Service Manual. Straighten bent flanges and check for any cracking, using at least a 4X power magnifying glass and a bright light. Refer to the figure below.		
(1) Clean area before inspecting if grime or debris is present.		
C. Inspect trim tab for cracks in the area of the push rod attach bracket. Verify if Service Kit SK210-139 has been installed. If not, install doublers.		
D. Inspect all pulleys for wear, flat spots and freedom of rotation. Refer to the figure below.		
E. Inspect all fasteners and attaching structure for integrity.		

ACCESS AND DETECTABLE CRACK SIZE

ACCESS/LOCATION	DETECTABLE CRACK SIZE
Stabilizer	Not Allowed

INSPECTION METHOD	Visual

		MECH	INSP
REPAIR AND MODIFICATION	Replace any cracked or excessively corroded (10% or more of the material thickness is missing in the corroded section) brackets. Replace excessively worn, flat spotted or stiff pulleys. Straighten bent pulley brackets and actuator brackets with finger pressure and inspect for cracking. Replace any loose or sheared fasteners. Make repairs in accordance with Section 18 (Structural Repair) of the applicable Model 206 Service Manual. Coordinate any repair not available in Section 18 with Cessna Customer Service prior to beginning the repair.		

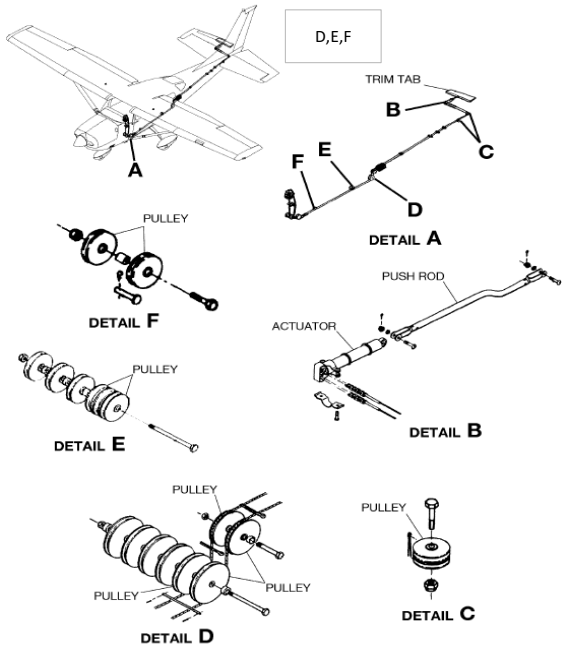

ELEVATOR TRIM PULLEY BRACKET AND ACTUATOR BRACKET STRUCTURE INSPECTION

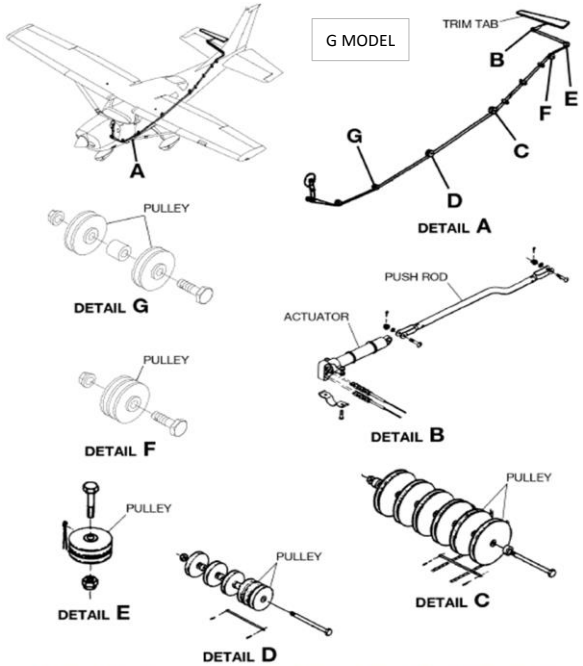

ELEVATOR TRIM PULLEY BRACKET AND ACTUATOR BRACKET STRUCTURE INSPECTION

ACFT TYPE		1000 HOUR INSPECTION REQUIREMENTS	MECH	INSP
H	8	Elevator trim system. 1. Inspect elevator trim brackets and actuator support brackets. 2. Inspect pulleys, attaching structure and fasteners. Complete inspection as instructed below.		
TITLE		Elevator Trim Pulley Bracket and Actuator Bracket Structure Inspection		

EFFECTIVITY	206 S/N	
	20608001 and On	T20608001 and On

DOI - CESSNA 206 SERIES - 1000 HOUR INSPECTION

PURPOSE	To verify the integrity of the elevator trim pulley brackets and the actuator support brackets.		
		MECH	INSP
INSPECTION INSTRUCTIONS	A. Remove the inspection panel adjacent to the trim tab actuator to get access to the actuator support hardware, refer to the applicable sections of this manual.		
	B. Remove seats, floor covering and floor inspection panels as necessary to inspect elevator trim pulley brackets and actuator support brackets for cracks, corrosion and bent flanges. Straighten bent flanges and check for any cracking, using at least a 4x power magnifying glass and a bright light. Refer to the figure below.		
	(1) Clean area before inspecting if grime or debris is present.		
	C. Inspect all pulleys for wear, flat spots and freedom of rotation.		
	D. Inspect all fasteners and attaching structure for integrity.		
	E. Review the airplane maintenance records to verify that service bulletins SB00–55–02 and SB10–27–01 have been complied with for the applicable airplane serial numbers. For affected airplane serial numbers that are not in compliance with SB00–55–02 and SB10–27–01, comply with these service bulletins concurrent with this inspection.		
	F. Install all items removed for this inspection, refer to the applicable sections of this manual.		

ACCESS AND DETECTABLE CRACK SIZE

ACCESS/LOCATION	DETECTABLE CRACK SIZE
Stabilizer	Not Allowed

INSPECTION METHOD	Visual

		MECH	INSP
REPAIR AND MODIFICATION	Replace any cracked or excessively corroded (10% or more of the material thickness is missing in the corroded section) brackets. Replace excessively worn, flat spotted or stiff pulleys. Straighten bent pulley brackets and actuator brackets with finger pressure and inspect for cracking. Replace any loose or sheared fasteners. Make repairs IAW the appropriate manual. Coordinate any repair not available in the manual with Cessna Customer Service prior to beginning the repair.		

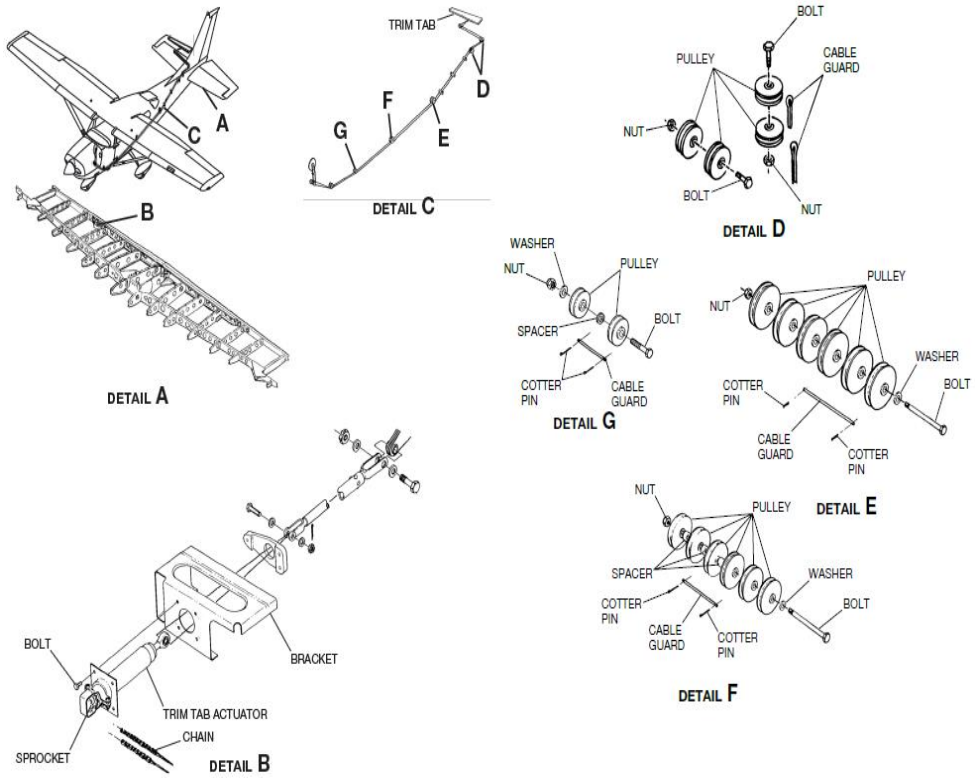

DOI - CESSNA 206 SERIES - 1000 HOUR INSPECTION

ACFT TYPE		1000 HOUR INSPECTION REQUIREMENTS	MECH	INSP
ALL	9	Inspect the aileron hinges, hinge bolts, hinge bearings, and hinge and pushrod attach fittings. Complete inspection as instructed below.		
TITLE		Aileron Support Structure Inspection		

EFFECTIVITY	**206 S/N**		
	206-0001 thru 206-0275	P206-0001 thru P206-0160	U206-0276 thru U206-0437
	20608001 and On	P206-0161 thru P206-0519	U206-0438 thru U206-1234
	T20608001 and On	P206-0520 thru P20600647	U206-1235 thru U20603521
			U206-3522 thru U20607020

PURPOSE	To ensure structural integrity of the Aileron Support Structure.

		MECH	INSP
INSPECTION INSTRUCTIONS	A. Remove the ailerons, refer to the applicable sections of this manual.		
	B. Visually inspect the aileron hinges for condition, cracks and security; hinge bolts, hinge bearings for condition and security; bearings for freedom of rotation; hinge and pushrod attach fittings for evidence of damage, wear, failed fasteners and security, refer to the figure below.		
	(1) Clean area before inspecting if grime or debris is present.		
	(2) Pay particular attention to the lower single rivet tabs that attach the hinge brackets to the wings.		
	(3) Inspect for defects in the rear spar that are evidenced by looseness and movement of the hinge brackets in the up-and-down direction.		
	(a) If the hinge brackets are found to have excessive movement remove the false spar for a more detailed inspection.		
	C. If any hinge bearings are found frozen or extremely stiff, inspect aileron hinge fittings for cracks using surface eddy current. Refer to appropriate manual for instructions.		
	NOTE: The inspection is for the aluminum structure outside of the bearing, make sure the instrument is set for aluminum material prior to starting the Eddy Current inspection.		
	D. Install the items that were removed to accomplish this inspection. Refer to appropriate manual for instructions.		

ACCESS AND DETECTABLE CRACK SIZE

ACCESS/LOCATION	DETECTABLE CRACK SIZE
Wings	Not Allowed

INSPECTION METHOD	Visual with Surface Eddy Current if required.

		MECH	INSP
REPAIR AND MODIFICATION	Replace any damaged or cracked fittings. Replace damaged hinge bolts. Replace loose, corroded or excessively tight bearings. Replace damaged (cracked) hinge brackets. Make repairs IAW the appropriate manual. Coordinate any repair not available in the manual with Cessna Customer Service prior to beginning the repair.		

Figure 1. Aileron Support Structure Inspection

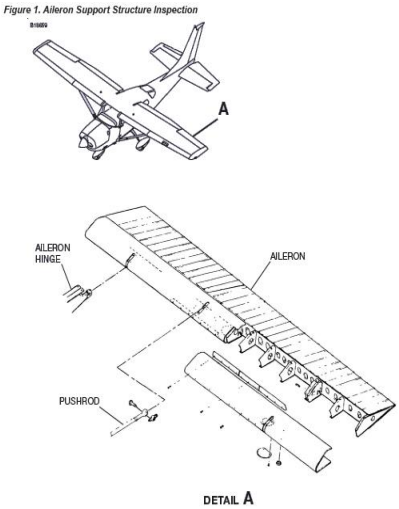

DOI - CESSNA 206 SERIES - 1000 HOUR INSPECTION

ACFT TYPE		1000 HOUR INSPECTION REQUIREMENTS	MECH	INSP
206,A,B,C,D,E,F,G	10	Inspect main landing gear fittings and attachment of the fittings to the bulkheads. Complete inspection as instructed below.		
TITLE		Main Landing Gear Fittings Inspection		

EFFECTIVITY	**206 S/N**		
	206-0001 thru 206-0275	P206-0001 thru P206-0160	U206-0276 thru U206-0437
		P206-0161 thru P206-0519	U206-0438 thru U206-1234
		P206-0520 thru P20600647	U206-1235 thru U20603521
			U206-3522 thru U20607020

PURPOSE	To ensure structural integrity of the main landing gear fittings.

		MECH	INSP
INSPECTION INSTRUCTIONS	A. Inspect the outboard main landing gear fittings for cracking using a light and mirror. Refer to the figure below. Pay particular attention to the area directly above the forward and aft edges of the landing gear spring and the attachment of the fittings to the bulkheads.		
	(1) Clean area before inspecting if grime or debris is present.		
	B. Inspect the inboard main landing gear fittings for cracking using a light and mirror. Pay particular attention to the area directly below the landing gear spring attachment and the attachment of the fittings to the bulkheads.		
	(1) Clean area before inspecting if grime or debris is present.		

ACCESS AND DETECTABLE CRACK SIZE

ACCESS/LOCATION	DETECTABLE CRACK SIZE
Main Gear Support	Not Allowed

INSPECTION METHOD	Visual

		MECH	INSP
REPAIR AND MODIFICATION	A. Main landing gear fittings are contained between two wrap-around bulkheads which physically contain the bulkheads even after the attach fasteners are removed. A recommended method to replace main landing gear fittings is to support the airplane to maintain alignment during rework, remove the floorboard just forward of the forward main gear bulkhead, remove the four longerons forward of the forward main landing gear bulkhead, and then slide the forward main landing gear bulkhead forward to disengage it from the fittings. Since the attach holes will be reused to reinstall the parts, remove rivets carefully, to avoid excessively enlarging rivet holes. After the fittings are installed, reinstall the removed parts in reverse order. Make repairs IAW the applicable manual. Coordinate any repair not available in the manual with Cessna Customer Service prior to beginning the repair.		

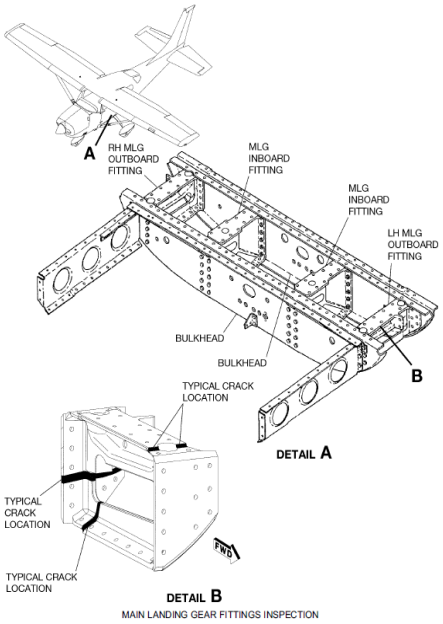

MAIN LANDING GEAR FITTINGS INSPECTION

DOI - CESSNA 206 SERIES - 1000 HOUR INSPECTION

ACFT TYPE		1000 HOUR INSPECTION REQUIREMENTS	MECH	INSP
H	11	Inspect main landing gear fittings and attachment of the fittings to the bulkheads. Complete inspection as instructed below.		
TITLE		Main Landing Gear Fittings Inspection		

EFFECTIVITY	**206 S/N**	
	20608001 and On	T20608001 and On

PURPOSE	To ensure structural integrity of the main landing gear fittings.

		MECH	INSP
INSPECTION INSTRUCTIONS	A. Remove interior seats, floor coverings, and access panels to get access to the main landing gear attach fittings. Refer to appropriate manual for instructions and the figure below.		
	B. Do a visual inspection of the outboard main landing gear fittings for cracking using a light and mirror. Pay particular attention to the area directly above the forward and aft edges of the landing gear spring and the attachment of the fittings to the bulkheads.		
	(1) Clean area before inspecting if grime or debris is present.		
	C. Inspect the inboard main landing gear fittings for cracking using a light and mirror. Pay particular attention to the area directly below the landing gear spring attachment and the attachment of the fittings to the bulkheads.		
	(1) Clean area before inspecting if grime or debris is present.		
	D. Review the airplane maintenance records and verify that service bulletins SB06-53-02 and SB03-53-02 have been complied with for the affected airplane serial numbers. For affected airplanes that are found not in compliance with SB06-53-02 and SB03-53-02, accomplish the applicable service bulletin concurrent with this inspection.		
	E. Install the items that were removed to accomplish this inspection. Refer to appropriate manual for instructions.		

ACCESS AND DETECTABLE CRACK SIZE

ACCESS/LOCATION	DETECTABLE CRACK SIZE
Main Gear Support	Not Allowed

INSPECTION METHOD	Visual

		MECH	INSP
REPAIR AND MODIFICATION	A. Main landing gear fittings are contained between two wrap-around bulkheads which physically contain the bulkheads even after the attach fasteners are removed. A recommended method to replace main landing gear fittings is to support the airplane to maintain alignment during rework, remove the floorboard just forward of the forward main gear bulkhead, remove the four longerons forward of the forward main landing gear bulkhead, and then slide the forward main landing gear bulkhead forward to disengage it from the fittings. Since the attach holes will be reused to reinstall the parts, remove rivets carefully, to avoid excessively enlarging the rivet holes. After the fittings are installed, reinstall the removed parts in reverse order. Make repairs IAW appropriate manual. Coordinate any repair not available in the manual with Cessna Customer Service prior to beginning the repair.		

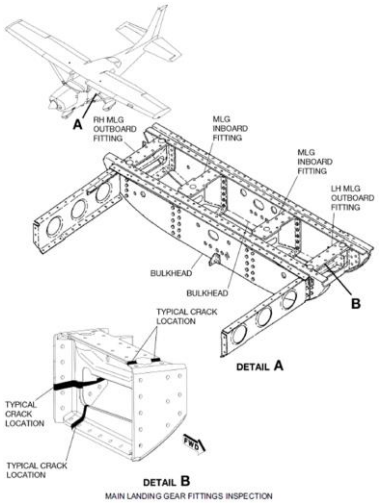

MAIN LANDING GEAR FITTINGS INSPECTION

DOI - CESSNA 206 SERIES - 1000 HOUR INSPECTION

ACFT TYPE		1000 HOUR INSPECTION REQUIREMENTS	MECH	INSP
206,A,B,C	12	Inspect nose landing gear torque links, bolts, bushings, and nose landing gear fork. Complete inspection as instructed below.		
TITLE		Nose Gear Torque Link, Bolt and Fork Inspection		

EFFECTIVITY	**206 S/N**		
	206-0001 thru 206-0275	P206-0001 thru P206-0160	U206-0276 thru U206-0437
		P206-0161 thru P206-0519	U206-0438 thru U206-1234

PURPOSE	To ensure structural integrity of the nose gear torque links, bolts and nose gear fork.

		MECH	INSP
INSPECTION INSTRUCTIONS	A. Deflate the nose gear strut. Refer to appropriate manual for instructions.		
	B. Remove torque link bolts one at a time. Refer to appropriate manual for instructions.		
	(1) Clean areas before inspecting if grime or debris are present.		
	C. Inspect for bent bolts or worn bolts. Refer to the figure below.		
	D. Inspect torque links for cracks.		
	E. Inspect torque link bushings for excessive wear or deformation.		
	(1) Check clearance between the NAS bushings in the upper and lower torque link joints and the spacers. The ID for the bushing is 0.3750-0.3765 inches and the OD for the spacer is 0.3744-0.3750 inches. By design, the maximum clearance is 0.0021 inches. Use 0.005 inches as a wear limit.		
	(2) Check clearance between NAS bushing and bolt at joint joining upper and lower torque links. The ID for the bushing is 0.1900-0.1915 inches and the OD for the bolt is 0.1885-0.1894 inches. By design, the maximum clearance is 0.003 inches. Use 0.006 inches as wear limit		
	F. Install serviceable bolts after inspection.		
	G. Inspect the fork for cracking along the forging parting line.		
	(1) Clean areas before inspecting if grime or debris are present.		
	H. Support the forward fuselage.		
	I. Remove the bolts from the nose gear actuator retraction cylinder, one at a time, and check the bolts for straightness and deformation.		
	J. Reinstall the bolts and charge the oleo. Refer to appropriate manual for instructions.		

ACCESS AND DETECTABLE CRACK SIZE

ACCESS/LOCATION	DETECTABLE CRACK SIZE
Nose Gear Section	Not Allowed

INSPECTION METHOD	Visual

		MECH	INSP
REPAIR AND MODIFICATION	Replace bent bolts or worn bolts or bushings with new parts if wear limits are exceeded. A cracked fork or torque link is not repairable, and must be replaced. Make other repairs IAW the appropriate manual. Coordinate any repair not available in the manual with Cessna Customer Service prior to beginning the repair.		

DOI - CESSNA 206 SERIES - 1000 HOUR INSPECTION

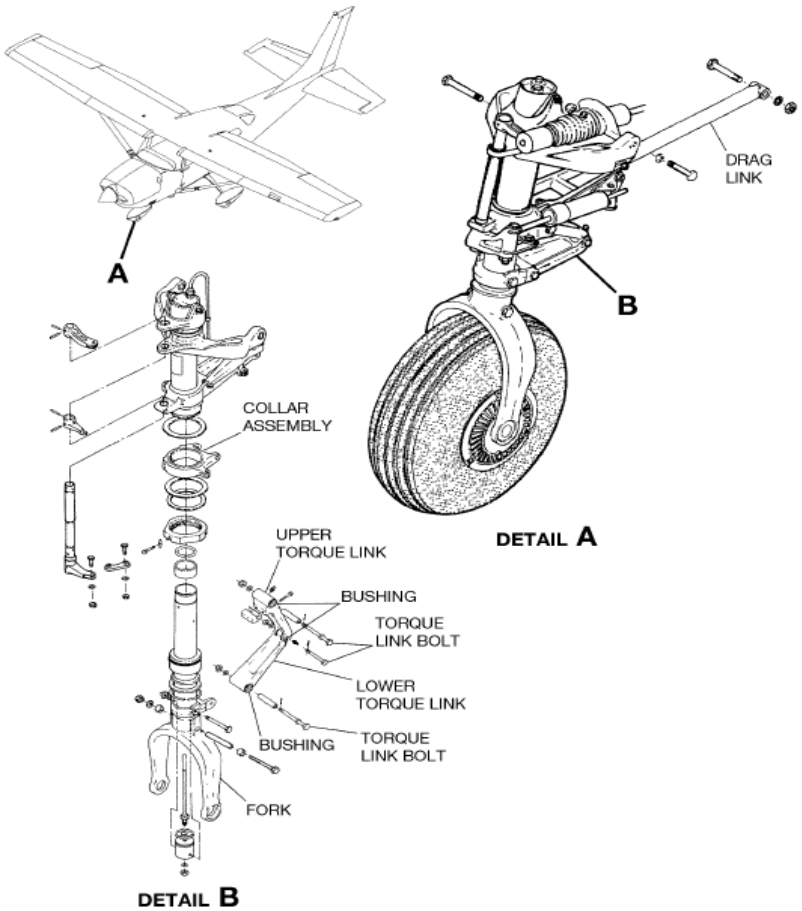

NOSE GEAR TORQUE LINK, BOLT AND FORK INSPECTION

ACFT TYPE		1000 HOUR INSPECTION REQUIREMENTS	MECH	INSP
D,E,F,G,H	12	Inspect the nose landing gear torque links, drag link, bushings, nose landing gear fork and collar. Complete inspection as instructed below.		
TITLE		Nose Landing Gear Inspection		

	206 S/N		
EFFECTIVITY	20608001 and On	P206-0520 thru P20600647	U206-1235 thru U20603521
	T20608001 and On		U206-3522 thru U20607020

PURPOSE	To ensure structural integrity of the nose gear torque link, drag link bolts, nose gear fork and collar.

		MECH	INSP
INSPECTION INSTRUCTIONS	A. Deflate the nose gear strut. Refer to appropriate manual for instructions.		
	B. Do a visual inspection of the torque links for cracks, refer to the figure below.		
	(1) Clean area before inspecting if grime or debris is present.		
	C. Remove torque link bolts one at a time. Refer to appropriate manual for instructions.		
	D. Inspect for bent bolts or worn bolts. Install serviceable bolts after inspection.		
	(1) Clean area before inspecting if grime or debris is present.		

	MECH	INSP
E. Inspect center torque link bushings for excessive wear or deformation. Maximum new clearance between the NAS bushings in the mid joint upper torque link lug (ID = 0.1900 to 0.1915 in.) and the bolt (OD = 0.1885 to 0.1894 in.) is 0.0030 in. A clearance of 0.006 in. is the maximum wear limit.		
(1) Clean area before inspecting if grime or debris is present.		
F. Inspect upper and lower joint torque link bushings for excessive wear or deformation. As the bolt clamps up on the spacer, the wear is to be measured between the NAS bushing and the spacer. Maximum new clearance between the NAS bushings in the torque link (ID = 0.3750 to 0.3765 in.) and the spacer (OD = 0.3744 to 0.3750 in.) is 0.0021 in. A clearance of 0.006 in. is the maximum wear limit.		
(1) Clean area before inspecting if grime or debris is present.		
G. Inspect the fork for cracking along the forging parting line.		
(1) Clean area before inspecting if grime or debris is present.		
H. Remove drag link bolts one at a time. Refer to appropriate manual for instructions.		
I. Inspect for bent bolts or worn bolts. Install serviceable bolts after inspection.		
(1) Clean area before inspecting if grime or debris is present.		
J. Inspect the attachment of drag link and the bolt for excessive wear or deformation. Maximum new clearance between the drag link and the bolt is 0.010 in.		
K. Inspect collar assembly for cracks.		
L. Service the nose landing gear strut. Refer to appropriate manual for instructions.		

ACCESS AND DETECTABLE CRACK SIZE

ACCESS/LOCATION	DETECTABLE CRACK SIZE
Nose Gear Section	Not Allowed

INSPECTION METHOD	Visual

		MECH	INSP
REPAIR AND MODIFICATION	Replace bent bolts or worn bolts or bushings with new parts if wear limits are exceeded. A cracked torque link, fork, or collar are not repairable and must be replaced. Make repairs IAW appropriate manual. Coordinate any repair not available in the manual with Cessna Customer Service prior to beginning the repair.		

Figure 1. Nose Landing Gear Inspection

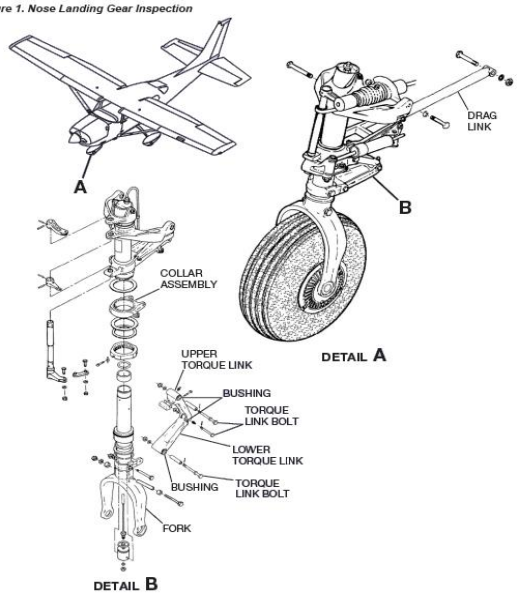

DOI - CESSNA 206 SERIES - 1000 HOUR INSPECTION

ACFT TYPE		1000 HOUR INSPECTION REQUIREMENTS	MECH	INSP
206,A,B,C,D,E,F,G	13	Inspect the wing strut fitting and attachment of fitting to the bulkhead. Complete inspection as instructed below.		
TITLE		Strut Attach Fitting Inspection		

EFFECTIVITY	**206 S/N**		
	206-0001 thru 206-0275	P206-0001 thru P206-0160	U206-0276 thru U206-0437
		P206-0161 thru U206-0519	U206-0438 thru P206-1234
		P206-0520 thru P20600647	U206-1235 thru U20603521
			U206-3522 thru U20607020

PURPOSE	To verify the integrity of the strut fitting and adjacent bulkhead.

		MECH	INSP
INSPECTION INSTRUCTIONS	A. Remove a portion of the interior of the airplane to gain access to the lower end of the front door post bulkhead.		
	B. Visually inspect the fitting for evidence of corrosion. Refer to the figure below.		
	(1) Clean area before inspecting if grime or debris is present.		
	C. Visually inspect the attachment of the fitting to the bulkhead. Pay particular attention to the bulkhead where the flange ends in a bend relief. Also look for the cracks following the contour of the wing strut support fitting. Refer to the figure below.		
	(1) Clean area before inspecting if grime or debris is present.		
	D. If evidence of corrosion is found, cracks are suspected or compliance flight hour limit exceeded, then conduct a surface eddy current inspection around each of the nine Hi-Shear steel fasteners through the fuselage wing strut attach fitting. Refer to appropriate manual for instructions.		
	NOTE: If removal of any of the Hi-Shear fasteners is necessary, they may be replaced with Hi-Lok fasteners.		

ACCESS AND DETECTABLE CRACK SIZE

ACCESS/LOCATION	DETECTABLE CRACK SIZE
Cabin	Not Applicable

INSPECTION METHOD	Visual and Eddy Current

		MECH	INSP
REPAIR AND MODIFICATION	A. If corrosion is found, remove corrosion by lightly sanding corroded area, taking care to remove as little material as necessary to completely remove corrosion and remaining pits in fitting or bulkhead.		
	B. Buff out sanding marks.		
	C. Assess remaining bulkhead thickness. If more than 10%of bulkhead material has been removed from the local area, the area must be repaired or replaced.		
	D. Clean and prime sanded areas.		
	E. Damaged bulkheads may be repaired in accordance with Service Bulletin SEB93-5. Coordinate any repair not available in Service Bulletin SEB93-5 with Cessna Customer Service prior to beginning repair.		
	F. Replace strut attach forgings with crack indications.		

DOI - CESSNA 206 SERIES - 1000 HOUR INSPECTION

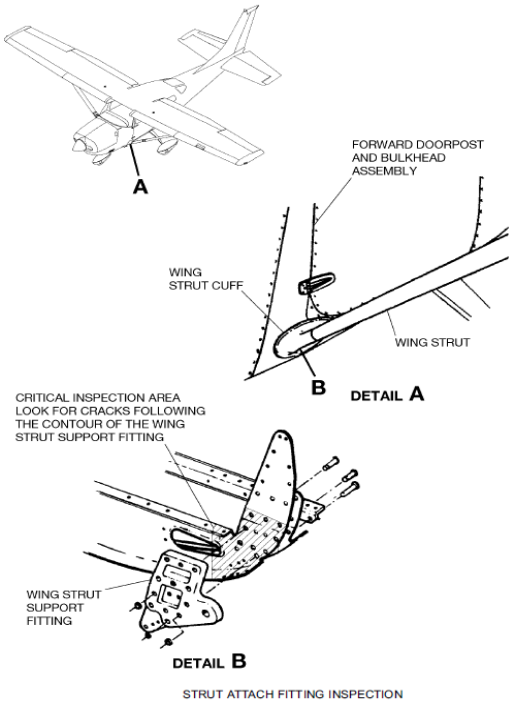

STRUT ATTACH FITTING INSPECTION

ACFT TYPE		1000 HOUR INSPECTION REQUIREMENTS	MECH	INSP
ALL	14	Inspect strut and wing strut attachments. Complete inspection as instructed below.		
TITLE		Strut and Wing Strut Attachment Inspection		

	206 S/N		
EFFECTIVITY	206-0001 thru 206-0275	P206-0001 thru P206-0160	U206-0276 thru U206-0437
	20608001 and On	P206-0161 thru P206-0519	U206-0438 thru U206-1234
	T20608001 and On	P206-0520 thru P20600647	U206-1235 thru U20603521
			U206-3522 thru U20607020

		MECH	INSP
PURPOSE	To verify the integrity of the strut and strut attachment fitting to the wing.		
INSPECTION INSTRUCTIONS	A. Remove the wing strut upper and lower fairings. Refer to the applicable Model 200 Series Service Manual.		
	B. If the flight hours meet or exceed the inspection compliance hours (above), proceed to Detailed Attach Fitting inspection.		
	(1) Visually inspect the strut attachment fittings for cracks or corrosion. Refer to the figure below.		
	(a) Clean area before inspecting if grime or debris is present.		
	(b) If crack(s) or corrosion is found, proceed to Detailed Attach Fitting Inspection.		
	(2) Visually inspect the strut tube for cracks or corrosion.		
	(a) Clean area before inspecting if grime or debris is present.		
	(b) If crack(s) or corrosion is found, proceed to Detailed Attach Fitting Inspection.		
	(3) If no crack(s) or corrosion is found, install fairings. The inspection is complete.		
	C. Detailed Attach Fitting Inspection		
	(1) Support the wing to minimize the load on the strut to wing attach bolt.		

	MECH	INSP
(2) Remove the upper attach bolt and lower the strut to a support.		
(3) Remove the lower attach bolt and remove the strut.		
(4) Visually examine the strut tube for cracks or corrosion.		
(5) Visually inspect the strut attachment fittings for corrosion.		
(6) Inspect using Eddy current for cracks radiating from the wing and fuselage attach holes in the wing strut end fitting. Refer to the figure below.		
(7) Replace the strut by installing the lower attachment, then the upper attachment. Refer to appropriate manual for instructions.		

ACCESS AND DETECTABLE CRACK SIZE

ACCESS/LOCATION	DETECTABLE CRACK SIZE
Wing Strut	Not Applicable

INSPECTION METHOD	Visual and Eddy Current

		MECH	INSP
REPAIR AND MODIFICATION	A. If corrosion is found, remove corrosion by lightly sanding corroded area, taking care to remove as little material as necessary to completely remove corrosion. If the material thickness is less than 90% of the uncorroded section, then replace the affected part.		
	B. Buff out sanding marks.		
	C. Corrosion or damage to attachment holes will require specialized rework. Contact Cessna Field Service for rework of corroded or damaged attachment holes.		
	D. Clean and prime sanded areas.		

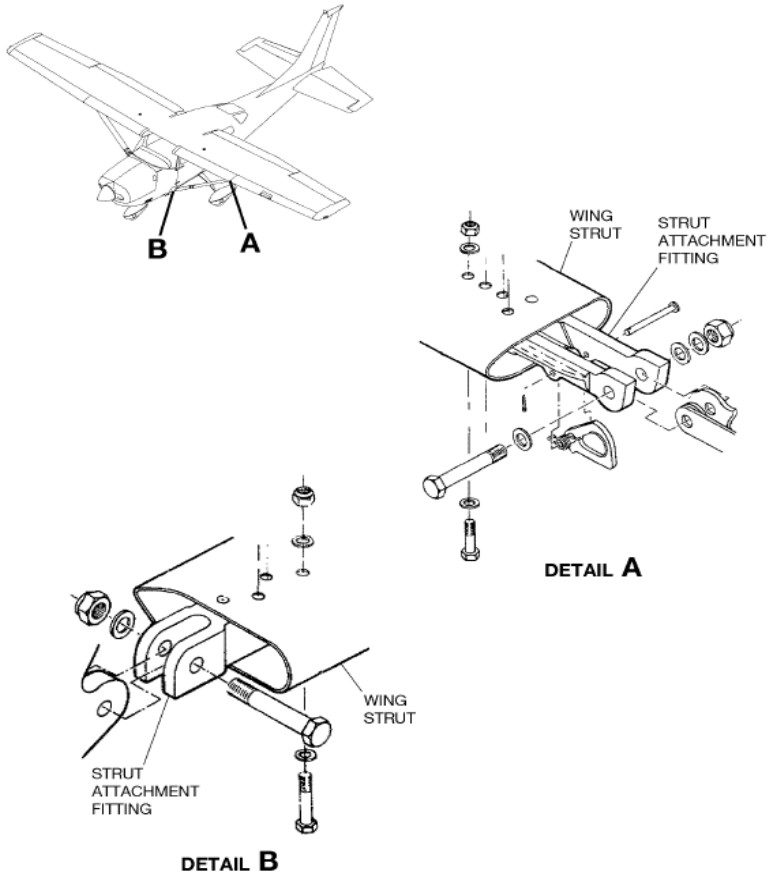

STRUT AND WING STRUT ATTACHMENT INSPECTION

DOI - CESSNA 206 SERIES - 1000 HOUR INSPECTION

ACFT TYPE		1000 HOUR INSPECTION REQUIREMENTS	MECH	INSP
206,A,B,C,D,E,F,G	16	Inspect fuselage upper and lower forward doorposts. Complete inspection as instructed below.		
TITLE		Fuselage Forward Doorpost Inspection		

	206 S/N	
EFFECTIVITY	U206-0276 thru U206-0437	U206-1235 thru U20603521
	U206-0438 thru U206-1234	U206-3522 thru U20607020

PURPOSE	To verify integrity of the fuselage lower forward doorpost and left upper forward doorpost.		
		MECH	INSP
INSPECTION INSTRUCTIONS	A. Review the aircraft records to determine if Service Kit SK206-41 has been installed. If it has been installed, proceed to D below.		
	NOTE: If there is any doubt about the installation of SK206-41, inspect the area parallel to lower LH side of the windshield. If there is a stiffener installed on the inside windshield retainer, then the service kit has been installed. Refer to the figure below, Detail A and View B-B. If the stiffener has not been installed, proceed to the inspection below.		
	B. Remove the left cabin door by pulling the hinge pins. Remove upholstery panels and shields as required to gain access to left upper doorpost.		
	C. Using a flashlight and inspection mirror, visually inspect doorpost for cracks across a line parallel to the lower edge of the windshield. Refer to the figure below, Detail B.		
	(1) Clean area before inspecting if grime or debris is present.		
	D. Review the aircraft records to determine if Service Kit SK206-42 has been installed. If it has, inspection is complete.		
	NOTE: If there is any doubt about the installation of SK206-42, inspect the forward and aft side of the front doorpost bulkhead assembly where the wing strut fitting installs. If there is a channel installed on the forward side of the wing strut fitting that extends approximately 7 inches inboard under the upper flange of the front doorpost bulkhead and if on the aft side of the front doorpost bulkhead a web reinforcement has been installed opposite to the wing strut fitting then the service kit has been installed. Refer to the figure below. If the service kit has not been installed, proceed to the inspection below.		
	E. Pull back the upholstery covering the front and right floorboards at the intersection of the forward doorpost and floor.		
	F. Remove and retain the upholstery and heater ducts on both sides at the bottom of the forward left and right doorposts. The critical inspection area must be fully exposed.		
	G. Remove floorboard inspection covers in areas fore and aft of doorpost.		
	H. Refer to the figure below, Detail D. Using a flashlight and inspection mirror, visually inspect areas shown for cracks. If there are cracks present, they should be visible at the intersection of the doorpost and the forward doorpost bulkhead. Look for cracks that follow the contour of the wing strut support fitting.		
	(1) Clean area before inspecting if grime or debris is present.		

ACCESS AND DETECTABLE CRACK SIZE

ACCESS/LOCATION	DETECTABLE CRACK SIZE
Fuselage, Front doorpost	Not Allowed

INSPECTION METHOD	Visual

		MECH	INSP
REPAIR AND MODIFICATION	A. If the lower forward doorpost bulkhead is cracked, it may be repaired according to Service Bulletin SEB93-5 or as listed below.		
	(1) Obtain Cessna Service Kit SK206-42.		
	(2) Install the Service Kit in accordance with the included instructions.		
	B. If cracks are present on the left upper doorpost, it may be repaired according to Service Bulletin SEB93-4 or as listed below.		

DOI - CESSNA 206 SERIES - 1000 HOUR INSPECTION

	MECH	INSP
(1) Obtain Cessna Service Kit SK206-41.		
(2) Install the Service Kit in accordance with the included instructions.		

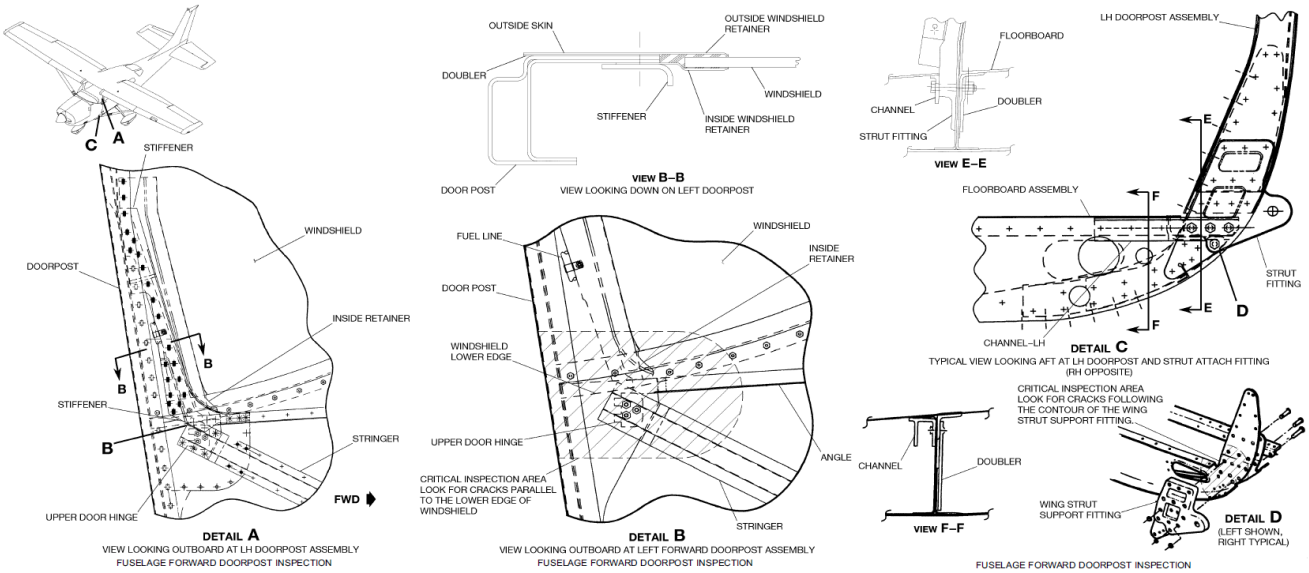

ACFT TYPE		1000 HOUR INSPECTION REQUIREMENTS	MECH	INSP
H	15	Inspect the forward doorpost, wing strut attach point and surrounding structure. Complete inspection as instructed below.		
TITLE		Fuselage Forward Doorpost Inspection		

EFFECTIVITY	**206 S/N**	
	20608001 and On	T20608001 and On

PURPOSE	To verify integrity of the fuselage lower forward doorpost.

		MECH	INSP
INSPECTION INSTRUCTIONS	A. Remove a portion of the interior of the airplane to gain access to the lower end of the forward left and right doorpost bulkheads. Refer to the applicable manual and the figure below.		
	B. Remove floorboard inspection covers in areas fore and aft of doorposts. The critical inspection area must be fully exposed.		
	C. Using a flashlight and inspection mirror, visually inspect the area at the intersection of the doorpost and the forward doorpost bulkhead. Look for cracks that follow the bottom contour. Refer to the figure below.		
	(1) Clean the area before inspecting if grime or debris is present.		
	D. Visually inspect the door post area for cracks where the cabin door lower hinges attach to the door posts.		
	(1) Clean the area before inspecting if grime or debris is present.		
	E. Visually inspect the strut fitting area for evidence of corrosion.		
	(1) Clean the area before inspecting if grime or debris is present.		
	F. If the airplane is equipped with a fuel step, visually inspect the fuselage skin under the fuel step for cracks.		
	G. If evidence of corrosion is found, cracks are suspected, or the compliance time limit is exceeded, conduct a surface eddy current inspection of the bulkhead around the strut attach fitting. Refer to appropriate manual for instructions.		
	H. Install the items that were removed to accomplish this inspection, refer to the applicable manual.		

DOI - CESSNA 206 SERIES - 1000 HOUR INSPECTION

ACCESS AND DETECTABLE CRACK SIZE	
ACCESS/LOCATION	**DETECTABLE CRACK SIZE**
Cabin	Not Allowed

INSPECTION METHOD	Visual with Eddy Current if needed

		MECH	INSP
REPAIR AND MODIFICATION	A. If corrosion is found, remove corrosion by lightly sanding corroded area, taking care to remove as little material as necessary to completely remove corrosion and remaining pits in fitting or bulkhead.		
	B. Buff out sanding marks.		
	C. Assess remaining bulkhead thickness. If more than 10% of bulkhead material has been removed from the local area, the area must be repaired or replaced.		
	D. Clean and prime sanded areas.		
	E. Damaged bulkheads may be repaired. Coordinate any repair needed with Cessna Customer Service prior to beginning repair.		
	F. Replace strut attach fittings with crack indications.		

Figure 1. Fuselage Forward Doorpost Inspection

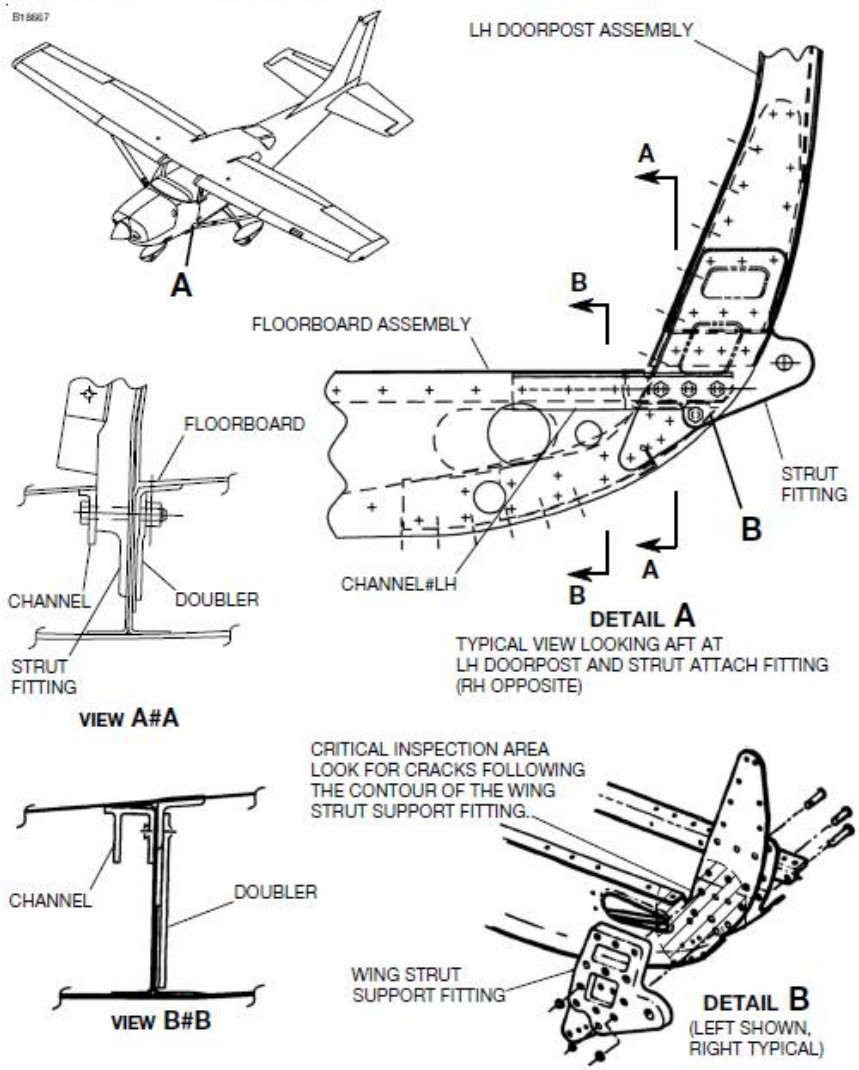

DOI - CESSNA 206 SERIES - 1000 HOUR STRUCTURAL INSPECTION

ZONE	ACFT TYPE		1000 HOUR STRUCTURAL INSPECTION REQUIREMENTS	MECH	INSP
ARCTIC		16			
ARCTIC		17			
ARCTIC		18			
ARCTIC		19			
ARCTIC		20			
ARCTIC		21			
ARCTIC		22			
ARCTIC		23			
ARCTIC		24			
ARCTIC		25			
ARCTIC		26			
ARCTIC		27			
ARCTIC		28			
TEMPERATE		29			
TEMPERATE		30			
TEMPERATE		31			
TEMPERATE		32			
TEMPERATE		33			
TEMPERATE		34			
TEMPERATE		35			
TEMPERATE		36			
TEMPERATE		37			
TEMPERATE		38			
TEMPERATE		39			
TEMPERATE		40			
TEMPERATE		41			
TEMPERATE		42			
TEMPERATE		43			
TEMPERATE		44			
	ALL	45	All panels opened for the inspection are closed and secure.		
	ALL	46	Run aircraft engine and leak check.		

DOI - CESSNA 206 SERIES - 1000 HOUR STRUCTURAL INSPECTION

NOTES:

UNITED STATES DEPARTMENT OF THE INTERIOR

CESSNA 206 SERIES

3000 HOUR STRUCTURAL MAINTENANCE CHECKS

THE INSPECTION WORK SHEETS / PACKAGES IN THIS DOCUMENT ARE FOR THE 'UNITED STATES DEPARTMENT OF THE INTERIOR' AIRCRAFT ONLY.

Inspection Sheet - Block Explanation

Example

ACFT TYPE		EXAMPLE INSPECTION REQUIREMENTS	MECH	INSP
ALL	1	Engine - Inspect for evidence of oil and fuel leaks. Wash engine/engine compartment if needed.		
H	2	Idle and Mixture Adjustment - Check idle speed and idle mixture (lean rise). Adjust if necessary.		
A,B,C,D,E,F	3	Turbocharger pressurized vent lines to fuel pump, discharge nozzles and fuel flow gage.	N/A	
A	**B**	**C**	**D**	**E**

Block A All - All Cessna aircraft in the 206 Series (all models).

Other than 'All' designated with the specific 206 model.

Block B Each inspection and task is given a line item number in the 2nd column.

Block C Describes inspection tasks.

Block D Mechanic sign-off block. N/A (Not Applicable) - should be used if the inspection cannot or should not be carried out due to (but not limited to) - 1. Serial number range. 2. Unit or option not installed on aircraft. 3. Previously complied with. 4. Climate zone applicability. A note beside the N/A to indicate the reason for it is recommended.

Block E The (white) INSP block should be initialed by an inspector who witnessed the task carried out by the mechanic and completed a final inspection and/or functional check in accordance with the line item requirements and relevant technical publications. The inspector shall not initial the INSP block until after the mechanic has initialed the MECH block. In a block that requires a Maintenance Inspector, he shall initial the white INSP block whenever N/A has been entered in the MECH block.

Climate Zone Supplemental Inspections and Servicing

Before commencing inspection and servicing, it must be confirmed which climate zone the subject aircraft is operated in. If the aircraft is above the 49th parallel it is in the Arctic Zone. If the aircraft is below the 49th parallel it is in the Temperate zone. The extra line items listed for the appropriate climate zone shall be added to the servicing, the not applicable climate zone line items shall be noted as N/A in the sign-off block.

Inspections: To be completed in accordance with this manual.

Repairs: To be completed in accordance with the appropriate Cessna Maintenance Manual.

Acronyms in use

IAW - In Accordance With

CPCP - Corrosion Prevention and Control Program

NDI - Non Destructive Inspection

ICA - Instructions for Continued Airworthiness

STC - Supplemental Type Certificate

PSE - Principle Structural Element

N/A - Not Applicable (see MECH Block D above)

OEM - Original Equipment Manufacturer

DOI - CESSNA 206 SERIES - 3000 HOUR STRUCTURAL INSPECTION

'N' NUMBER:_____ MODEL: _____ AIRCRAFT S/N:_____

TACH HOURS:_____ AIRCRAFT TOTAL TIME:_____ ENG. SMOH:_____ PROP SMOH:_____

ACFT TYPE		3000 HOUR STRUCTURAL INSPECTION REQUIREMENTS	MECH	INSP
ALL	1	Inspect nose landing gear torque links, bolts, bushings, and nose landing gear fork. Complete inspection as instructed below.		
TITLE		Nose Gear Torque Link, Bolt and Fork Inspection		

	206 S/N		
EFFECTIVITY	206-0001 thru 206-0275	P206-0001 thru P206-0160	U206-0276 thru U206-0437
	20608001 and On	P206-0161 thru P206-0519	U206-0438 thru U206-1234
	T20608001 and On	P206-0520 thru P20600647	U206-1235 thru U20603521
			U206-3522 thru U20607020

		MECH	INSP
PURPOSE	To ensure structural integrity of the nose gear torque links, bolts and nose gear fork.		
INSPECTION INSTRUCTIONS	A. Deflate the nose gear strut. Refer to appropriate manual for instructions.		
	B. Remove torque link bolts one at a time using the applicable Model 200 Series Service Manual as a guide.		
	(1) Clean areas before inspecting if grime or debris are present.		
	C. Inspect for bent bolts or worn bolts. Refer to the figure below.		
	D. Inspect torque links for cracks.		
	E. Inspect torque link bushings for excessive wear or deformation.		
	(1) Check clearance between the NAS bushings in the upper and lower torque link joints and the spacers. The ID for the bushing is 0.3750-0.3765 inches and the OD for the spacer is 0.3744-0.3750 inches. By design, the maximum clearance is 0.0021 inches. Use 0.005 inches as a wear limit.		
	(2) Check clearance between NAS bushing and bolt at joint joining upper and lower torque links. The ID for the bushing is 0.1900-0.1915 inches and the OD for the bolt is 0.1885-0.1894 inches. By design, the maximum clearance is 0.003 inches. Use 0.006 inches as wear limit		
	F. Install serviceable bolts after inspection.		
	G. Inspect the fork for cracking along the forging parting line.		
	(1) Clean areas before inspecting if grime or debris are present.		
	H. Support the forward fuselage.		
	I. Remove the bolts from the nose gear actuator retraction cylinder, one at a time, and check the bolts for straightness and deformation.		
	J. Reinstall the bolts and charge the oleo. Refer to appropriate manual for instructions.		

ACCESS AND DETECTABLE CRACK SIZE

ACCESS/LOCATION	DETECTABLE CRACK SIZE
Nose Gear Section	Not Allowed

INSPECTION METHOD	Visual

		MECH	INSP
REPAIR AND MODIFICATION	Replace bent bolts or worn bolts or bushings with new parts if wear limits are exceeded. A cracked fork or torque link is not repairable, and must be replaced. Make other repairs IAW the appropriate manual. Coordinate any repair not available in the manual with Cessna Customer Service prior to beginning the repair.		

DOI - CESSNA 206 SERIES - 3000 HOUR STRUCTURAL INSPECTION

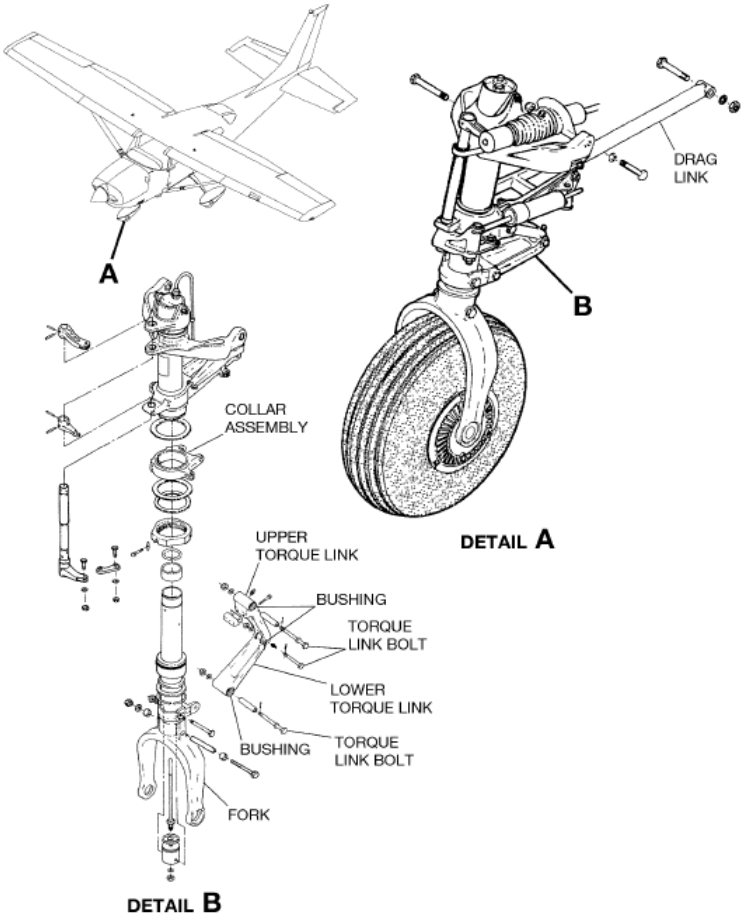

NOSE GEAR TORQUE LINK, BOLT AND FORK INSPECTION

ACFT TYPE		3000 HOUR INSPECTION REQUIREMENTS	MECH	INSP
206,A,B,C,D,E,F,H	2	Inspect rudder pedal torque tube and cable attachment arms. Complete inspection as instructed below.		
TITLE		Rudder Pedal Torque Tube Inspection		

	206 S/N		
EFFECTIVITY	206-0001 thru 206-0275	P206-0001 thru P206-0160	U206-0276 thru U206-0437
	20608001 and On	P206-0161 thru P206-0519	U206-0438 thru U206-1234
	T20608001 and On	P206-0520 thru P20600647	U206-1235 thru U20603521

		MECH	INSP
PURPOSE	To verify integrity of the rudder pedal torque tube assembly		
INSPECTION INSTRUCTIONS	A. Inspect rudder pedal torque tubes for rust, corrosion and/or cracking. Refer to the figure below.		
	(1) Clean area before inspecting if grime or debris is present.		
	B. Inspect the cable and pedal attachment arms for wear, cracks, and/or weld failures.		
	(1) Clean area before inspecting if grime or debris is present.		
	C. Inspect the rudder bar support brackets for cracks at the bend radii in the mounting flange.		
	D. Confirm the integrity of the cable and pedal attachments to the rudder bars.		

DOI - CESSNA 206 SERIES - 3000 HOUR STRUCTURAL INSPECTION

ACCESS AND DETECTABLE CRACK SIZE	
ACCESS/LOCATION	**DETECTABLE CRACK SIZE**
Fuselage, Near Forward Firewall	Not Allowed

INSPECTION METHOD	Visual

		MECH	INSP
REPAIR AND MODIFICATION	Typical failures occur at or close to welds in the rudder bar. Since the rudder bar is not heat treated after welding, it can be rewelded and used without subsequent heat treatment. Examine the rewelded area after welding for any new or additional cracking. Make other repairs by replacing damaged or missing parts with spare parts. Make repairs IAW the appropriate manual. Coordinate any repair not available in the manual with Cessna Customer Service prior to beginning the repair.		

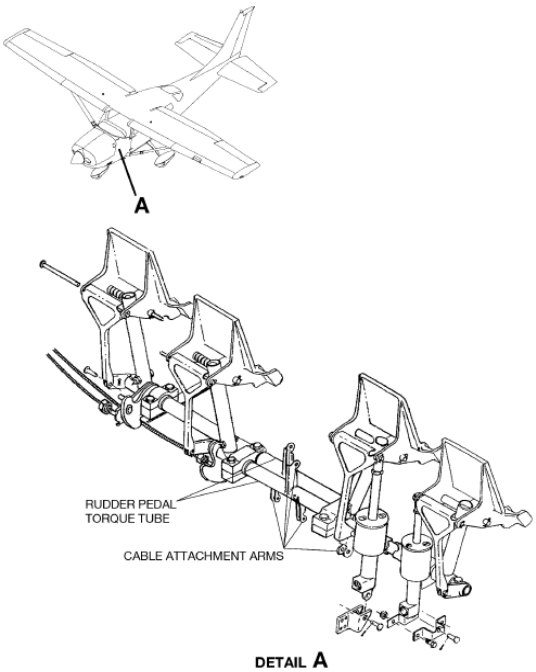

DETAIL A
RUDDER PEDAL TORQUE TUBE INSPECTION

ACFT TYPE		**3000 HOUR INSPECTION REQUIREMENTS**	MECH	INSP
G	3	Inspect rudder pedal torque tube and cable attachment arms. Complete inspection as instructed below.		
TITLE		Rudder Pedal Torque Tube Inspection		

EFFECTIVITY	**206 S/N**
	U206-3522 thru U20607020

PURPOSE	To verify integrity of the rudder pedal torque tube assembly.

		MECH	INSP
INSPECTION INSTRUCTIONS	A. Inspect rudder pedal torque tubes for rust, corrosion and/or cracking. Refer to the figure below.		
	(1) Clean area before inspecting if grime or debris is present.		
	B. Inspect the cable and pedal attachment arms for wear, cracks, and/or weld failures.		
	(1) Clean area before inspecting if grime or debris is present.		
	C. Inspect the rudder bar support brackets for cracks at the bend radii in the mounting flange.		

	MECH	INSP
D. Visually inspect the rod end assembly between rudder bar and bungee.		
(1) Clean area before inspecting if grime or debris is present.		
E. Confirm the integrity of the cable and pedal attachments to the rudder bars.		

ACCESS AND DETECTABLE CRACK SIZE

ACCESS/LOCATION	DETECTABLE CRACK SIZE
Fuselage, Near Forward Firewall	Not Allowed

INSPECTION METHOD	Visual

		MECH	INSP
REPAIR AND MODIFICATION	Typical failures occur at or close to welds in the rudder bar. Since the rudder bar is not heat treated after welding, it can be rewelded and used without subsequent heat treatment. Examine the rewelded area after welding for any new or additional cracking. Make other repairs by replacing damaged or missing parts with spare parts. Make repairs IAW the appropriate manual. Coordinate any repair not available in the manual with Cessna Customer Service prior to beginning the repair.		

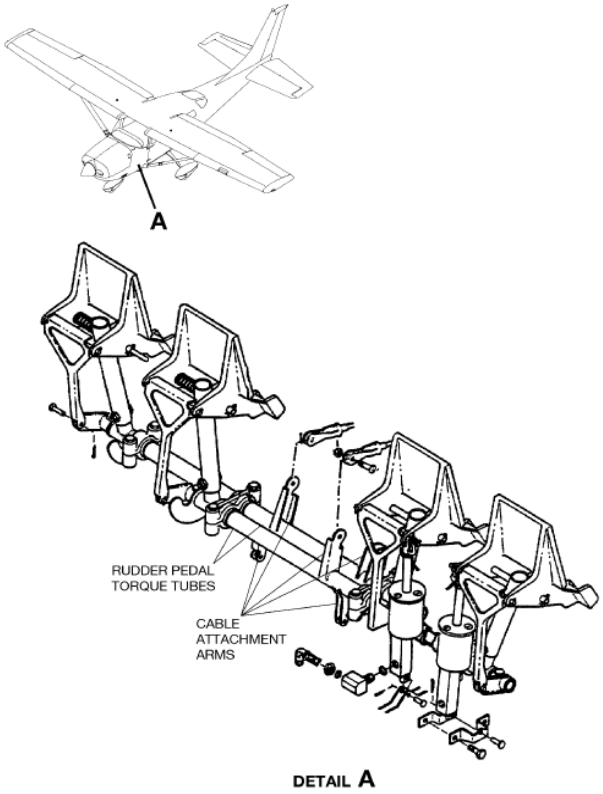

DETAIL A

RUDDER PEDAL TORQUE TUBE INSPECTION

ACFT TYPE		3000 HOUR INSPECTION REQUIREMENTS	MECH	INSP
A,B,C	4	Inspect horizontal stabilizer and elevator, including spars, ribs, hinge bolts, hinge bearing, attachments and torque tube. Complete inspection as instructed below.		
TITLE		Horizontal Stabilizer, Elevators and Attachments Inspection		

EFFECTIVITY	206 S/N	
	P206-0161 thru P206-419	U206-0438 thru U206-0914

DOI - CESSNA 206 SERIES - 3000 HOUR STRUCTURAL INSPECTION

PURPOSE	To inspect horizontal stabilizer, elevator and attachments for signs of damage, fatigue or deterioration.

		MECH	INSP
INSPECTION INSTRUCTIONS	A. Remove the elevators and stabilizer. Refer to appropriate manual for instructions.		
	NOTE: This requires removal of the vertical tail.		
	B. Open all stabilizer and elevator access panels. Refer to appropriate manual for instructions.		
	(1) Clean areas before inspecting if dirt and debris are present.		
	C. Visually inspect stabilizer and elevator for condition, cracks and security; hinge bolts, hinge bearings for condition and security; bearings for freedom of rotation; attach fittings for evidence of damage, wear, failed fasteners and security. Refer to the figure below. Pay particular attention to the flange riveted onto the torque tube near the airplane centerline, and the inside of the torque tube along the lower surface where water could accumulate.		
	(1) If corrosion or a frozen bearing is found, conduct a surface eddy current inspection for cracks of each elevator hinge attach fitting. Refer to appropriate manual for instructions. The inspection is for the aluminum structure outside of the bearing, so set the instrument for aluminum. The hinge may be replaced in lieu of eddy current testing.		
	D. Visually inspect the front and aft sides of the front spar. A flashlight and inspection mirror or a borescope will aid in this inspection.		
	E. Visually inspect forward and aft stabilizer and elevator spars, ribs, and attach fittings for cracks, corrosion, loose fasteners, elongated fastener attach holes, cracking and deterioration. Pay particular attention to the skins at the location where stringers pass through ribs and the leading edge skin close to the fuselage. Apply finger pressure at the stringer intersection or the rib to spar juncture to check for free play indicating a broken rib. Visually inspect the forward stabilizer attachment bulkhead and stabilizer attach fittings for loose rivets and cracks.		
	F. Inspection inside the stabilizer for corrosion		
	(1) Use a borescope to view the interior of the stabilizer. Access the interior through any available access holes, and through the lightening holes in the stabilizer rear spar.		
	(2) Pay particular attention to rivet butts and flanges containing rivets.		
	G. Install the horizontal stabilizer, elevator and all previously removed access panels. Refer to appropriate manual for instructions.		

ACCESS AND DETECTABLE CRACK SIZE

ACCESS/LOCATION	DETECTABLE CRACK SIZE
Horizontal Tail	Not Allowed

INSPECTION METHOD	Visual, and Eddy Current

		MECH	INSP
REPAIR AND MODIFICATION	Replace damaged bolts and nuts. Replace damaged fittings and small parts. Replace damaged or loose rivets. Repairs may be madeIAW the appropriate manual. Any repair not available in the manual should be coordinated with Cessna Customer Service prior to beginning the repair.		

DOI - CESSNA 206 SERIES - 3000 HOUR STRUCTURAL INSPECTION

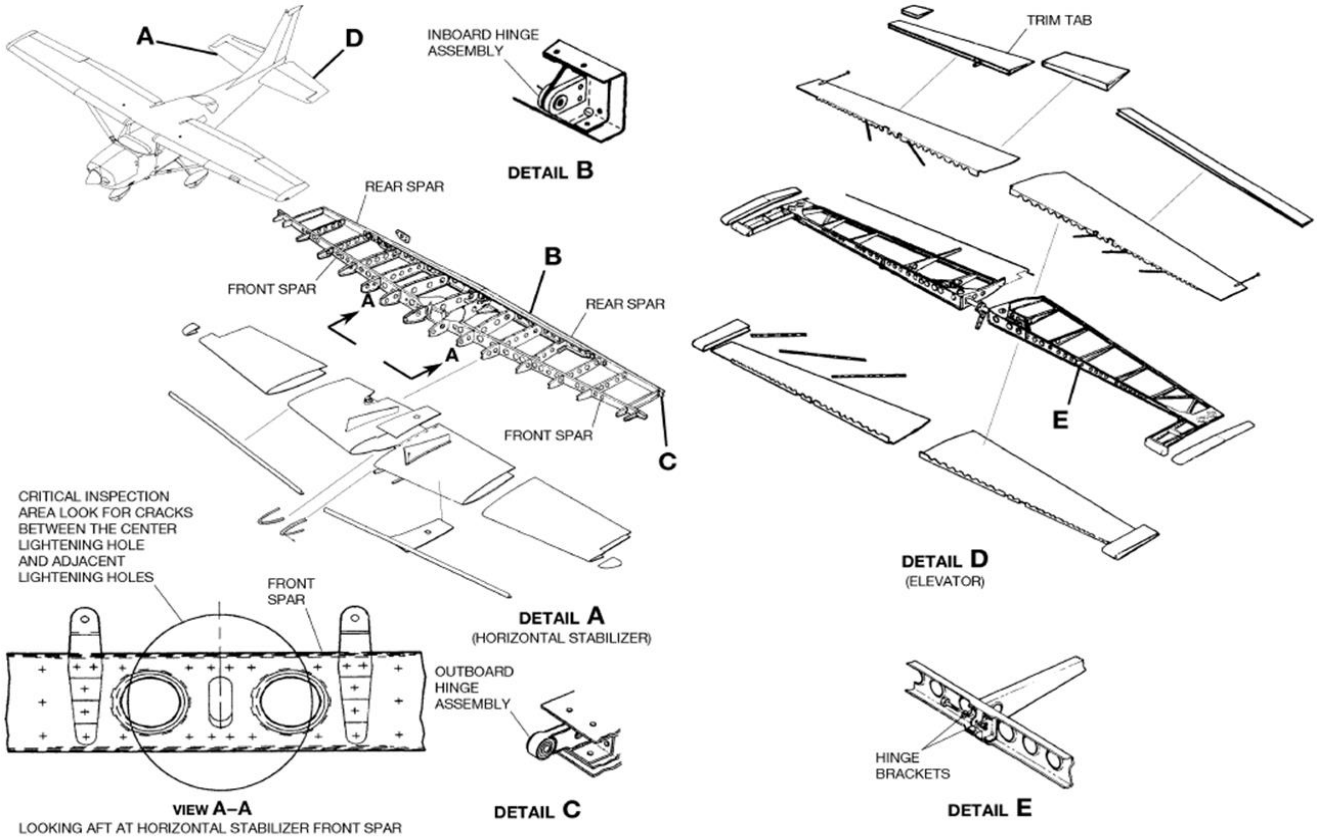

HORIZONTAL STABILIZER, ELEVATORS AND ATTACHMENTS INSPECTION

HORIZONTAL STABILIZER, ELEVATORS AND ATTACHMENTS INSPECTION

ACFT TYPE		3000 HOUR INSPECTION REQUIREMENTS	MECH	INSP
D,E,F	5	Inspect horizontal stabilizer and elevator, including spars, ribs, hinge bolts, hinge bearings, attach fittings and torque tube. Complete inspection as instructed below.		
TITLE		Horizontal Stabilizer, Elevators and Attachments Inspection		

EFFECTIVITY	**206 S/N**	
	P206-0520 thru P20600647	U206-1235 thru U20603521

PURPOSE	To inspect horizontal stabilizer, elevator and attachments for signs of damage, cracking or deterioration.

		MECH	INSP
INSPECTION INSTRUCTIONS	A. Remove the elevators and stabilizer. Refer to appropriate manual for instructions.		
	B. Open all stabilizer and elevator access panels. Refer to appropriate manual for instructions.		
	(1) Clean area before inspecting if grime or debris is present.		
	C. Visually inspect stabilizer and elevator for condition, cracks and security; hinge bolts, hinge bearings for condition and security; bearings for freedom of rotation; attach fittings for evidence of damage, cracks, wear, failed fasteners and security. Refer to the figure below.		
	(1) Clean area before inspecting if grime or debris is present.		
	D. Visually inspect the torque tube for corrosion and rivet security. Pay particular attention to the flange riveted onto the torque tube near the airplane centerline, and the inside of the torque tube along the lower surface where water could accumulate.		
	(1) Clean area before inspecting if grime or debris is present.		
	E. Review the aircraft records to determine if SE84-17 has been complied with. If it has NOT, carefully examine the reinforcement approximately 4 inches from the aircraft centerline on the stabilizer rear spar for cracks. Install the reinforcement if flight hours exceed 2,000 hours.		

	MECH	INSP
NOTE: If there is any doubt that SE84-17 has been complied with, the original reinforcement was aluminum, while the replacement is steel, so if the reinforcement is magnetic, the reinforcement has been replaced.		
F. Review the aircraft records to determine if SEB88-03 has been complied with, or Service Kit SK210-126 has been installed. If it has NOT, carefully examine the reinforcement approximately 3 inches from the aircraft centerline on the stabilizer front spar for cracks. Install the reinforcement if flight hours exceed 2,000 hours.		
NOTE: If there is any doubt that SEB88-03 has been complied with, the original reinforcement was smooth, while the replacement is stepped.		
G. Visually inspect forward and aft stabilizer and elevator spars, ribs and attach fittings for cracks, corrosion, loose fasteners, elongated fastener attach holes, cracking and deterioration. Pay particular attention to the skins at the location where stringers pass through ribs and at the leading edge skin close to the fuselage. Apply finger pressure at the stringer intersection or the rib to spar juncture to check for free play indicating a broken rib. Visually inspect the forward stabilizer attachment bulkhead and stabilizer attach fittings for loose rivets and cracks.		
(1) Clean area before inspecting if grime or debris is present.		
(2) Use a borescope if necessary to view the interior of the stabilizer through any available access holes and through the lightening holes in the stabilizer rear spar.		
(3) Visually inspect the front and aft sides of the front spar in the area of the three lightening holes close to the center of the stabilizer. A light and inspection mirror should be used to inspect the aft side of the spar. Cracks tend to be horizontal near the ends of the trim tab cable slot, but may be anywhere. Refer to the figure below, View A-A. The mostly hidden middle layer may also be cracked.		
H. If corrosion or a frozen bearing is found, conduct a surface eddy current inspection for cracks of each elevator hinge attach fitting. Refer to appropriate manual for instructions. The inspection is for the aluminum structure outside of the bearing, so set the instrument for aluminum. The hinge may be replaced in lieu of eddy current testing.		
I. Balance the elevator. Refer to appropriate manual for instructions.		
J. Install the horizontal stabilizer, elevator and all previously removed access panels. Refer to appropriate manual for instructions.		

ACCESS AND DETECTABLE CRACK SIZE

ACCESS/LOCATION	DETECTABLE CRACK SIZE
Horizontal Tail	Not Allowed

INSPECTION METHOD	Visual, Borescope and Eddy Current if required.

		MECH	INSP
REPAIR AND MODIFICATION	Replace damaged bolts and nuts. Replace damaged fittings and small parts. Replace damaged or loose rivets. If the front spar is cracked, a new front spar (P/N 1232622-23) is available to replace the older part. If the reinforcement on the rear spar is cracked, P/N 1232624-1 reinforcement is available to replace it. If the stabilizer attach fitting is cracked, SK210-126 is available to replace a cracked fitting. Hinge bearings are pre-packed with grease, which will eventually oxidize and harden after years of service. Several applications of penetrating oil will help free up a stiff bearing. It is the owner/operator option to replace stiff bearings. Modification Kit MK210-126 is available to repair damage to the horizontal tail front spar. Repairs may be made IAW the appropriate manual. Any repair not available in the manual should be coordinated with Cessna Customer Service prior to beginning the repair.		

DOI - CESSNA 206 SERIES - 3000 HOUR STRUCTURAL INSPECTION

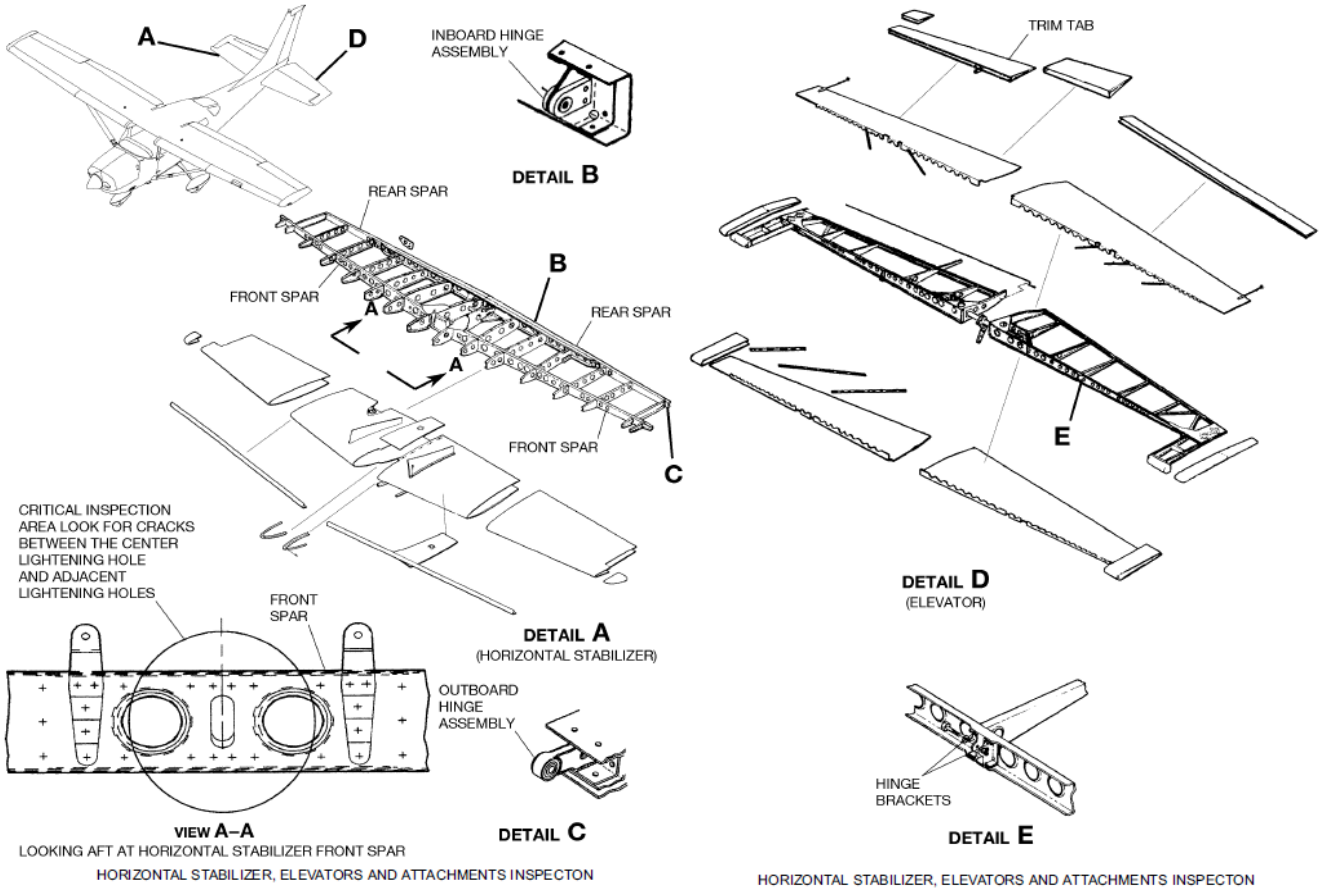

ACFT TYPE		3000 HOUR INSPECTION REQUIREMENTS	MECH	INSP
G	6	Inspect horizontal stabilizer and elevator, including spars, ribs, hinge bolts, hinge bearings, attach fittings and torque tube. Complete inspection as instructed below.		
TITLE		Horizontal Stabilizer, Elevators and Attachments Inspection		

EFFECTIVITY	**206 S/N**
	U206-3522 thru U20607020

PURPOSE	To inspect horizontal stabilizer, elevator and attachments for signs of damage, cracking or deterioration.

		MECH	INSP
INSPECTION INSTRUCTIONS	A. Remove the elevators and stabilizer. Refer to appropriate manual for instructions.		
	B. Open all stabilizer and elevator access panels. Refer to appropriate manual for instructions.		
	(1) Clean area before inspecting if grime or debris is present.		
	C. Visually inspect stabilizer and elevator for condition, cracks and security; hinge bolts, hinge bearings for condition and security; bearings for freedom of rotation; attach fittings for evidence of damage,cracks, wear, failed fasteners and security. Refer to the figure below.		
	(1) Clean area before inspecting if grime or debris is present.		
	D. Visually inspect the torque tube for corrosion and rivet security. Pay particular attention to the flange riveted onto the torque tube near the airplane centerline, and the inside of the torque tube along the lower surface where water could accumulate.		
	(1) Clean area before inspecting if grime or debris is present.		

	MECH	INSP
E. For units U206-3522 thru U20606832, review the aircraft records to determine if SE84-17 has been complied with. If it has NOT, carefully examine the reinforcement approximately 4 inches from the aircraft centerline on the stabilizer rear spar for cracks. Install the reinforcement if flight hours exceed 2,000 hours.		
NOTE: If there is any doubt that SE84-17 has been complied with, the original reinforcement was aluminum, while the replacement is steel, so if the reinforcement is magnetic, the reinforcement has been replaced.		
F. Review the aircraft records to determine if SEB88-03 has been complied with, or Service Kit SK210-126 has been installed. If it has NOT, carefully examine the reinforcement approximately 3 inches from the aircraft centerline on the stabilizer front spar for cracks. Install the reinforcement if flight hours exceed 2,000 hours.		
NOTE: If there is any doubt that SEB88-03 has been complied with, the original reinforcement was smooth, while the replacement is stepped.		
G. Visually inspect forward and aft stabilizer and elevator spars, ribs and attach fittings for cracks, corrosion, loose fasteners, elongated fastener attach holes, cracking and deterioration. Pay particular attention to the skins at the location where stringers pass through ribs and at the leading edge skin close to the fuselage. Apply finger pressure at the stringer intersection or the rib to spar juncture to check for free play indicating a broken rib. Visually inspect the forward stabilizer attachment bulkhead.		
(1) Clean area before inspecting if grime or debris is present.		
(2) Use a borescope if necessary to view the interior of the stabilizer through any available access holes and through the lightening holes in the stabilizer rear spar.		
(3) Visually inspect the front and aft sides of the front spar in the area of the three lightening holes close to the center of the stabilizer. A light and inspection mirror should be used to inspect the aft side of the spar. Cracks tend to be horizontal near the ends of the trim tab cable slot, but may be anywhere. Refer to the figure below, View A-A. The mostly hidden middle layer may also be cracked.		
H. If corrosion or a frozen bearing is found, conduct a surface eddy current inspection for cracks of each elevator hinge attach fitting. Refer to appropriate manual for instructions. The inspection is for the aluminum structure outside of the bearing, so set the instrument for aluminum. The hinge may be replaced in lieu of eddy current testing.		
I. Balance the elevator. Refer to appropriate manual for instructions.		
J. Install the horizontal stabilizer, elevator and all previously removed access panels. Refer to appropriate manual for instructions.		

ACCESS AND DETECTABLE CRACK SIZE

ACCESS/LOCATION	DETECTABLE CRACK SIZE
Horizontal Tail	Not Allowed

INSPECTION METHOD	Visual, Borescope and Eddy Current if required.

		MECH	INSP
REPAIR AND MODIFICATION	Replace damaged bolts and nuts. Replace damaged fittings and small parts. Replace damaged or loose rivets. If the front spar is cracked, a new front spar (P/N 1232622-23) is available to replace the older part. If the reinforcement on the rear spar is cracked, P/N 1232624-1 reinforcement is available to replace it. If the stabilizer attach fitting is cracked, SK210-126 is available to replace a cracked fitting. Hinge bearings are prepacked with grease, which will eventually oxidize and harden after years of service. Several applications of penetrating oil will help free up a stiff bearing. It is the owner/operator option to replace stiff bearings. Modification Kit MK210-126 is available to repair damage to the horizontal tail front spar. Repairs may be made IAW the appropriate manual. Any repair not available in the manual should be coordinated with Cessna Customer Service prior to beginning the repair.		

DOI - CESSNA 206 SERIES - 3000 HOUR STRUCTURAL INSPECTION

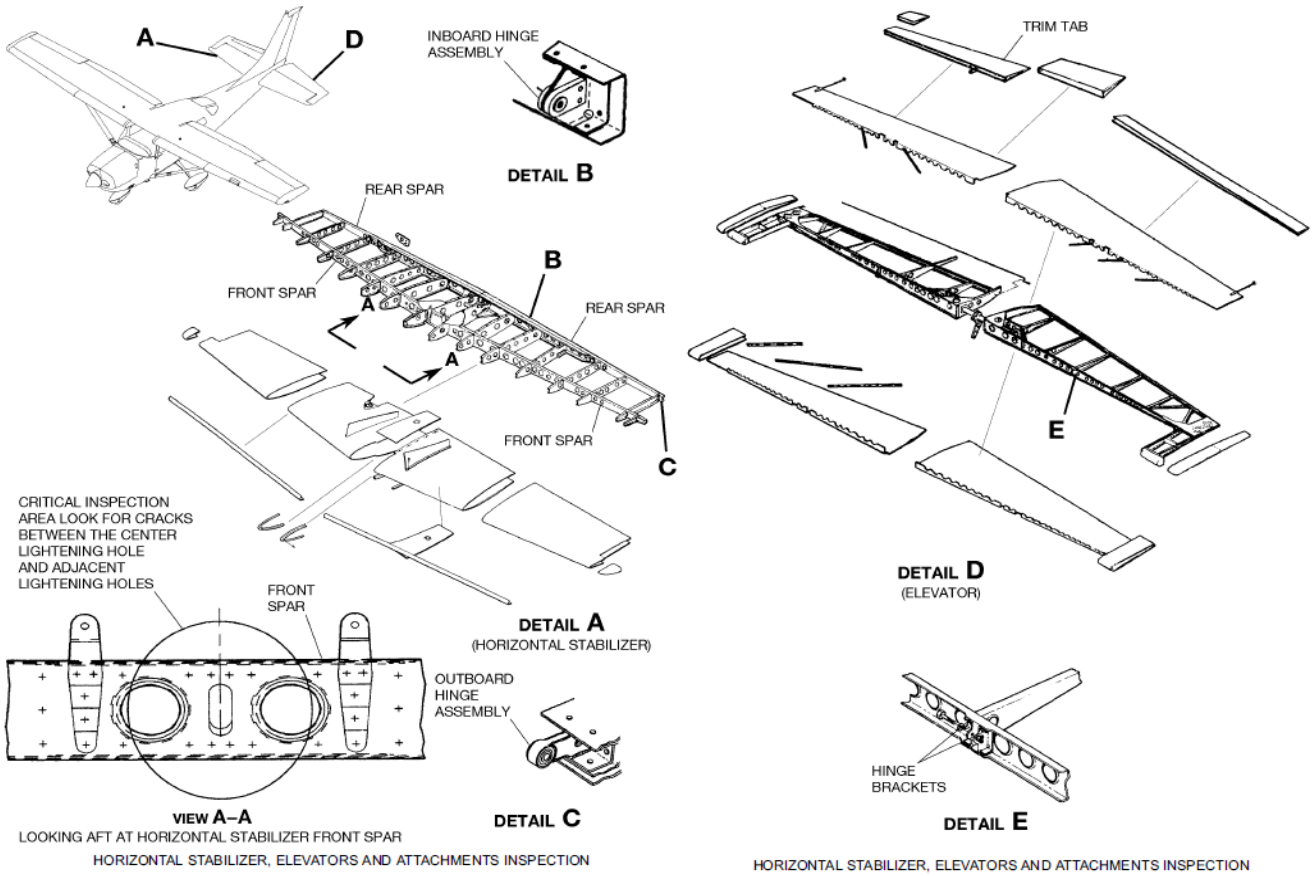

ACFT TYPE		3000 HOUR INSPECTION REQUIREMENTS	MECH	INSP
H	7	Inspect the horizontal stabilizer and elevator, including spars, ribs, hinge bolts, hinge bearings, attach fittings and torque tube. Complete inspection as instructed below.		
TITLE		H - Horizontal Stabilizer, Elevators and Attachments Inspection		

EFFECTIVITY	**206 S/N**	
	20608001 and On	T20608001 and On

PURPOSE	To inspect horizontal stabilizer, elevator and attachments for signs of damage, cracking or deterioration.

		MECH	INSP
INSPECTION INSTRUCTIONS	A. For airplanes affected by Service Bulletin SB00-55-03, review the airplane maintenance records to verify that Service Bulletin SB00-55-03 has been complied with. For airplanes affected by Service Bulletin SB00-55-03 but are not in compliance with this service bulletin, comply with SB00-55-03 concurrent with this inspection.		
	B. Remove all stabilizer and elevator access panels, including the stinger and vertical stabilizer to horizontal stabilizer fairings. Refer to appropriate manual for instructions and the figure below.		
	C. Do a visual inspection of the stabilizer and elevator for condition, cracks and security; hinge bolts, hinge bearings for condition and security, bearings for freedom of rotation, attach fittings for evidence of damage, cracks, wear, failed fasteners and security.		
	(1) Clean the area before inspecting if grime or debris is present.		
	D. Visually inspect the torque tube for corrosion and rivet security. Pay particular attention to the flange riveted onto the torque tube near the airplane centerline and the inside of the torque tube along the lower surface where water could accumulate.		
	(1) Clean the area before inspecting if grime or debris is present.		

	MECH	INSP
E. Visually inspect the forward and aft stabilizer and elevator spars, ribs and attach fittings for cracks, corrosion, loose fasteners, elongated fastener attach holes, cracking and deterioration. Pay particular attention to the skins at the location where stringers pass through ribs and at the leading edge skin close to the fuselage. Apply finger pressure at the stringer intersection or the rib to spar juncture to check for free play indicating a broken rib. Visually inspect the forward stabilizer attachment bulkhead for cracks.		
(1) Clean the area before inspecting if grime or debris is present.		
(2) Use a borescope if necessary to view the interior of the stabilizer through any available access holes and through the lightening holes in the stabilizer rear spar.		
(3) Visually inspect the front and aft sides of the front spar in the area of the three lightening holes close to the center of the stabilizer. A light and inspection mirror should be used to inspect the aft side of the spar. Cracks tend to be horizontal near the ends of the trim tab cable slot, but may be anywhere.		
F. If corrosion or a frozen bearing is found, conduct a surface eddy current inspection for cracks of each elevator hinge attach fitting. Refer to appropriate manual for instructions. The inspection is for the aluminum structure outside of the bearing, make sure the instrument is set for inspecting aluminum material. The hinge may be replaced in lieu of this eddy current test.		
G. Visually inspect the trailing edge portion of the elevator for indications of cracks, corrosion or deterioration. Visually inspect the attachment of the trim tab horn to the trim tab.		
H. Install the items that were removed to accomplish this inspection, refer to the applicable sections of this manual.		

ACCESS AND DETECTABLE CRACK SIZE

ACCESS/LOCATION	DETECTABLE CRACK SIZE
Horizontal Stabilizer	Not Allowed

INSPECTION METHOD	Visual, Borescope and Eddy Current if required.

		MECH	INSP
REPAIR AND MODIFICATION	Replace damaged bolts and nuts. Replace damaged fittings and small parts. Replace damaged or loose rivets. Several applications of penetrating oil will help free up a stiff bearing. It is the owner/operator option to replace stiff bearings. Make repairs IAW the appropriate manual. Coordinate any repair not available in the manual with Cessna Customer Service prior to beginning the repair.		

DOI - CESSNA 206 SERIES - 3000 HOUR STRUCTURAL INSPECTION

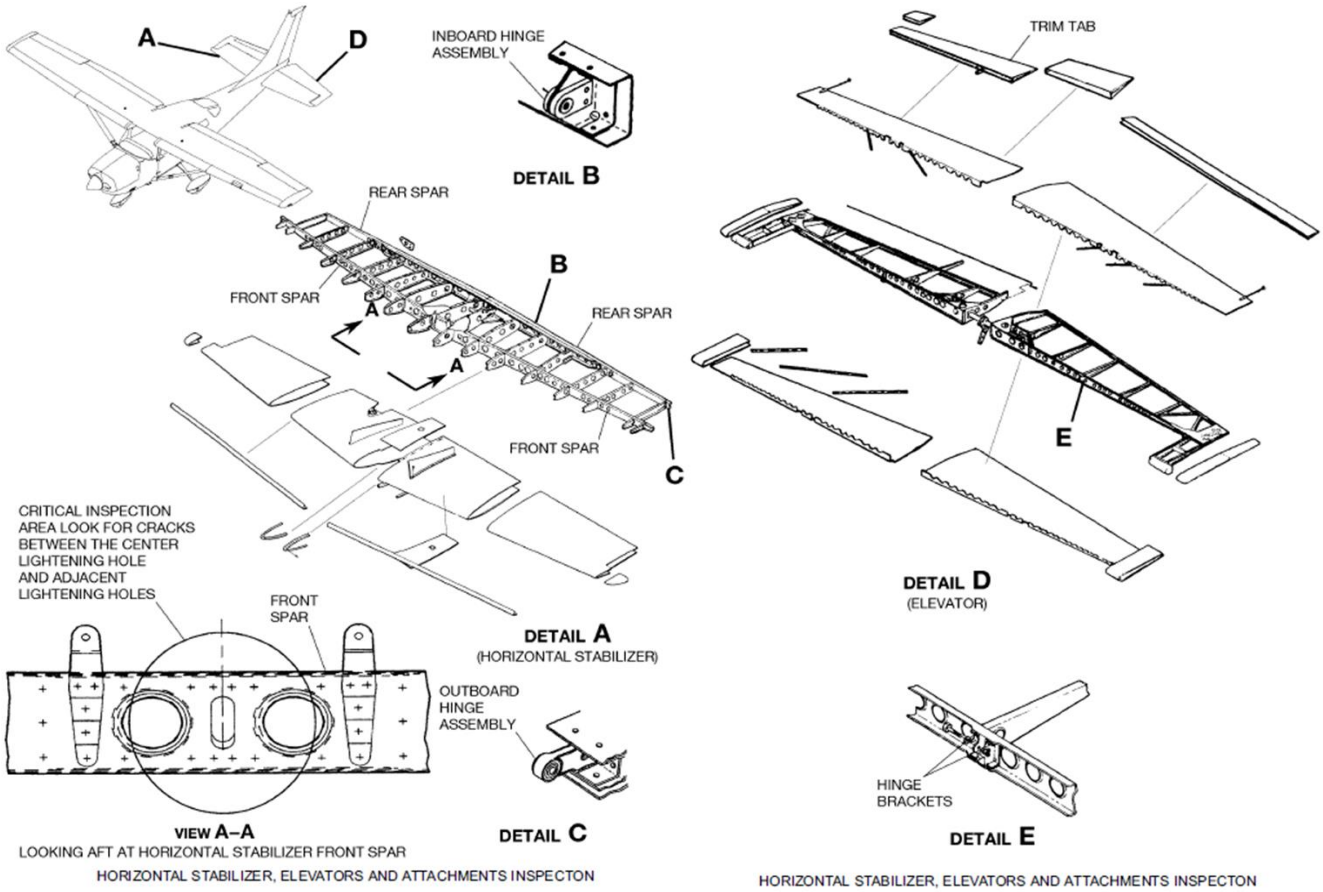

ACFT TYPE		3000 HOUR INSPECTION REQUIREMENTS	MECH	INSP
206	8	Inspect horizontal stabilizer and elevator, including spars, ribs, hinge bolts, hinge bearings, and attach fittings. Complete inspection as instructed below.		
TITLE		Elevator and Trim Tab Inspection		

EFFECTIVITY	**206 S/N**
	21057001 thru 21058715

PURPOSE	To inspect elevator with foam in trailing edge and elevator trim tab that is foam filled for signs of corrosion, cracking or deterioration.

		MECH	INSP
INSPECTION INSTRUCTIONS	**NOTE:** If elevator and trim tab have both been replaced with parts without foam, this inspection is complete.		
	A. Visually inspect elevator trim tab for corrosion, cracks and security. Refer to the figure below. Pay particular attention for indications of internal corrosion (pin holes, discoloration, cracks). Evidence of internal skin to foam separation, soft spots, paint blisters, unsealed edges of exposed foam, deterioration of foam, or corrosion are cause for replacement of the assembly.		
	(1) If trim tab is foam filled, replace trim tab with a tab that is not foam filled.		
	B. Visually inspect the attachment of the trim tab horn to the trim tab.		
	C. Visually inspect the trailing edge portion of the elevator for indications of internal corrosion damage or separation of the foam core from the skin. Pay particular attention for indications of internal corrosion (pin holes, discoloration, cracks). Evidence of internal skin to foam separation, soft spots, paint blisters, unsealed edges of exposed foam, deterioration of foam, or corrosion are cause for replacement of the assembly.		

	MECH	INSP
D. Rebalance elevator. Refer to appropriate manual for instructions.		

ACCESS AND DETECTABLE CRACK SIZE

ACCESS/LOCATION	DETECTABLE CRACK SIZE
Horizontal Tail	Not Allowed

INSPECTION METHOD	Visual

		MECH	INSP
REPAIR AND MODIFICATION	Replace any foam filled trim tab with one that is not foam filled. Replace corroded elevators with elevators not containing foam in trailing edges.		

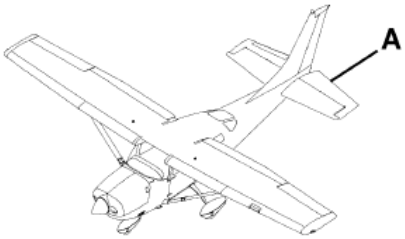

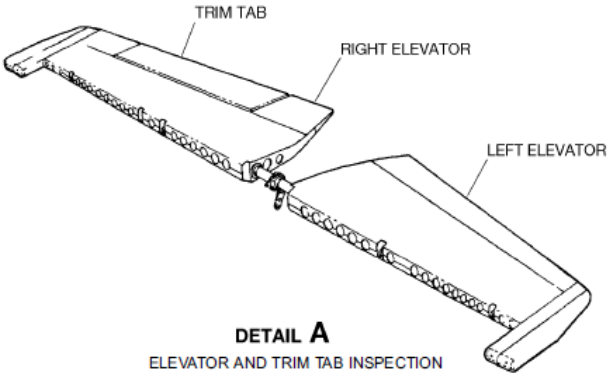

DETAIL A
ELEVATOR AND TRIM TAB INSPECTION

ACFT TYPE		3000 HOUR INSPECTION REQUIREMENTS	MECH	INSP
A,B,C	9	Inspect horizontal stabilizer and elevator, including spars, ribs, hinge bolts, hinge bearings, and attach fittings. Complete inspection as instructed below.		
TITLE		Horizontal Stabilizer, Elevators and Attachments Inspection		

	206 S/N	
EFFECTIVITY	P206-420 thru P206-0519	U206-0915 thru U206-1234

PURPOSE	To inspect horizontal stabilizer, elevator and attachments for signs of damage, fatigue or deterioration.

		MECH	INSP
INSPECTION INSTRUCTIONS	A. Remove the elevators and stabilizer. Refer to appropriate manual for instructions.		
	NOTE: This requires removal of the vertical and horizontal stabilizers.		
	B. Open all stabilizer and elevator access panels.		
	(1) Clean areas before inspecting if dirt and debris are present.		

	MECH	INSP
C. Visually inspect stabilizer and elevator for condition, cracks and security; hinge bolts, hinge bearings for condition and security; bearings for freedom of rotation; attach fittings for evidence of damage, wear, failed fasteners and security. Refer to the figure below. Pay particular attention to the flange riveted onto the torque tube near the airplane centerline, and the inside of the torque tube along the lower surface where water could accumulate.		
(1) If corrosion or a frozen bearing is found, conduct a surface eddy current inspection for cracks of each elevator hinge attach fitting. Refer to appropriate manual for instructions. The inspection is for the aluminum structure outside of the bearing, so set the instrument for aluminum. The hinge may be replaced in lieu of eddy current testing.		
D. Review the aircraft records to determine if SE84-17 has been complied with, if applicable. If it has NOT, carefully examine the reinforcement approximately 4 inches from the aircraft centerline on the stabilizer rear spar for cracks.		
NOTE: If there is any doubt that SE84-17 has been complied with, the original reinforcement was aluminum, while the replacement is steel, so if the reinforcement is magnetic, the reinforcement has been replaced.		
F. Review the aircraft records to determine if SEB88-03 has been complied with. If it has NOT, carefully examine the reinforcement approximately 3 inches from the aircraft centerline on the stabilizer front spar for cracks.		
NOTE: If there is any doubt that SEB88-03 has been complied with, the original reinforcement was smooth, while the replacement is stepped.		
G. Visually inspect forward and aft stabilizer and elevator spars, ribs, and attach fittings for cracks, corrosion, loose fasteners, elongated fastener attach holes, cracking and deterioration. Pay particular attention to the skins at the location where stringers pass through ribs and the leading edge skin close to the fuselage. Apply finger pressure at the stringer intersection or the rib to spar juncture to check for free play indicating a broken rib. Visually inspect the forward stabilizer attachment bulkhead and stabilizer attach fittings for loose rivets and cracks.		
H. Inspection of the inside in the stabilizer for corrosion.		
(1) Use a borescope to view the interior of the stabilizer. Access the interior through any available access holes, and through the lightening holes in the stabilizer rear spar.		
(2) Pay particular attention to rivet butts and flanges containing rivets.		
I. Install the horizontal stabilizer, elevator and all previously removed access panels. Refer to appropriate manual for instructions.		

ACCESS AND DETECTABLE CRACK SIZE

ACCESS/LOCATION	DETECTABLE CRACK SIZE
Horizontal Tail	Not Allowed

INSPECTION METHOD	Visual, and Eddy Current

		MECH	INSP
REPAIR AND MODIFICATION	Replace damaged bolts and nuts. Replace damaged fittings and small parts. Hinge bearings are prepacked with grease, which will eventually oxidize and harden after years of service. Several applications of penetrating oil will help free up a stiff bearing. It is the owner/operator option to replace stiff bearings. Modification Kit MK210-126 is available to repair damage to the horizontal tail front spar. Repairs may be made IAW the appropriate manual. Any repair not available in the manual should be coordinated with Cessna Customer Service prior to beginning the repair.		

DOI - CESSNA 206 SERIES - 3000 HOUR STRUCTURAL INSPECTION

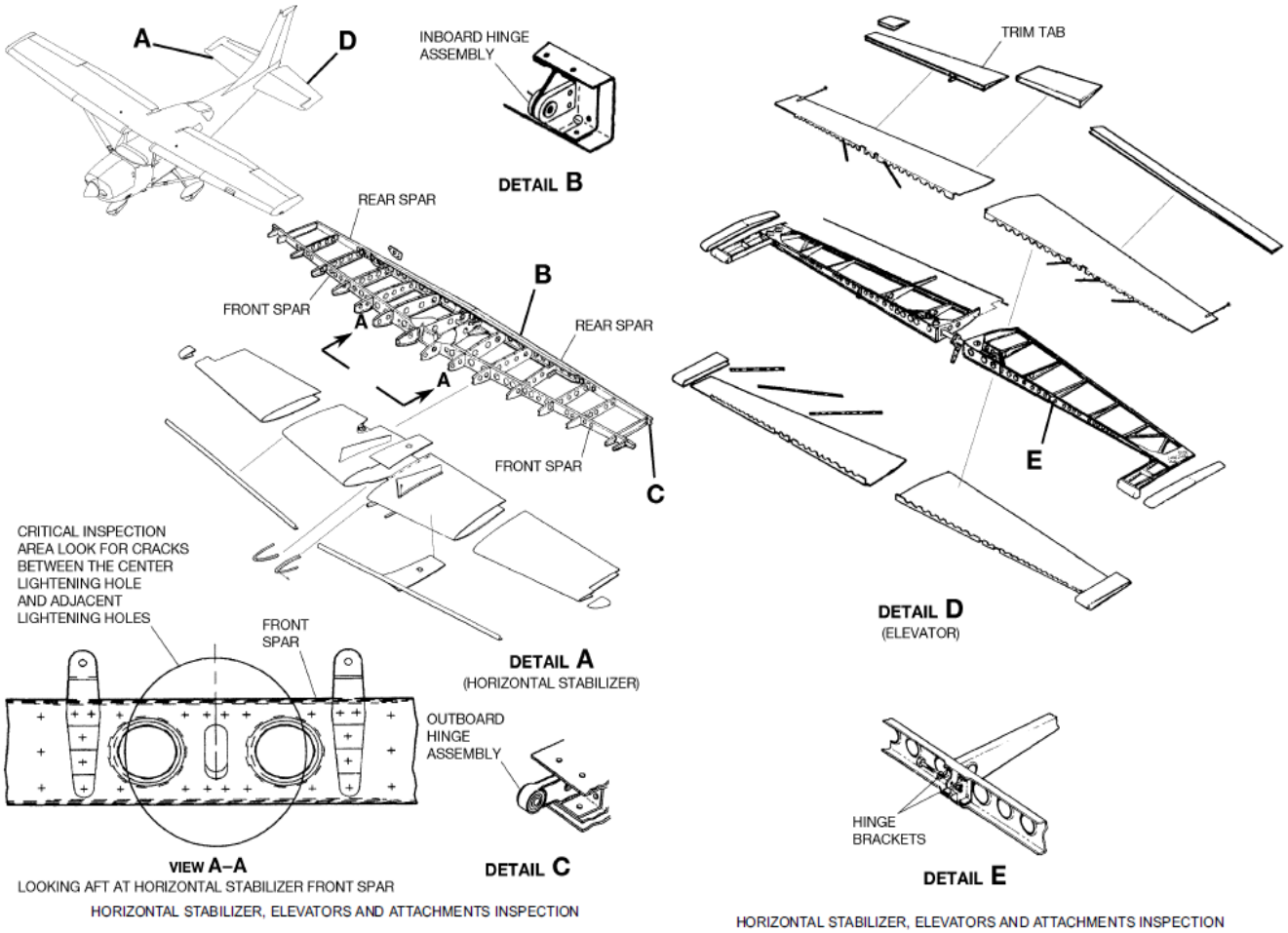

ACFT TYPE		3000 HOUR INSPECTION REQUIREMENTS	MECH	INSP
A,B,C,D,E,F,G, H	10	Inspect vertical stabilizer and rudder including spars, ribs, hinge bolts, hinge bearings and attach fittings. Complete inspection as instructed below.		
TITLE		Vertical Stabilizer, Rudder and Attachments Inspection		

	206 S/N		
EFFECTIVITY	20608001 and On	P206-0161 thru P206-0519	U206-0438 thru U206-1234
	T20608001 and On	P206-0520 thru P20600647	U206-1235 thru U20603521
			U206-3522 thru U20607020

		MECH	INSP
PURPOSE	To inspect vertical stabilizer, rudder and attachments for signs of damage, cracks or deterioration.		
INSPECTION INSTRUCTIONS	A. Remove rudder from airplane and open all vertical stabilizer and rudder access panels. Refer to appropriate manual for instructions.		
	B. Visually inspect vertical stabilizer and rudder for condition, cracks and security; rudder hinges for condition, cracks and security; hinge bolts, hinge bearings for condition and security; bearings for freedom of rotation; attach fittings for evidence of damage, wear, failed fasteners and security. Refer to the figure below.		
	(1) Clean area before inspecting if grime or debris is present.		
	C. Using a borescope, inspect forward and aft vertical stabilizer and rudder spars, ribs and attach fittings for cracks, corrosion, loose fasteners, elongated fastener attach holes, cracks and deterioration.		
	(1) Clean area before inspecting if grime or debris is present.		

	MECH	INSP
D. Inspect rudder for deterioration resulting from fatigue, wear, overload, wind damage, and corrosion.		
E. Inspect skins, spars, and ribs for cracks, corrosion and working fasteners. Pay particular attention to the skins at the location where stringers pass through ribs. Apply finger pressure at the intersection to check for free play indicating a broken rib.		
F. If corrosion or a frozen bearing is found in B. above, replace the rudder hinge or conduct a surface eddy current inspection for cracks of each rudder hinge attach fitting. Refer to appropriate manual for instructions. The inspection is for the aluminum structure outside of the bearing, so set the instrument for aluminum.		
G. Install rudder and all previously removed access panels. Refer to appropriate manual for instructions.		

ACCESS AND DETECTABLE CRACK SIZE

ACCESS/LOCATION	DETECTABLE CRACK SIZE
Vertical Stabilizer, Rudder and Stabilizer Attachment	Not Allowed

INSPECTION METHOD	Visual with Eddy Current if required

		MECH	INSP
REPAIR AND MODIFICATION	Replace damaged bolts and nuts. Replace damaged fittings and small parts. Replace damaged or loose rivets. Hinge bearings are prepacked with grease, which will eventually oxidize and harden after years of service. Several applications of penetrating oil will help free up a stiff bearing. It is the owner/operators option to replace stiff bearings. Repairs may be made IAW the appropriate manual. Any repair not available in the manual should be coordinated with Cessna Customer Service prior to beginning the repair.		

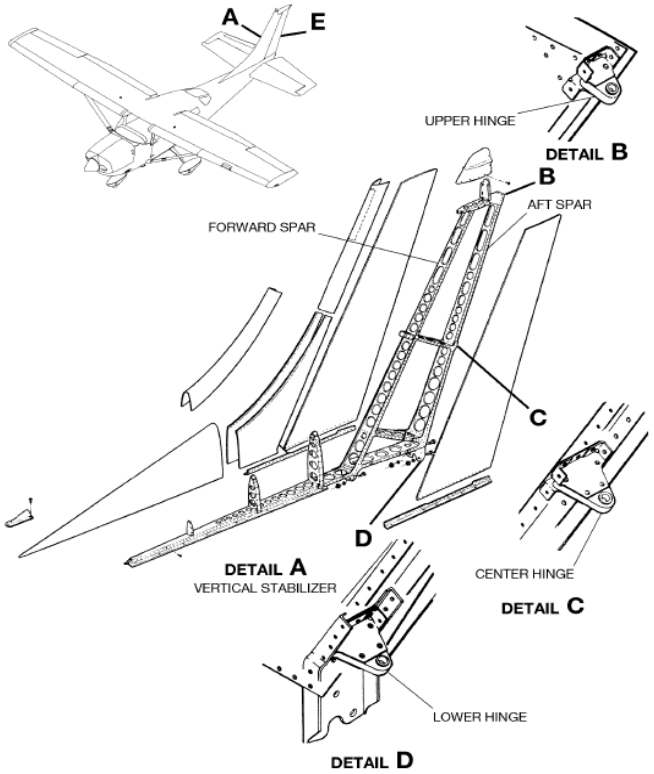

VERTICAL STABILIZER, RUDDER AND ATTACHMENTS INSPECTION

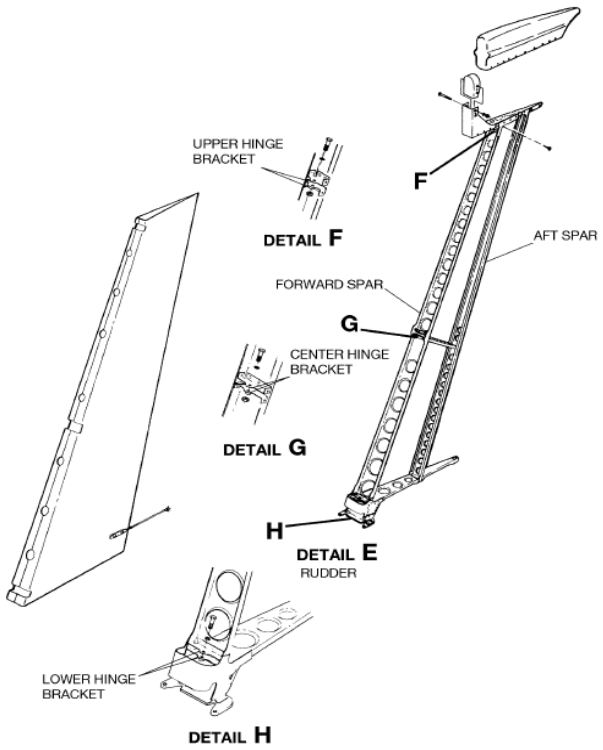

VERTICAL STABILIZER, RUDDER AND ATTACHMENTS INSPECTION

DOI - CESSNA 206 SERIES - 3000 HOUR STRUCTURAL INSPECTION

ZONE	ACFT TYPE		3000 HOUR STRUCTURAL INSPECTION REQUIREMENTS	MECH	INSP
ARCTIC		11			
ARCTIC		12			
ARCTIC		13			
ARCTIC		14			
ARCTIC		15			
ARCTIC		16			
ARCTIC		17			
ARCTIC		18			
ARCTIC		19			
ARCTIC		20			
ARCTIC		21			
ARCTIC		22			
ARCTIC		23			
TEMPERATE		24			
TEMPERATE		25			
TEMPERATE		26			
TEMPERATE		27			
TEMPERATE		28			
TEMPERATE		29			
TEMPERATE		30			
TEMPERATE		31			
TEMPERATE		32			
TEMPERATE		33			
TEMPERATE		34			
TEMPERATE		35			
TEMPERATE		36			
TEMPERATE		37			
TEMPERATE		38			
TEMPERATE		39			
	ALL	40	All panels opened for the inspection are closed and secure.		
	ALL	41	Run aircraft engine and leak check.		

DOI - CESSNA 206 SERIES - 3000 HOUR STRUCTURAL INSPECTION

NOTES: